STATE OF CALIFORNIA • DEPARTMENT OF TRANSPORTATION

TECHNICAL REPORT DOCUMENTATION PAGE

TR0003 (REV 10/98)

ADA Notice

For individuals with sensory disabilities, this document is available in alternate formats. For information call (916) 654-6410 or TDD (916) 654-3880 or write Records and Forms Management, 1120 N Street, MS-89, Sacramento, CA 95814.

1. REPORT NUMBER FHWA/CA12-0181	2. GOVERNMENT ASSOCIATION NUMBER	3. RECIPIENT'S CATALOG NUMBER
4. TITLE AND SUBTITLE Development of a New Guardrail End Treatment: Self-restoring Impact Attenuator		5. REPORT DATE May 2012
		6. PERFORMING ORGANIZATION CODE Roadside Safety Research Group
7. AUTHOR Christopher Caldwell		8. PERFORMING ORGANIZATION REPORT NO.
9. PERFORMING ORGANIZATION NAME AND ADDRESS Roadside Safety Research Group California Department of Transportation 5900 Folsom Blvd. Sacramento CA. 95819		10. WORK UNIT NUMBER
		11. CONTRACT OR GRANT NUMBER CA12-0181
12. SPONSORING AGENCY AND ADDRESS California Department of Transportation 5900 Folsom Blvd. Sacramento CA. 95819		13. TYPE OF REPORT AND PERIOD COVERED Final
		14. SPONSORING AGENCY CODE

15. SUPPLEMENTARY NOTES

This project was performed in cooperation with the US Department of Transportation, Federal Highway Administration, under the research project titled “DEVELOPMENT OF A SELF-RESTORING IMPACT ATTENUATOR: SPR-3(043)”.

16. ABSTRACT

This report explains the history of the “Development of a New Guardrail End Treatment” project, what was accomplished, what problems were encountered, and why it was ultimately terminated. This report will also provide a summary of proprietary products that are currently available on the market that meet most of the initial and/or final design criteria. It is the hope of the authors that lessons learned from the problems encountered in this project will be of value in future roadside safety research.

17. KEY WORDS End Treatments, Crash Cushion, Attenuator, End Terminal, self-restoring	18. DISTRIBUTION STATEMENT No restrictions. This document is available through the National Technical Information Service, Springfield, VA 22161	
19. SECURITY CLASSIFICATION *(of this report)* Unclassified	20. NUMBER OF PAGES 84	21. COST OF REPORT CHARGED

Reproduction of completed page authorized.

DISCLAIMER STATEMENT

This document is disseminated in the interest of information exchange. The contents of this report reflect the views of the authors who are responsible for the facts and accuracy of the data presented herein. The contents do not necessarily reflect the official views or policies of the State of California or the Federal Highway Administration. This publication does not constitute a standard, specification or regulation. This report does not constitute an endorsement by the Department of any product described herein.

For individuals with sensory disabilities, this document is available in Braille, large print, audiocassette, or compact disk. To obtain a copy of this document in one of these alternate formats, please contact: the Division of Research and Innovation, MS-83, California Department of Transportation, P.O. Box 942873, Sacramento, CA 94273-0001.

DEVELOPMENT OF A NEW GUARDRAIL END TREATMENT: SELF-RESTORING IMPACT ATTENUATOR

A FINAL REPORT FOR THE

FHWA REGIONAL POOLED FUND STUDY SPR-3(043)

STATE OF CALIFORNIA
DEPARTMENT OF TRANSPORTATION
DIVISION OF RESEARCH AND INNOVATION
OFFICE OF SAFETY INNOVATION AND COOPERATIVE RESEARCH

Supervised By ..... Joseph W. Horton, P.E.

Principal Investigator ..... John Jewell, P.E.

Report Prepared By ..... Christopher Caldwell

Research Performed By ..... Roadside Safety Research Group

STATE OF CALIFORNIA
DEPARTMENT OF TRANSPORTATION
DIVISION OF RESEARCH AND INNOVATION
OFFICE OF SAFETY INNOVATION AND COOPERATIVE RESEARCH

DEVELOPMENT OF A NEW GUARDRAIL END TREATMENT: SELF-RESTORING IMPACT ATTENUATOR

A FINAL REPORT OF THE

FHWA REGIONAL POOLED FUND STUDY SPR-3(043)

Supervised By ..... Joseph W. Horton, P.E.

Principal Investigator ..... John Jewell, P.E.

Report Prepared By ..... Christopher Caldwell

Research performed By ..... Roadside Safety Research Group

JOSEPH W. HORTON, Office Chief
Office of Safety Innovation and
Cooperative Research

ROBERT MELINE, Branch Chief
Office of Safety Innovation and
Cooperative Research
Roadside Safety Research Group

JOHN JEWELL, Specialist
Office of Safety Innovation and
Cooperative Research
Roadside Safety Research Group

CHRISTOPHER CALDWELL
Office of Safety Innovation and
Cooperative Research
Roadside Safety Research Group

ENGLISH TO METRIC SYSTEM (SI) OF MEASUREMENT

SI CONVERSION FACTORS

To Convert From	To	Multiply By
	ACCELERATION	
m/s^2	ft/s^2	3.281
	AREA	
m^2	ft^2	10.76
	ENERGY	
Kilojoule (J)	kip-ft	0.7376
	FORCE	
Newton (N)	lb_f	0.2248
	LENGTH	
m	ft	3.281
m	in	39.37
cm	in	0.3937
mm	in	0.03937
	MASS	
kg	lb_m	2.205
	PRESSURE OR STRESS	
kPa	psi	0.1450
	VELOCITY	
km/h	mph	0.6214
m/s	ft/s	3.281
km/h	ft/s	0.9113

ACKNOWLEDGEMENTS

Special thanks and appreciation is due to the following:

United States Department of Transportation, Federal Highway Administration, Connecticut Department of Transportation, Illinois Department of Transportation, Montana Department of Transportation, Nevada Department of Transportation, New York State Department of Transportation, Oregon Department of Transportation, South Carolina Department of Transportation, Tennessee Department of Transportation, State of Vermont Agency of Transportation, Washington State Department of Transportation, State of New Hampshire Department of Transportation, Ohio Department of Transportation, Texas Department of Transportation, Virginia Transportation Research Council, E-Tech Testing Services Inc. of Rocklin, California, FTI/ANAMET of Hayward, California, Caltrans' Structural Materials Lab, Caltrans' Division of Research and Innovation, Caltrans' Materials Engineering and Testing Services, Caltrans' Division of Structures, Caltrans' Office of Roadway Maintenance, Caltrans' Office of Traffic Safety, Caltrans' Legal Division.

Also, special thanks to David Whitesel and Richard Peter for reviewing this document.

TABLE OF CONTENTS

TECHNICAL REPORT STANDARD TITLE PAGE i
DISCLAIMER ii
ENGLISH TO METRIC SYSTEM (SI) OF MEASUREMENT iii
ACKNOWLEDGEMENTS iv
LIST OF FIGURES viii
LIST OF TABLES x
1. INTRODUCTION 1
1.1. Problem 1
1.2. Objective 1
1.3. Background 2
1.4. Literature Search 3
1.5. Scope 4
2. PROJECT HISTORY 5
2.1. Summary of Concepts 9
2.1.1. Concept A 9
2.1.2. Concept B 10
2.1.3. Concept C 10
2.1.4. Concept D 11
2.1.5. Concept E 11
2.1.6. Concept F 12
2.1.7. Concept G 13
2.1.8. Concept H 14
2.1.9. Concept I 14
2.1.10. Concept J 15
2.1.11. Concept K 15
2.1.12. Concept L 15
2.1.13. Concept M 17
2.1.14. Concept N 17
3. CONCLUSION 18
4. CURRENT PROPRIETARY END TREATMENTS 19
4.1. End Terminals 19
4.1.1. X-Tension™ Guardrail End Terminal 19
4.1.2. QuadTrend® 350 System 20
4.1.3. Flared Energy Absorbing Terminal (FLEAT™) 21
4.1.4. Sequential Kinking Terminal (SKT™) 21
4.1.5. ET-2000™ and ET-Plus™ 22
4.1.6. Slotted Rail Terminal (SRT-350™) 22
4.2. Crash Cushions 23
4.2.1. REACT 350® System 23
4.2.2. Compressor™ Attenuator 24
4.2.3. QuadGuard® LMC System 25
4.2.4. QuadGuard® Elite System 25
4.2.5. Hybrid Energy Absorbing Reusable Terminal (HEART™) System 26
4.2.6. Smart Cushion Innovations (SCI™) Crash Attenuator 27

4.2.7. Universal TAU-II® Crash Cushion Family 27
4.2.8. QuadGuard® Crash Cushion Family 28
4.2.9. The Quest® System 29
4.2.10. Trinity Attenuating Crash Cushion (TRACC™) Family 29
4.2.11. Crash Cushion Attenuating Terminal (CAT™) 30
4.2.12. Brakemaster® 350 System 31
5. REFERENCES 32
6. APPENDICES 33
6.1. Material Test Summaries 34
6.1.1. Test # ET- 601, Phase I Dynamic Testing (originally ET-101) 34
6.1.1.1. Purpose 34
6.1.1.2. Test Article 34
6.1.1.3. Test Vehicle 34
6.1.1.4. Data Acquisition 35
6.1.1.5. Impact and Exit 35
6.1.1.6. Results 35
6.1.2. Test # ET- 602, Phase I Dynamic Testing 38
6.1.2.1. Purpose 38
6.1.2.2. Test Article 38
6.1.2.3. Test Vehicle 38
6.1.2.4. Data Acquisition 39
6.1.2.5. Impact and Exit 39
6.1.2.6. Results 39
6.1.2.7. Recommendations 40
6.1.3. Test # ET- 603, Phase I Dynamic Testing 43
6.1.3.1. Purpose 43
6.1.3.2. Test Article 43
6.1.3.3. Test Vehicle 43
6.1.3.4. Data Acquisition 44
6.1.3.5. Impact and Exit 44
6.1.3.6. Results 44
6.1.3.7. Recommendations 45
6.1.4. Quasi-Static Load Tests of Polyethylene Pipe 48
6.1.4.1. Purpose 48
6.1.4.2. Test Articles 48
6.1.4.3. Load Tests 48
6.1.4.4. Test Results 49
6.1.4.5. Recommendations 49
6.1.5. Foam Module Tests Summary 52
6.1.5.1. Purpose 52
6.1.5.2. Test Specimens 52
6.1.5.3. Test Setup 52
6.1.5.4. Test Results 52
6.1.5.4.1. Test QS 203 52
6.1.5.4.2. Test QS 204 53
6.1.5.4.3. Test QS 205 53

6.1.5.4.4. Test QS 206 53
6.1.5.4.5. Test QS 207 54
6.1.5.4.6. Test QS 208 54
6.1.5.4.7. Test QS 209 54
6.1.5.5. Conclusions and Recommendations 54
6.1.5.6. Data Sheets and Force Versus Deformation Graphs 57
6.1.6. Dynamic Test Summary 65
6.1.6.1. Test Series # 247 65
6.1.6.2. Purpose 65
6.1.6.3. Test Specimens 65
6.1.6.4. Test Apparatus 65
6.1.6.5. Data Acquisition 66
6.1.6.6. Test Results 66
6.1.6.6.1. Test CCM3-1 66
6.1.6.6.2. Test CCM3-2 67
6.1.6.6.3. Test CCM3-3 67
6.1.6.6.4. Test CCM4-1 68
6.1.6.6.5. Test CCM4-2 68
6.1.6.6.6. Test CCM4-3 68
6.1.6.7. Test Comparisons 70
6.1.6.8. Conclusions and Recommendations 70

LIST OF FIGURES

Figure 1-1 Breakaway Cable Terminal (BCT) 1
Figure 1-2 Modified Eccentric Loader Terminal (MELT) 1
Figure 1-3 Low Maintenance Attenuator System (LMA™) 3
Figure 2-1 Type 60 Concrete Median Barrier 8
Figure 2-2 Initial Design for Concept A 9
Figure 2-3 Final Design for Concept A 10
Figure 2-4 Design Concept D 11
Figure 2-5 Design Concept E 12
Figure 2-6 Design Concept E: Pipe and Panels Detail 12
Figure 2-7 Design Concept F 13
Figure 2-8 Design Concept G 13
Figure 2-9 Design Concept G: End Detail 14
Figure 2-10 Initial Design Concept H 14
Figure 2-11 Design Concept I 15
Figure 2-12 Isometric View of Design Concept L 16
Figure 2-13 Design Concept L Detail 16
Figure 2-14 Preliminary Impact Sequence of Design Concept M 17
Figure 2-15 Design Concept N 17
Figure 4-1 X-Tension™ Guardrail End Terminal 20
Figure 4-2 QuadTrend® 350 System 20
Figure 4-3 Flared Energy Absorbing Terminal (FLEAT™) 21
Figure 4-4 Sequential Kinking Terminal (SKT™) 22
Figure 4-5 ET-2000™/ET-Plus™ 22
Figure 4-6 Six Post Slotted Rail Terminal (SKT-350™) 23
Figure 4-7 Eight Post Slotted Rail Terminal (SKT-350™) 23
Figure 4-8 REACT 350® System 24
Figure 4-9 Compressor™ Attenuator 24
Figure 4-10 QuadGuard® LMC System 25
Figure 4-11 QuadGuard® Elite System 26
Figure 4-12 Hybrid Energy Absorbing Reusable Terminal (HEART™) System 26
Figure 4-13 Smart Cushion Innovations (SCI™) Crash Attenuator 27
Figure 4-14 Different Configurations of the Universal TAU-II® System 28
Figure 4-15 QuadGuard® System 28
Figure 4-16 Wide QuadGuard® System 29
Figure 4-17 Quest® System 29
Figure 4-18 Trinity Attenuating Crash Cushion (TRACC™) 30
Figure 4-19 Crash Cushion Attenuating Terminal (CAT™) 30
Figure 4-20 Brakemaster® 350 System 31
Figure 6-1 ET-601 Film Analysis Data Sheet 36
Figure 6-2 ET-601 Film Analysis Graphs 37
Figure 6-3 ET-602 Film Analysis Data Sheet 41
Figure 6-4 ET-602 Film Analysis Graphs 42
Figure 6-5 ET-603 Film Analysis Data Sheet 46
Figure 6-6 ET-603 Film Analysis Graphs 47
Figure 6-7 Sample and Tester 49

Figure 6-8 Sample at Near Flat State 49
Figure 6-9 Test Setup 55
Figure 6-10 Fully Compressed Module, About 10” Deep 56
Figure 6-11 Test Sample 10 Minutes After Unloading 30” Dimension Now Almost 29” 56
Figure 6-12 Test No. QS-203 Data Sheet and Graphs 57
Figure 6-13 Test No. QS-204 Data Sheet and Graphs 58
Figure 6-14 Test No. QS-205 Data Sheet and Graphs 59
Figure 6-15 Test No. QS-206 Data Sheet and Graphs 60
Figure 6-16 Test No. QS-207 Data Sheet and Graphs 61
Figure 6-17 Test No. QS-208 Data Sheet and Graphs 62
Figure 6-18 Test No. QS-209 Data Sheet and Graphs 63
Figure 6-19 Tests QS-203 -209 Summary Graph 64
Figure 6-20 Test Set-Up, With Swing Mass at Nadir of Trajectory 66
Figure 6-21 Typical Overhead Shot of Swing Mass Impact 67
Figure 6-22 Pendulum Tests Comparison 68
Figure 6-23 Dynamic/Quasi-Static Impact Tests Comparison 69
Figure 6-24 Dynamic/Quasi-Static Impact Tests Comparison 69

LIST OF TABLES

Table 6-1 Loading Tests Data Summary for Tests QS102 - QS109..... 50
Table 6-2 Loading Tests Data Summary for Tests QS110 – QS115..... 51

1. INTRODUCTION

This report will explain the history of the *Development of a New Guardrail End Treatment* project, what was accomplished, where problems were encountered, and why the project was ultimately terminated. This report will also provide a summary of proprietary products that are currently available on the market that meet most of the initial or final design criteria.

1.1. PROBLEM

Initially, the objective of this research project was to develop a non-proprietary guardrail end treatment that provided a high level of safety performance at a reasonable life-cycle cost. As time progressed, the project evolved into developing a non-proprietary self-restoring impact attenuator that would provide a high level of safety performance, would be low maintenance, and have a low installation cost.

Figure 1-1 Breakaway Cable Terminal (BCT)

Figure 1-2 Modified Eccentric Loader Terminal (MELT)

This project was initiated in response to the 1994 Federal Highway Administration (FHWA) restriction on the use of the Breakaway Cable Terminal (BCT), due to unacceptable crash performance. The BCT, shown in Figure 1-1, was the principal guardrail end treatment adopted by many states. At the time, the only available non-proprietary alternative design was the Modified Eccentric Loader Terminal (MELT), Figure 1-2. However, even the acceptability of the MELT was uncertain because it couldn't meet the newly-developed crash testing criteria specified in National Cooperative Research Program (NCHRP) Report 350 for high-speed applications (Test Level 3).[a] Proprietary products were available, but they were expensive and/or did not provide the desired safety performance and low-maintenance qualities.

1.2. OBJECTIVE

The original project objective was to develop a non-proprietary guardrail end terminal for use on highways with traffic speeds of 80km/h (50mph) or higher that met the crash testing requirements specified in NCHRP Report 350[1]. An ancillary goal was to incorporate recycled plastics into its construction. The terminal had to meet the following design criteria:

[a] In December of 2003 the MELT was accepted by the FHWA as being crash worthy at NCHRP Report 350 Test Level 2 (TL-2)[2]. TL-2 crash testing is conducted at impact speeds of 70 km/h.

1) **Compliance with NCHRP Report 350 crash testing criteria.** FHWA policy specified that all guardrail terminals installed on the National Highway System after October 1, 1998 had to comply with the crash testing criteria specified in NCHRP Report 350.
2) **Will not allow gating[b] of the vehicle.** Gating terminals are required to have a large runout area behind the device and many roadside locations do not have the required run out area available.
3) **Does not cost more than $2,000 for one installation.** This amount is higher than the MELT, but less than proprietary products of the mid 1990's.
4) **Is installed parallel to the shoulder and is no wider than 0.6 m (2.0 ft).** Many guardrail locations do not have the space to flare a device away from the shoulder.
5) **Can be quickly repaired.** Having an end terminal that can be quickly repaired will reduce maintenance crew exposure to errant vehicles and decrease cost.
6) **Safely attenuates side-skidding vehicles impacting the nose.** Currently, there are no standard side impact testing procedures or criteria. Criterion #6 would not be considered in this project but a subsequent project would have been recommended to accomplish this.

As the project progressed the effort to use recycled plastics was abandoned and the design criteria evolved into the following:

1) **Complies with NCHRP Report 350 Test Level 3 (TL-3) criteria for non-gating terminals.** Test Level 3 crash testing involves impact speeds of 100 km/h (62 mi/h). Test vehicles include subcompact sedans and ¾-ton pickup trucks. A series of at least eight compliance crash tests will be conducted.
2) **Is non-gating.**
3) **Can be installed parallel to or flared from the roadway.** In addition to parallel installation, the upstream end of the device may be flared 1.2 m (4 ft) away from the roadway.
4) **Restores itself after an impact.** After a design collision the terminal will self-restore and require little or no repair.
5) **Will cost less than $20,000 for a single installation.** This increase in cost is due to the material used in a self-restoring device.

1.3. BACKGROUND

On September 29, 1994 the FHWA issued a memorandum entitled *Traffic Barrier Safety Policy and Guidance* that stated the following:

> A year from the date of this memorandum, the BCT will no longer be acceptable for installation on the approach end of barriers on high-speed, high-volume roads on the National Highway System (NHS). Where site conditions permit or are modified to permit, an eccentric loader terminal, a MELT or any other approved terminal may be used in lieu of the BCT. Where the necessary flare cannot be accommodated, a crashworthy terminal that can be installed without a flare would be the appropriate choice.[3]

[b] A gating terminal is designed to allow controlled penetration along a portion of its length. A non-gating terminal is designed to have full redirection capabilities along its entire length.

The MELT was not able to meet NCHRP Report 350 Test Level 3 criteria and was a gating device that was not designed to attenuate an end-on impact. With the loss of the BCT and the inability of the MELT to meet TL-3 crash testing criteria, there was a need for a better-performing, non-proprietary end treatment.

1.4. LITERATURE SEARCH

A variety of end treatments were studied in the early stages of this project. Researchers found that the MELT had a maximum installation cost of $1,800, while the cost of proprietary end terminals in the mid 1990's ranged from a minimum of $1,800 to as high as $7,000 per installation. In that time period there were only two proprietary, self-restoring, low-maintenance crash cushions available. They were the Reusable Energy Absorbing Crash Terminal (REACT 350®) (see Section 4.2.1), which had a cost of around $20,000 per installation and the QuadGuard Low Maintenance Attenuator System (LMA™) (Figure 1-3), which cost over $30,000 per installation. Both of these crash cushions were sold by Energy Absorption Systems, Inc. and featured High Density Polyethylene (HDPE) cylinders to absorb impact energy.

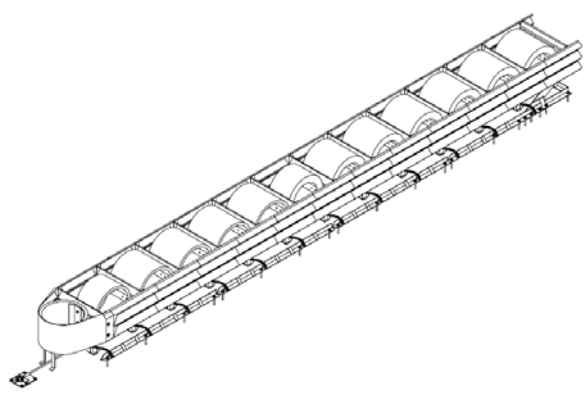

Figure 1-3 Low Maintenance Attenuator System (LMA™)

Feasibility studies were conducted to explore various materials and concepts at the beginning of the project. Plastics, elastomeric polymers, composites and concretes in different shapes and configurations where examined as potential energy-absorbing elements. The final decision to use HDPE pipe sections as the primary energy-absorbing elements was heavily influenced by the extensive research conducted at Vanderbilt University by Professor John F. Carney III and his report *Development of Maintenance-Free Highway Safety Appurtenance*. Carney's report concludes that:

> The feasibility of employing high molecular weight/high-density polyethylene (HMW/HDPE) as a reusable energy dissipation medium in highway safety appurtenances has been demonstrated. This polymer in tubular form can dissipate large amounts of kinetic energy, undergo large deformations and strains without fracturing, and essentially restore itself to its original size, shape, and energy dissipation potential when the forcing function is removed. It is recommended that potentially maintenance-free HMW/HDPE impact attenuation devices be designed and crash tested.[4]

1.5. SCOPE

The development of the end treatment was planned to have five phases. In Phase I, an instrumented crash test bogie would impact various-sized sections of HDPE pipe against an instrumented reaction wall at ambient temperatures. The results of these tests would indicate which pipe sizes would be most suitable for use in the end treatment.

In Phase II, the most suitable pipe sizes identified in Phase I would be tested in the same manner as the Phase I tests but over a wide range of temperatures. The purpose of these tests would be to collect data to be used in a finite element computer simulation. These simulations would help with the development of the final design concept.

In Phase III bogie crash tests of the final concept design configuration would be conducted. The tests would involve end-on impacts at speeds up to 110 km/h (68 mph) with bogies having masses of 820 kg (1,808 lbs) and 2000 kg (4,409 lbs).[c] These tests would determine whether the design configuration could safely attenuate an end-on impact. The data from these tests would have been used to validate a finite element computer model and enable a preliminary working prototype to be developed.

In Phase IV, a full-scale prototype would be designed and fabricated. It would feature a foundation and back-up structure along with all other details found in such an end terminal used on the highway. Final adjustments would be made to the prototype through crash testing with towed "junk"[d] vehicles using the parameters and conditions specified in NCHRP Report 350 TL-3 criteria for non-gating terminals. To provide for multiple tests at a reduced cost, the "junk" vehicles and data acquisition would not have needed to meet all the Report 350 guidelines. The result of these tests and computer simulations should have provided enough data and information to develop a final working design.

Phase V would have included the fabrication of the final device and completion of the eight compliance tests required by Report 350. Once the final design was in compliance, the processes for final approval and implementation would have begun.

[c] These bogie masses were the same as the masses of the standard test vehicles used in Report 350 crash testing.
[d] "Junk" indicates that the vehicle may not run or has damage that would prevent its use in a typical Report 350 test.

2. PROJECT HISTORY

Preliminary investigation and feasibility studies for this research project were conducted in early 1996. Research staff decided that research would be conducted on design Concept A (see Section 2.1.1), which used HDPE pipes to absorb impact energy. The project officially began in mid-1997 as an FHWA regional pooled fund study. Materials and equipment were purchased and Phase I began with the scheduling of three dynamic trial tests.

These tests where designated ET601, ET602, and ET603 and their purpose was to determine the "Force versus Deflection" curve of three SDR (Standard Dimension Ratio) 21 series HDPE pipes with a 20-in (580mm) outside diameter. To find the curve, a 986 kg (2174 lbs) test bogie was towed into the three pipe cylinders. The impact was recorded by four 200-kip (890-kN) compression load cells and by four high-speed cameras. Test ET601 was run with the knowledge that there was too much noise in the data acquisition equipment to properly acquire data and only three of the four cameras recorded the impact. Further tests were postponed until December 1997.

Test ET602 and ET603 were mostly successful; all four cameras recorded the impact as well as the four load cells. However, there was some question as to whether the load cells were seated properly, which would affect the accuracy of the load cell data. These tests also revealed that the testing apparatus needed improvement before any further Phase I testing. Film from all three tests was analyzed and a summary was written for each. These are shown in Sections 6.1.1 through 6.1.3.

In the first quarter of 1998 work began on improving the testing apparatus so that Phase I could continue. Work also began on a thermal control chamber for Phase II. However, an FHWA pooled fund study advisor ordered a legal review of design Concept A after receiving a complaint from the inventor of the REACT 350®. The complaint stated that the current concept infringed on their patent. Attorneys from both sides disagreed and this controversy delayed the project for several months. Rather than fight a patent infringement law suit, researchers decided to investigate alternative designs.

Two alternatives were developed. The first, Concept B, would substitute Medium Density Polyethylene (MDPE) pipes for the HDPE pipes in Concept A as a way to bypass the REACT® patent. See Section 2.1.2 for a summary of Concept B. The second alternative, later called Concept E, would use HDPE pipe sections oriented on the horizontal axis instead of the vertical axis found in Concept A. Concept B was the first to be investigated.

While work continued on the thermal control chamber, quasi-static tests were conducted on the MDPE to compare its energy absorption capacity to that of HDPE. The results of the test showed that MDPE absorbed less energy than HDPE but could still be used successfully as a crash cushion element. See Section 6.1.4 for a description of this testing. Finite element computer simulations were run to determine the pipe diameter sizes to be used in future dynamic testing.

In the third quarter of 1998, these computer simulations identified an optimal MDPE pipe diameter, but pipes in that size were not currently produced by the MDPE pipe manufacturers.

One manufacturer was found that would be willing to fabricate the pipe diameter needed but it would be so expensive as to make the concept cost prohibitive. This concept was abandoned and the second alternative was investigated.

The second alternative was quickly shelved for the development of a new concept for the following reasons: First, having the HDPE in an orientation different from the REACT 350® would require dynamic testing with a thermal control chamber[e]. This would prolong a project that was already behind schedule and results may have indicated that the system would not perform properly in all ranges of weather. Secondly, from studying the results of impacts on the REACT 350® researchers found that the HDPE cylinders do not restore completely to their original state and require maintenance to stretch them back after an impact. Third, study of the impact performance of the REACT 350® indicated that HDPE has significant rebound characteristics that would be difficult to mitigate and would increase the cost and complexity of the device.

A new design concept, Concept C (Section 2.1.3), was developed that would be completely self-restoring without maintenance intervention, be largely immune to temperature changes, and have less rebound than the REACT. The design used nested HDPE pipes that would telescope backward in an impact. Preliminary computer simulations showed that this system might perform as intended. Before the project could progress any further a patent review was conducted. Unfortunately, this review indicated that a patent existed for a similar technology. This design was consequently abandoned to prevent any infringement issues.

Most of the work done in the fourth quarter of 1998 and the first quarter of 1999 was to develop Concept E (Section 2.1.5), since it was apparently the only viable option left at that time. In preparation for the Technical Advisory Committee (TAC) meeting that was held in April 1999, three additional concepts were developed. Design Concept D had steel reinforced concrete diaphragms that were connected by HDPE pipe quarter sections that would collapse during an impact (Section 2.1.4). Concept F would use marine foam modules as the primary energy absorber (Section 2.1.6). Concept G was similar to concept A except the cable that holds the pipe sections in place would be anchored to the last pipe that was thicker than the other sections (Section 2.1.7).

At the meeting, TAC members discussed Concepts E, D, F, and G along with the cost of restorable designs. Concept D was not advised due to legal issues but E, F, and G were accepted. Due to low member attendance at the meeting, a mail-in ballot was sent to all of the members. The ballot asked if the project should pursue a sacrificial design, pursue a self-restoring design, or be abandoned entirely. Fifteen of the sixteen ballots were returned with five votes for a sacrificial design, six votes for a self-restoring design, three votes to abandon the project, and one abstained. The ballot also asked for the members to rank the four concepts. Using a point system to rank the concepts from highest to lowest resulted in the following ranked order: E, F, G, and D.

[e] At some point around this time work on the thermal control chamber was stopped but no record of when this happened is available.

Over the next three quarters, work on the project temporarily stopped. The project manager left and a new part-time project manager took over. The project continued to head in the direction of developing a self-restoring impact attenuator based on the TAC ballot results. Concepts D and E were abandoned due to potential patent infringement issues and concept G was shelved because it was more complex and therefore more expensive then Concept F. Custom fabricated foam modules were ordered so that tests could be run. The modules were received but no tests were conducted because there was no full-time project manager. The then-current part-time project manager transferred to a different position sometime in the fourth quarter of 1999 leaving the project without a manager.

For the next year, candidates were interviewed for the position but none accepted. In the first quarter of 2001, the original project manager was rehired for a different position but was assigned this project. Work on the project started again and Concept F was pursued.

Basic material testing was started on the foam modules with some difficulties. Quasi-static testing was done at the only test facility in the Sacramento area. During the testing the compression machine broke down and was subsequently unavailable. Testing continued at the next closest facility which was in the San Francisco Bay area. The purpose of these tests was to determine the energy absorption capacity of the marine foam modules under quasi-static loading when compressed to 33% of its original depth. The results of the tests showed that the modules exhibited significant energy absorption capacity and should be studied further with dynamic loading. See Section 6.1.5 for more details on the testing.

Dynamic testing of the foam modules was conducted using a pendulum impact device. The purpose of the tests was to determine the "Force versus Deformation" and "Energy versus Deformation" relationships under impact for two of the foam modules and to study the reaction of the modules under impact. The test results showed that the modules were capable of significant energy absorption even after multiple impacts. Additionally, the modules have a full and immediate restoration of the impacted depth after an impact which would present a problem of vehicle rebound. A system would need to be developed to slow the rebound of the modules. Also, one of the modules ruptured during a light impact from the pendulum in the lateral direction. Therefore, the modules would need to be protected in the lateral direction with fenders. See Section 6.1.6 for a summary of the dynamic testing.

In the last quarter of 2001, the "Force versus Deformation" and "Energy versus Deformation" curves developed from the data gathered from the pendulum tests were used to develop and validate a finite element model of the foam module's material. A preliminary investigation was conducted using simulations of the modules in a full-length crash cushion being impacted under the test conditions of NCHRP Report 350 tests 3-30 and 3-31. In test 3-30, an 820-kg small car approaches the crash cushion parallel to the roadway, with impact to the left or right of the vehicle centerline. This test primarily evaluates occupant risk and vehicle trajectory. In test 3-31, a 2000-kg pickup truck approaches the crash cushion parallel to the roadway with impact at the vehicle's centerline. This evaluates the capacity of the device to absorb the kinetic energy in a safe manner. The results of the simulations indicated that the foam material would be feasible to use in a self-restoring end treatment.

Very little was accomplished in 2002. In an effort to reduce the cost of the foam material, an alternative concept, Concept H, was developed. This concept was similar to Concept F, but instead of using custom-fabricated modules, "off the shelf," cylinder-shaped marine fenders would be used to reduce costs (see Section 2.1.8). Additional simulations were run that showed the marine foam material in the cylindrical shape could be used in a full-length crash cushion. However, even with the lower cost of "off the shelf" fenders, Concept H was abandoned because the protective side fenders increased the cost of the system to the point that it became prohibitive. At the end of the year a new concept was in development.

Concept I used nested shells in the shape of a single slope median barrier like the Type 60, Figure 2-1. Impact energy would be absorbed by a compression spring or small rubber blocks (see Section 2.1.9). Concept I was quickly abandoned. Computer simulations showed that it should be able to handle a head-on impact but the results also showed that the thickness required for the shells to be stiff enough to redirect a vehicle might lead to the system being too heavy and provide too much inertial resistance during a head-on impact.

Figure 2-1 Type 60 Concrete Median Barrier

The next two concepts, Concepts J and K, were evaluated for the first half of 2003. Very little information is available on these concepts as they were both quickly abandoned. Concept J used nested steel channels that had rollers that would squeeze rubber fenders and absorb kinetic energy (see Section 2.1.10). No information is available on Concept K.

Work for the last half of 2003 was performed on Concept L and on a preliminary evaluation of a testing device that was later named the High Speed Dynamic Impactor (HSDI). Concept L involved using collapsible, accordion-like, steel beam element diaphragms with extension springs as the energy absorber, see Section 2.1.12. Computer simulations revealed that it required too much energy to collapse the diaphragms. Efforts were made to "soften" the system but, with no acceptable results, the concept was abandoned. The HSDI testing device would have used compressed air to propel a known mass into components and prototypes of the crash cushion. Initially the device was to be small, but would eventually evolve into a system capable of propelling an 820-kg (1808-lbs) car at 70-km/h (43.5-mph).

Two concepts, Concept M and N, were investigated in 2004. Concept M involved the use of buckling rubber fenders as the primary energy absorber. The concept was quickly abandoned because the fenders were not stiff enough to redirect a lateral impact (see Section 2.1.13). Concept N used a combination of foam modules and telescoping box beam elements. The foam modules would absorb the energy of a head-on impact while the box beam elements would redirect the vehicle in a lateral impact.

Throughout 2005 and 2006, work was started on the HSDI and feasibility studies of Concept N continued. The majority of the time was spent on the development of the HSDI. The HSDI would use a pneumatic piston cylinder device to propel a mass (e.g., a test vehicle) via a pulley and cable system into a test article. It was intended that the time spent developing this device would be regained by having a fast-acting propulsion system. Both Concept N and the HSDI were in the preliminary stages of development when the project manager left for the second time at the end of 2006. No further work was accomplished after the beginning of 2007.

2.1. SUMMARY OF CONCEPTS

2.1.1. Concept A

Initially, this concept was to use inexpensive, crushable modules that are easy to replace. Cables would tie the modules together and be anchored at both ends of the terminal (see Figure 2-2). The final design for this concept was to use two different sized HDPE pipe sections as the energy absorbing crushable modules. Each module would have an inner and outer HDPE pipe section oriented vertically. The terminal would have a concrete foundation and the entire system would be detached from the guardrail. During a designed head-on impact the modules would collapse, absorbing the kinetic energy of the vehicle and bring it to a stop. During a lateral impact the tension in the cables tying the modules together would redirect the impacting vehicle. Some module deformation will occur during this type of impact. See Figure 2-3.

This concept was abandoned due to potential patent infringement issues. During the course of this design there was concern about potential snagging between the end of the terminal and the beginning of the guardrail. To fix this problem there would have to be a transition between the terminal and the guardrail, but to do so would infringe on the REACT 350® Patent 5,403,112 owned by Energy Absorptions System, Inc. There was no other way to fix the potential snagging issue and the owners of the patent threatened legal action if this design progressed.

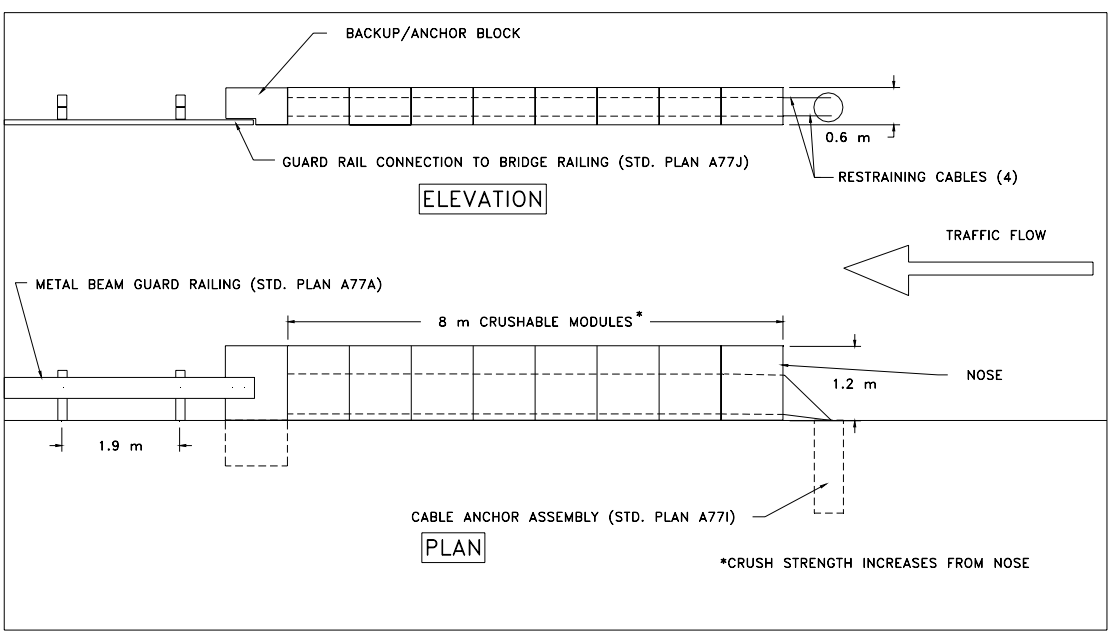

Figure 2-2 Initial Design for Concept A

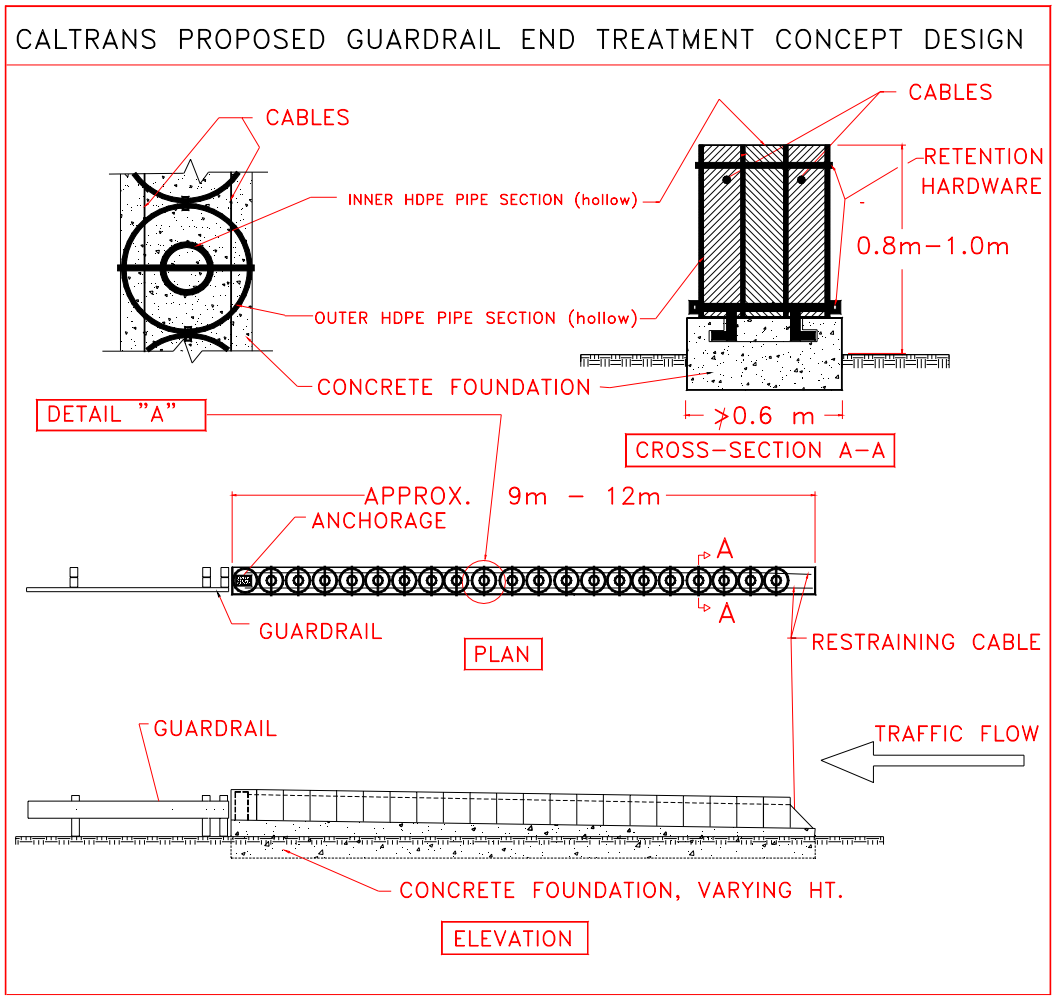

Figure 2-3 Final Design for Concept A

2.1.2. Concept B

This design is exactly the same as concept A but the HDPE pipe sections were to be replaced by Medium-Density Polyethylene (MDPE) pipe sections. Using MDPE pipe sections was a way to try to bypass the patent that stopped concept A. While researching the material it was found that MDPE pipe was not produced in the diameters needed for the design and that it would be extremely expensive to manufacture the needed sizes. This concept was abandoned because of this cost and there was no guarantee that using MDPE pipe sections would avoid the REACT 350® patent issue.

2.1.3. Concept C

This Design was to use nested HDPE pipes. The pipes were to be arranged horizontally one in the other in a telescoping fashion with the open ends facing traffic. During a head-on impact the pipes would be pushed into each other and the kinetic energy would be absorbed by the air inside the tubes being compressed. Holes in the pipe would allow air to escape so that there would be little to no rebound. After and impact, the pipes would be pulled back to their starting position

by an elastic cable routed around a pulley with one end tied to the impact head and the other end anchored to the ground. This concept was quickly abandoned after it was found that the idea had been patented by Texas A & M University (patent no. 5,391,016). Other than preliminary sketches, no drawings are available of this design concept.

2.1.4. Concept D

Concept D used steel-reinforced concrete diaphragms that were to be connected by HDPE pipe quarter sections. It was to have a concrete foundation with steel rails that the diaphragms slide on. During a head-on impact the kinetic energy would be absorbed by the HDPE pipe quarters as the diaphragms are pushed back and collapse. A concrete anchor block would provide a wall that the pipe quarters can push on. During a designed lateral impact the vehicle would be redirected by hitting on the pipe quarters. This concept was abandoned because it was deemed too expensive to build and because it would require an excessive amount of time to install. Also, the system could have had patent infringement issues since it was similar in design to the Hybrid Energy Absorbing Reusable Terminal (HEART™, Section 4.2.5), that was being developed by the Texas Transportation Institute at the time.

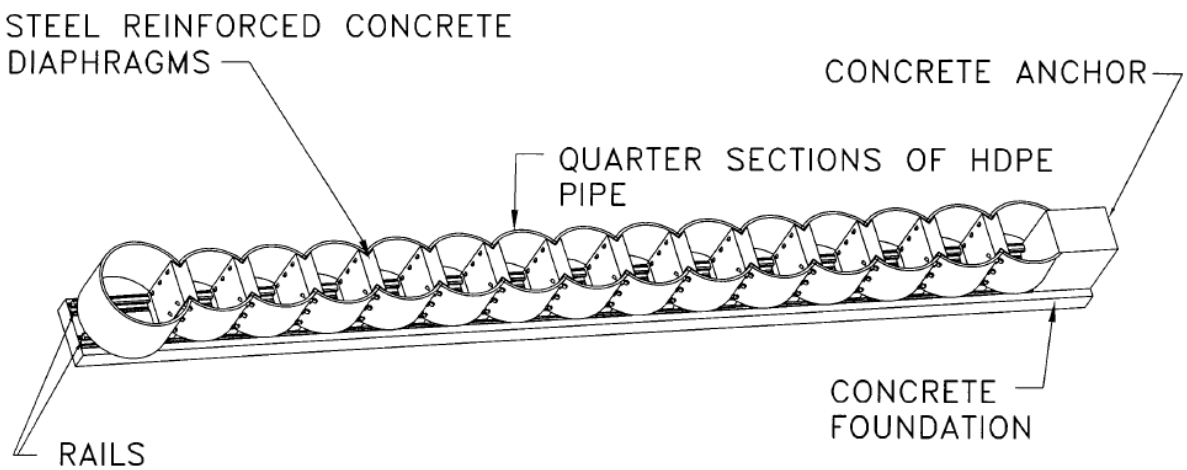

Figure 2-4 Design Concept D

2.1.5. Concept E

This concept is similar to concept A in that it uses HDPE pipe sections as the primary energy absorber but with the pipe oriented horizontally. To protect the open ends of the pipe and provide a way to reflect lateral impacts, overlapping fiberglass panels were added. The pipe sections and panels slide on a pair of steel rails that are fastened to a concrete foundation. In a design head-on impact, the pipe sections would be pushed back against each other, causing them to collapse. The overlapping panels would allow for the system to telescope and thereby absorb the kinetic energy.

This design was heavily pursued until the first project manager left. However, this concept was later dropped due to possible patent infringement issues since it resembles the QuadGuard® Elite (Section 4.2.4) and the QuadGuard® LMC (Low Maintenance Cushion, Section 4.2.3), both manufactured by Energy Absorption Systems, Inc.

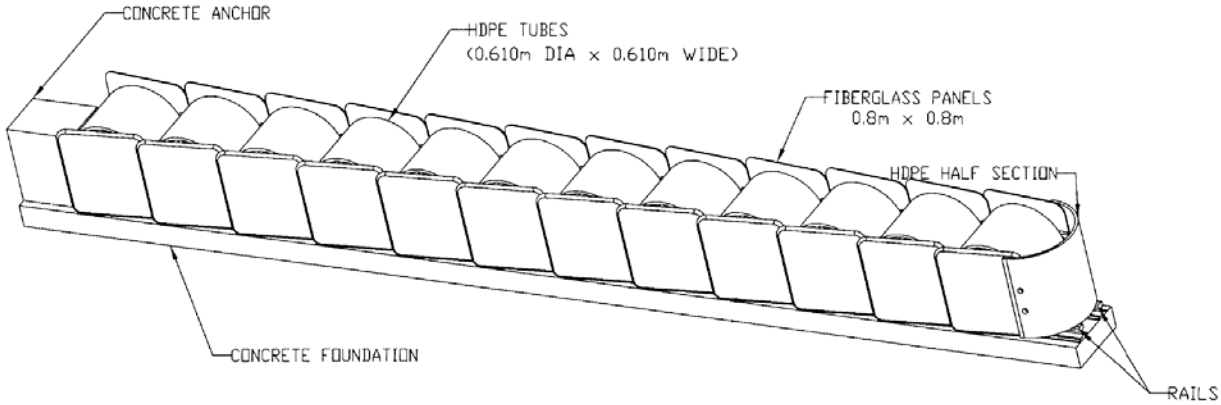

Figure 2-5 Design Concept E

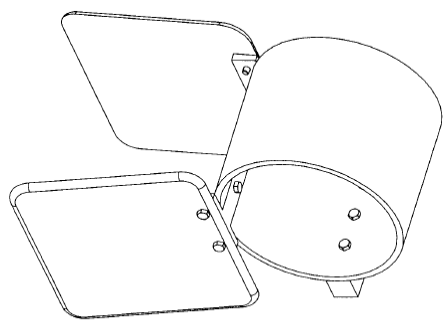

Figure 2-6 Design Concept E: Pipe and Panels Detail

2.1.6. Concept F

This design concept was to use marine foam rectangular modules as the primary energy absorber. Initially, the modules were to be used for both head-on and lateral impacts without protection. The modules were placed between steel plates and would ride on a pair of rails that were fastened to a concrete foundation. Steel cables would hold the modules in place and provide tension for redirecting a vehicle during a lateral impact. During material testing, the modules were able to withstand head-on impacts, but they would rip and tear in lateral impacts. This established the need for overlapping side panels to protect the modules

Before material testing, the estimated cost of an installation using marine foam modules was $16,000. This cost was acceptable because it was cheaper than the REACT 350 and the LMA. Also, it was assumed that these modules would have less rebound compared to the other two systems. Testing not only revealed the need for protective side paneling but also for a means for retarding the significant, post-impact rebound of the system. These two additions would increase the installation cost and make the system cost prohibitive. Therefore the concept was abandoned.

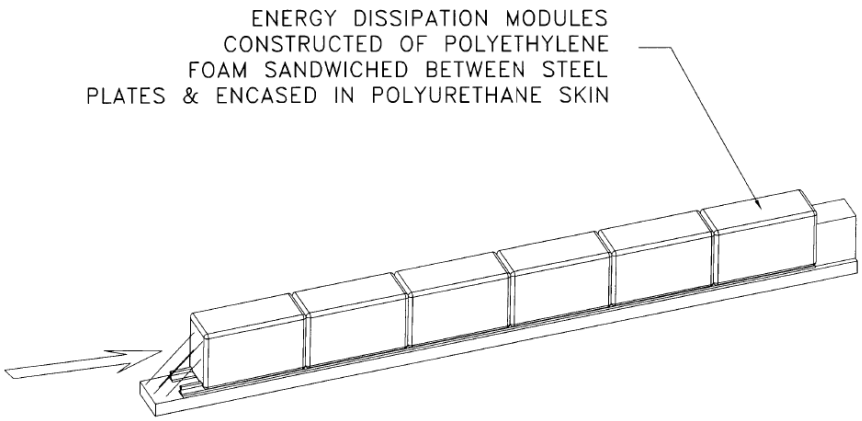

Figure 2-7 Design Concept F

2.1.7. Concept G

Concept G is similar to Concept A except that the cable that holds the pipe sections is anchored to the last pipe that is much thicker than the other sections and is restricted from traveling upstream. A fender panel is bolted to the last two pipes that overlaps the guardrail and is a form of transition. Even with these changes it was apparent that the system would still have issues with patent infringement and was consequently abandoned.

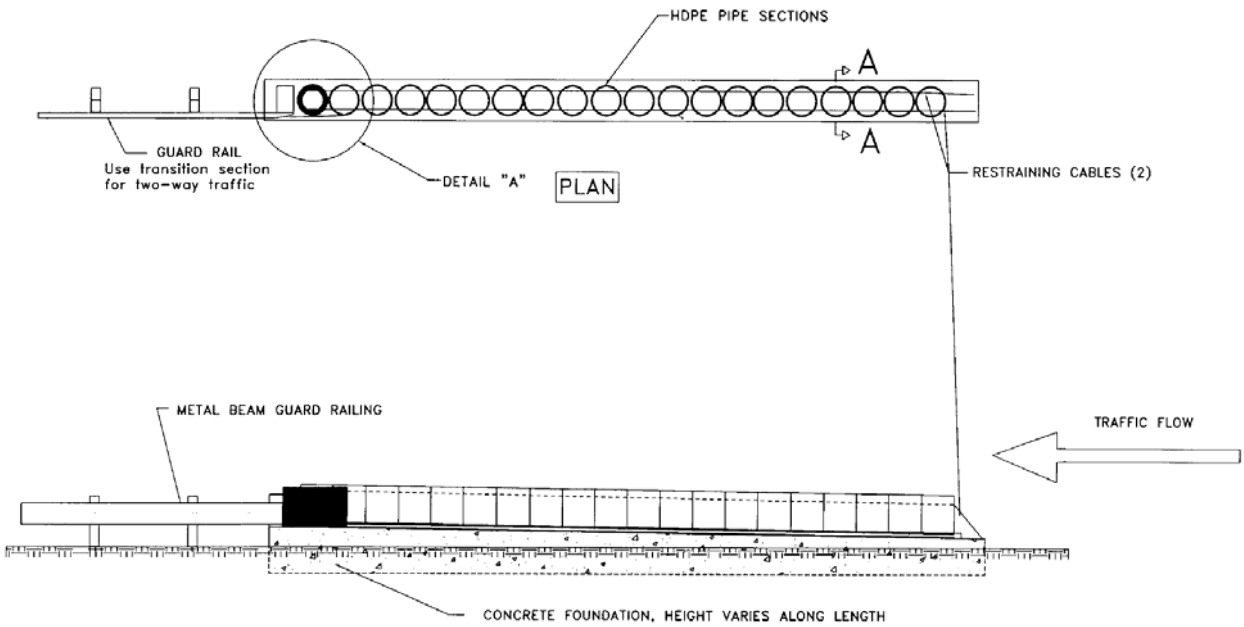

Figure 2-8 Design Concept G

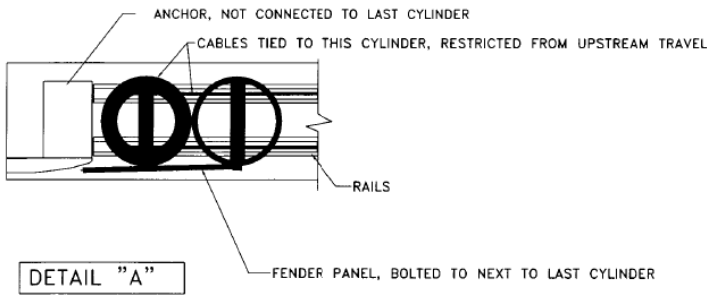

Figure 2-9 Design Concept G: End Detail

2.1.8. Concept H

This Concept used marine fenders as the primary energy absorber. The marine fenders have a cylindrical shape and would be oriented vertically. The fenders rip and tear in a lateral impact in the same way as the marine foam modules used in concept F. Therefore, there would have to be side panels to protect the fenders and redirect a vehicle during a lateral impact. This concept was abandoned for the same reasons that made concept F cost prohibitive.

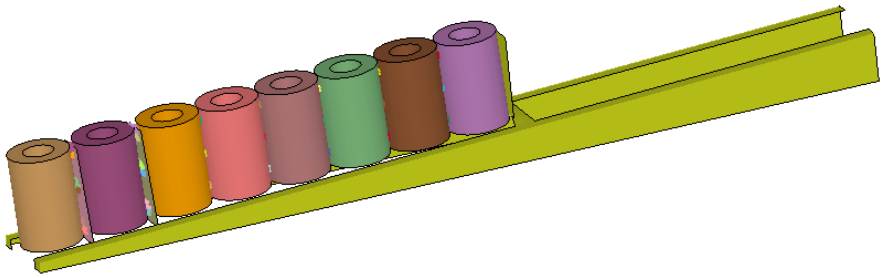

Figure 2-10 Initial Design Concept H

2.1.9. Concept I

This concept was to use concrete or steel shells in the shape of the Type 60 barrier with rubber blocks or a spring mechanism inside for energy absorption. Upon impact the shells would telescope backward and crush the energy-absorbing material inside, bringing the vehicle to a stop. Lateral impact would be redirected in the same way as a vehicle impacting a single slope concrete barrier like the Type 60. Computer simulations indicated that the thickness of the shells required to provide enough stiffness to redirect a vehicle during a lateral impact might lead to the system becoming too heavy. If the system were too heavy there may be too much inertial resistance to a head-on impact from a small vehicle. There was also the possibility of using stiffer, light-weight material, but its use would make the design cost prohibitive. These results led to the abandonment of this design concept.

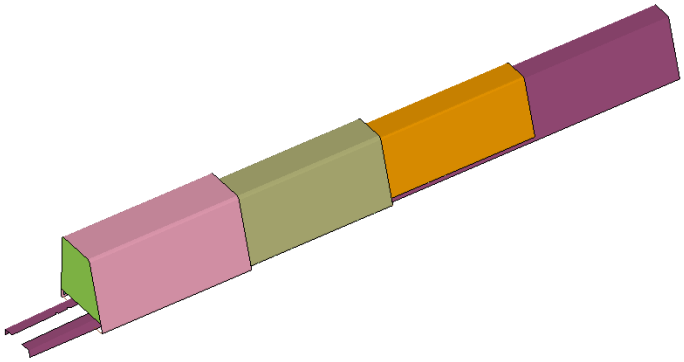

Figure 2-11 Design Concept I

2.1.10. Concept J

Information on this concept is limited and other than some preliminary sketches, no drawings are available. Concept J used nested steel channels with rubber fenders that were squeezed by rollers to absorb the kinetic energy during an impact. Computer simulations were run to test the feasibility of a combined frictional and elastic attenuation mechanism. Results showed that there were problems with the frictional mechanism and the concept was abandoned. (Information gathered from quarterly reports.)

2.1.11. Concept K

Information on this concept is very limited and, other than some preliminary sketches, no drawings are available. This concept was abandoned for unknown reasons.

2.1.12. Concept L

Concept L used steel frame diaphragms that would collapse in an accordion fashion with extension springs to absorb the impact energy. Since the primary material in this design was steel the cost of the system would be low. Computer simulations showed that the diaphragms were too stiff. Efforts were made to soften the system with little success. Researchers requested information from manufacturers on the cost and availability of the necessary springs, but no information was received. This concept was abandoned shortly thereafter.

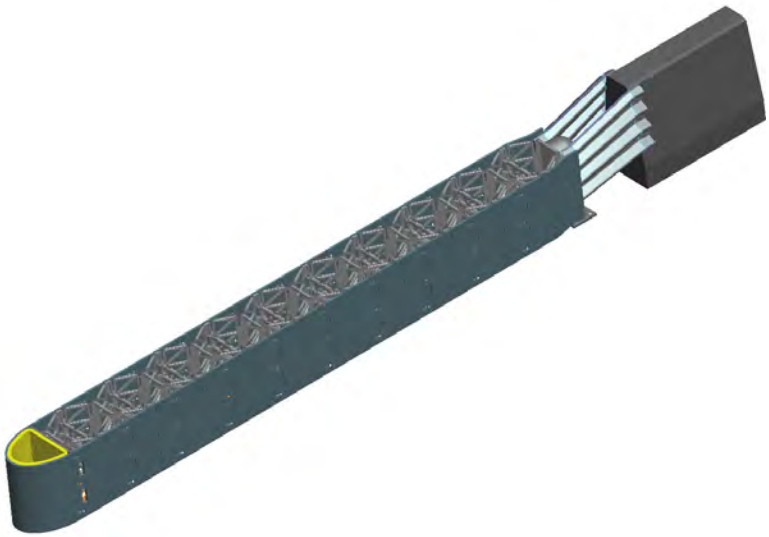

Figure 2-12 Isometric View of Design Concept L

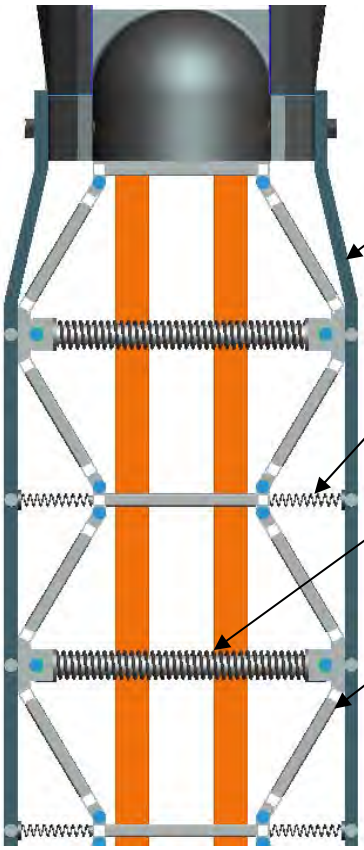

Figure 2-13 Design Concept L Detail

2.1.13. Concept M

This concept used a series of bays consisting of buckling rubber fenders. During a design head-on impact the bays would collapse and the kinetic energy would be absorbed by the buckling fenders. Preliminary computer simulations showed that the system could handle a head-on impact but that the system was not stiff enough to redirect a lateral impact. This concept was abandoned shortly thereafter.

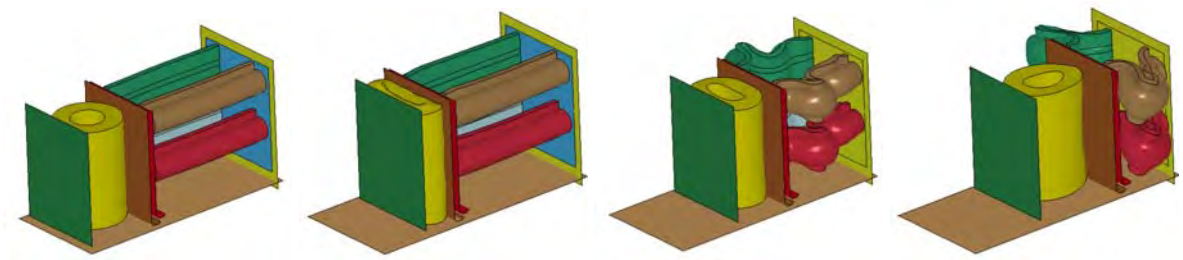

Figure 2-14 Preliminary Impact Sequence of Design Concept M

2.1.14. Concept N

Concept N used the foam modules that were in concept F with the addition of telescoping steel box beams. During a design head-on impact the beams would telescope back and the foam modules would collapse, absorbing the kinetic energy and bring the vehicle to a stop. During a lateral impact the box beams would redirect the vehicle. Computer simulations were run but the project manager left before they were evaluated. No further work was done on this concept.

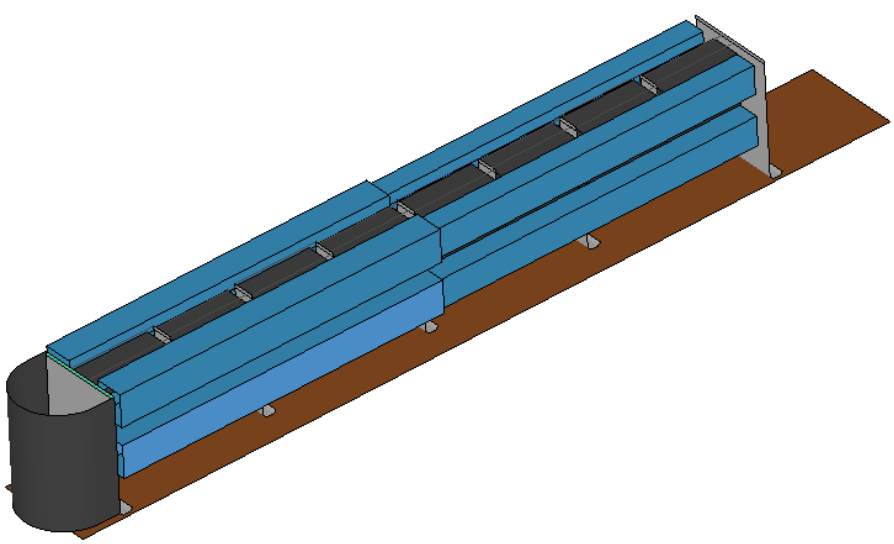

Figure 2-15 Design Concept N

3. CONCLUSION

Due to the current economic climate in California, a push was made to close out or terminate projects. This project was deemed unsuccessful and should be terminated because it had grown stagnant due to constant holdups and restarts. Also, because this project had been ongoing for almost 15 years, new products became available that meet both the initial and final design criteria. At the time this project was started there were only two self-restoring crash cushions on the market. Since they were owned by the same company there was no real competition and the systems were expensive. Now there are at least five systems available that are manufactured by three different companies. See Section 4 for a list of current end terminals and crash cushions.

This pooled fund study was unsuccessful for several reasons. One was that the study objective's rapid turn in a different direction at the very beginning. This project was started to replace the BCT and the MELT systems with an inexpensive, non-gating, and low-maintenance end terminal. The cost of the terminal was to be around $2,000 per installation. The project quickly changed into developing a non-gating, self-restoring crash cushion that was much more complex and would require much more expensive materials. The final estimated cost of each installation was to be around $20,000. Also, at the end of the project much time and effort went into the development of the High Speed Dynamic Impactor, which would have provided a means to dynamically test materials and prototype configurations. The project was already extremely behind schedule and this impact testing device really should have been a research project by itself.

Another reason why this project was unsuccessful was the amount of time involved. Patent infringement issues plagued this project from the beginning, each time bringing the project to a standstill and in most cases requiring the development of new concepts. The loss of the project manager at three different times also slowed the project. Each time a new manager took charge of the project, months were lost as he or she was brought up to date.

For this study to be successful it should have been divided into three projects. The first project would have been to find an inexpensive, non-gating terminal to replace the BCT and MELT systems that met the current roadside safety testing criteria. The designers should have had the option of a sacrificial terminal. The second project would have been to develop a low maintenance, non-gating, self-restoring crash cushion. Using what was learned in this study, before any concepts were developed, a patent study should have been conducted so that the researchers would have known what ideas were off the table. Doing this would have saved time and money, and prevented frustration. The third project would have been to develop the High Speed Dynamic Impactor.

Though this project has been terminated, this does not mean that there is not a need for a non-proprietary end terminal or self-restoring crash cushion. This project could be studied to identify potential stumbling blocks that can slow down or stop a project such as this one. It can also remind project managers that they need to stay focused on what the project is trying to accomplish. The next time there is research conducted in a related subject area lessons learned from this project could help make such research successful.

4. CURRENT PROPRIETARY END TREATMENTS

The following is a list of proprietary end treatments that are currently on the market and accepted by the FHWA for use on the National Highway System. The list only includes end treatments that are Report 350 TL-3 devices even though many systems have TL-2 versions. A description of each end treatment is provided as well as a summary of which of the project design criteria the system meets (for criteria, see Objective, Section 1.2). The end treatments are separated into two categories: end terminals and crash cushions. It should be noted that the description of the following products is presented for the purpose of concept comparison only and should not be used as design or construction details.

The end terminals listed meet most of the original design criteria, exclusive of criterion #6 pertaining to side impacts, which was more of a recommendation for a future project. Also, the criterion "can be quickly repaired" was changed to "requires little to no maintenance". The listed crash cushions meet the majority of the final design criteria.

Installation costs can vary and are affected by the location of the device, cost of labor, number of workers, lane closures, equipment cost, type of device foundation, and type of transition. Therefore, installation costs for both the end terminals and crash cushions are changed to unit cost. Unit cost is the cost of buying the base device from a distributor or manufacturer with no additional costs for installation or delivery. Unit costs can fluctuate due to the cost of materials but are constant enough for the purpose of this report.

4.1. END TERMINALS

4.1.1. X-Tension™ Guardrail End Terminal

Web Site: www.barriersystemsinc.com/#/x-tension

The X-Tension™ Guardrail End Terminal is manufactured by Barrier Systems, Inc. and was accepted for use on the National Highway System (NHS) by the FHWA in November 2007. The X-Tension™ system is designed for use with strong-post W-beam guardrail. The system consists of two cables that are anchored to the ground and are threaded though the impact head. The cables continue down the back of the W-beam in the "hollows" and are attached to a cable anchor bracket located at the downstream end of the system. A brake bar found in the impact head is used to lock the cables in place before they are tightened. For side impacts to the rail, tension is transferred via the cables to the ground anchor to provide containment and redirection. For head-on and angled impacts directly at the end, friction between the cables and a convolution in the impact head dissipate kinetic energy. A slider and slider bracket assembly allow the rails to telescope when impacted end on and still maintain full ribbon strength in the rail during a redirect impact.

The X-Tension™ meets NCHRP Report 350 TL-3 crash test criteria. It is a non-gating end terminal. It can be installed in parallel, flared, and median installations and the width of the impact head has a range of 0.56 m to 0.70 m (1.8 ft to 2.3 ft). The cost of a parallel or flared single unit is about $3,000. This is not a low maintenance system because after an impact most of the system will need to be replaced.

Figure 4-1 X-Tension™ Guardrail End Terminal

4.1.2. QuadTrend® 350 System

Web Site: www.energyabsorption.com/products/products_quadtrend350_end.asp

The QuadTrend® 350 system is manufactured by Energy Absorption Systems, Inc. and was accepted for use on the NHS by the FHWA on June 1998. The QuadTrend® consists of six interlocking, telescoping "Quad-beam" panels on the traffic side which are attached to six wide flange posts on slip base supports. It has a plastic nose and sand filled ballast boxes are mounted on posts 1, 3, and 4. A redirection cable is attached to post 1 routed along the back and away from the system and anchored to the ground. During a head-on impact the nose collapses and the sand ballast boxes help dissipate energy. The redirection cable on post 1 forces the vehicle away from the hazard. For lateral impacts the tension in the system will redirect the vehicle within the length of need[f] (LON).

The QuadTrend® 350 system meets the NCHRP Report 350 TL-3 crash testing criteria. It is a gating system and requires a clear area behind the device through which gated vehicles can pass. The cost of a single unit is about $4,500. The device is installed parallel to the shoulder and the impact head is 0.38 m (1.2 ft) wide. This is not a low maintenance system because after an impact the ballasts will have to be refilled and any damaged or destroyed parts must be replaced.

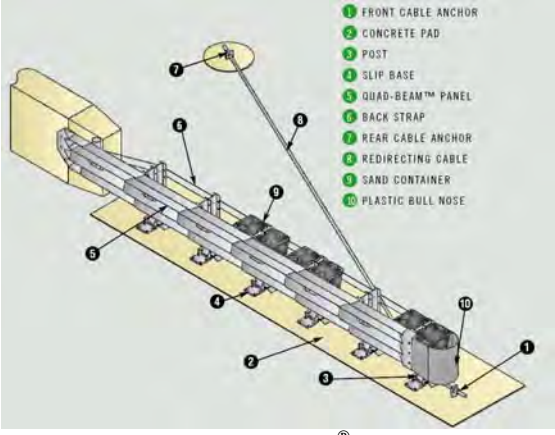

Figure 4-2 QuadTrend® 350 System

[f] The Length-of-Need is the part of an end terminal that is designed to contain and redirect an errant vehicle. The vehicle will gate through if the impact is upstream of the length of need.

4.1.3. Flared Energy Absorbing Terminal (FLEAT™)

Web Site: www.roadsystems.com/fleat.html

The FLEAT™ is manufactured by Road Systems, Inc. and was accepted for use on the NHS by the FHWA in April 1998. The main components of this system are an impact head and guide tube assembly, a modified W-beam section, a breakaway anchor assembly, and a series of seven weakened posts. When the system is hit head-on, energy is absorbed as the impact head and guide tube assembly are pushed down the W-beam section, flattening and kinking the rail in the process. For lateral impacts the breakaway assembly provides enough longitudinal tension to redirect the vehicle within the LON.

The FLEAT™ meets the requirement of NCHRP Report 350 TL-3 crash testing criteria. The FLEAT™ is a gating system and requires a clear area behind the device. The cost of a 3.8 m (12.5 ft) unit is about $850. The system is installed flared to the shoulder and the impact head has a width of 0.36 m (1.2 ft). The device is not a low maintenance system. After most design impacts the impact head can be reused, but the rest of the system will have to be repaired or replaced.

Figure 4-3 Flared Energy Absorbing Terminal (FLEAT™)

4.1.4. Sequential Kinking Terminal (SKT™)

Web Site: www.roadsystems.com/skt.html

The SKT™ is manufactured by Road Systems, Inc. and was accepted for use on the NHS by the FHWA in April 1997. The SKT™ works the same way as the FLEAT™ except that the impact head is different and there are eight weakened posts instead of seven.

The SKT™ meets the requirement of NCHRP Report 350 TL-3 crash testing criteria. The SKT™ is a gating system and will require a clear area behind the system. The cost of a 3.8 m (12.5 ft) unit is $1,000. The system can be installed parallel or flared to the shoulder and the width of the impact head is 0.51 m (1.7 ft). It is not a low maintenance system because after most impacts the impact head can be reused but the rest of the system will have to be repaired or replaced.

Figure 4-4 Sequential Kinking Terminal (SKT™)

4.1.5. ET-2000™ and ET-Plus™

Web Site: www.highwayguardrail.com/products/etplus.html

The ET-2000™ is manufactured by Trinity Highway Products and was accepted for use on the NHS by the FHWA in August 1995. The ET-Plus™ is the same system but with the impact head that weighs 40 kg (88 lbs) less than the ET-2000™ impact head. The systems consist of an impact head, eight breakaway posts, and W-beam rail. During a head-on impact the impact head is pushed down the W-beam rail, which the head extrudes as a flat ribbon. This process absorbs the impact energy and brings the vehicle to a stop. During a lateral impact the vehicle is redirected if the impact is within the LON.

ET-2000™ and the ET-Plus™ both meet the requirements of NCHRP Report 350 TL-3 crash testing criteria. Both systems are gating devices and will require a clear area behind the systems. The cost of a single unit is about $1500. They can be installed parallel or flared to the roadway and the impact head is 0.38 m (1.25 ft) wide. It is not a low maintenance system. After an impact the impact head can be reused sometimes but the rest of the system will have to be repaired or replaced.

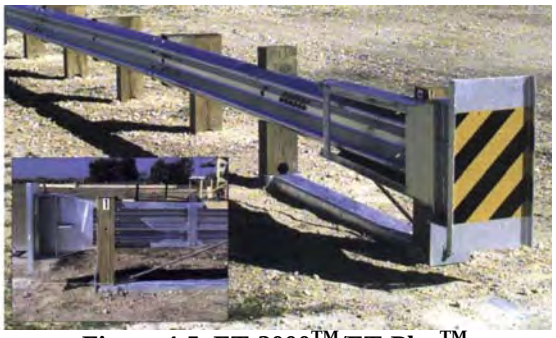

Figure 4-5 ET-2000™/ET-Plus™

4.1.6. Slotted Rail Terminal (SRT-350™)

Web Site: www.highwayguardrail.com/products/et-srt350.html

The SRT-350 is manufactured by Trinity Highway Products and was accepted for use on the NHS by the FHWA in December 1995. There are two versions of the SRT-350™; one that uses eight posts with the first two posts being breakaway wooden post and another which uses six posts with the first two posts being breakaway steel posts. Slots are cut into the first two W-beam elements to promote buckling in a controlled and predictable manner during a head-on

impact. A breakaway cable provides enough tension in the system to redirect a vehicle within the LON during a lateral impact.

The SRT-350™ meets the requirements of NCHRP Report 350 TL-3 crash testing criteria. It is a gating system and will require a clear area behind the device. The cost of a single unit is about $1150. The system can be installed either in a straight-line flare or parabolic flare and the width of the impact nose is 0.32 m (1.0 ft). This system is not low maintenance because after an impact all damaged or destroyed parts must be repaired or replaced.

Figure 4-6 Six Post Slotted Rail Terminal (SKT-350™)

Figure 4-7 Eight Post Slotted Rail Terminal (SKT-350™)

4.2. CRASH CUSHIONS

4.2.1. REACT 350® System

Web Site: www.energyabsorption.com/products/products_react350_impact.asp

The REACT 350® system is manufactured by Energy Absorption Systems, Inc. and was accepted for use on the NHS by the FHWA in April 1995. The system consists of a row of HDPE cylinders and anchored cables that hold the cylinders in place. When the device is impacted head-on, the cylinders collapse as they absorb energy. During a lateral impact, tension in the cable will redirect the vehicle. After a design head-on impact the system will return to over 90% of its original length, can withstand multiple impacts, and requires little to no maintenance. To completely reset the system maintenance crews have to pull the cylinders into place with a tow cable and truck. This system offers a range of sizes that are designed for impact speeds ranging from 72 km/h (45mph) to 110 km/h (68 mph) and is available in wide versions in a variety of configurations

The REACT 350® meets the requirements of NCHRP Report 350 TL-3 crash testing criteria. It is a non-gating system and is installed parallel to the roadway. The cost of the TL-3 narrow (24-inch) unit is about $30,500.

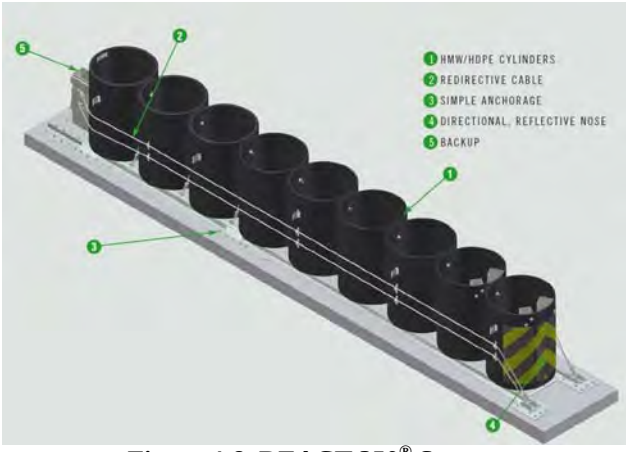

Figure 4-8 REACT 350® System

4.2.2. Compressor™ Attenuator

Web Site: www.traffixdevices.com/cgi-local/SoftCart.exe/compressor.htm?L+scstore+npgg6925ff85d885+1249384904

The Compressor™ attenuator is manufactured by TrafFix Devices Inc. and was accepted for use on the NHS by the FHWA in February 2007. This system consists of six HDPE modules and steel side fender panels. The modules consist of two HDPE halves that are in the shape of a concave and convex curvature. The first two modules are 0.6 m (24") tall and have a wall thickness of 38.1 mm (1.5"), the third module is 1.22 m (48") tall and has a wall thickness of 38.1 mm (1.5"), and the final three modules are 1.22 m (48") tall and have a wall thickness of 47.6 mm (1.9"). During a head-on impact the modules collapse, absorbing the impact energy, and the side panels telescope backward. During a lateral impact the side panels will redirect the vehicle. After a design impact the system will return to over 90% of its original length, it will be able to withstand multiple impacts, and requires little to no maintenance. To completely reset the system, maintenance crews have to pull the modules into place with a tow cable and truck.

The Compressor™ meets the requirements of NCHRP Report 350 TL-3 crash testing criteria. It is a non-gating system and is installed parallel to the roadway. After most design impacts the system requires little to no maintenance but will need to be pulled into place before it can be fully reset. The cost of a single unit is about $33,000.

Figure 4-9 Compressor™ Attenuator

4.2.3. QuadGuard® LMC System

Web Site: www.energyabsorption.com/products/products_quadguard_lmc.asp

The QuadGuard® LMC system is manufactured by Energy Absorption Systems, Inc. and was accepted for use on the NHS by the FHWA in December 1997. The system consists of bays between collapsible diaphragms that contain, except for the first two bays, elastomeric cylinders that are oriented horizontally. The sides of the system are protected by lapped "Quad-Beam" fender panels. A vertically-oriented elastomeric cylinder comprises the nose of the system. During a head-on impact the diaphragms collapse, the side panels telescope and the cylinders are crushed as they absorb the impact energy. After the impact the cylinders return to their original shape, restoring the system. After most design impacts the system can be reused with little to no maintenance. During lateral impacts the "Quad-beam" panels will redirect the vehicle. This system comes in widths ranging from 910 mm (36") to 2300 mm (90").

The QuadGuard® LMC system meets the requirements of NCHRP Report 350 TL-3 crash testing criteria. It is a non-gating system and is installed parallel to the roadway. This system is self-restoring after most design impacts and requires little to no maintenance. The cost of the TL-3 910 mm (36") wide unit is about $50,000.

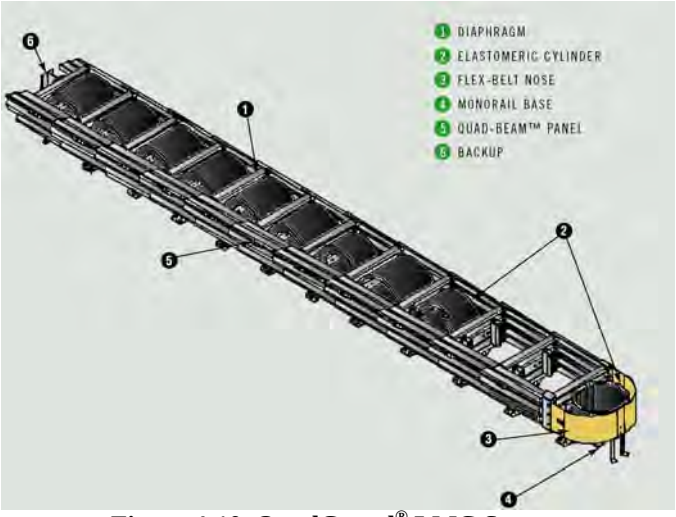

Figure 4-10 QuadGuard® LMC System

4.2.4. QuadGuard® Elite System

Web Site: www.energyabsorption.com/products/products_quadguard_elite.asp

The QuadGuard® Elite system is manufactured by Energy Absorption Systems, Inc. and was accepted for use on the NHS by the FHWA in December 1998. This system is essentially the same system as the QuadGuard® LMC except that the elastomeric cylinders have been replaced with less expensive HDPE cylinders. This system has units that range in width from 610mm (24") to 2300 mm (90").

The QuadGuard® Elite system meets the requirement of the NCHRP Report 350 TL-3 crash testing criteria. The system is non-gating and is installed parallel to the roadway. This system is

largely self-restoring after most design impacts and requires little to no maintenance. The cost of the TL-3 610mm (24") wide unit is about $20,000.

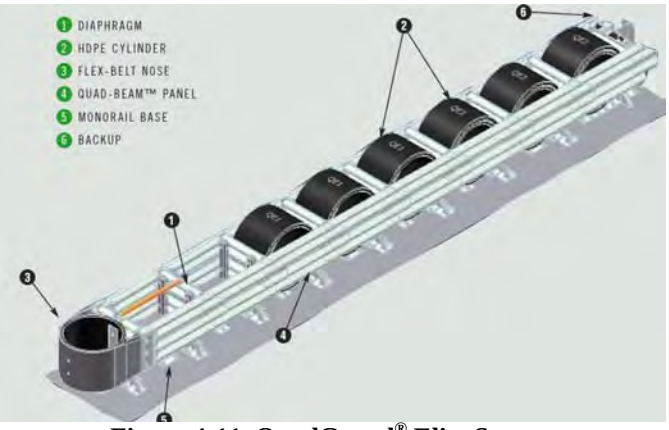

Figure 4-11 QuadGuard® Elite System

4.2.5. Hybrid Energy Absorbing Reusable Terminal (HEART™) System

Web Site: www.highwayguardrail.com/products/heart.html

The HEART™ is manufactured by Trinity Highway Products and was accepted for use on the NHS by the FHWA in March 2005. The system consists of a series of diaphragms, deformed (hinged) HDPE side paneling, and an HDPE nose. The diaphragms are connected by the HDPE paneling. When the system is impacted head-on, the nose and diaphragms collapse and the bending resistance of the HDPE paneling absorb the kinetic energy of the impact. During lateral impact the HDPE paneling will redirect the vehicle. The system is mostly self-restoring and can have multiple design impacts with little to no repair. To completely reset the system it must be pulled back into its original position with a truck and the parts that hold it in place must be replaced.

The HEART™ meets the requirements of NCHRP Report 350 TL-3 crash testing criteria. It is a non-gating system and is installed parallel to the roadway. The system requires little to no maintenance after impact. The HEART™ is not presently being sold by Trinity and no cost is currently established.

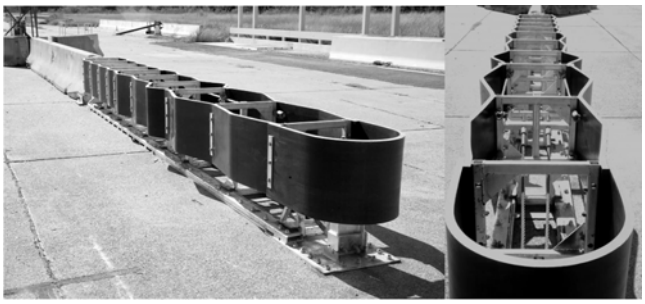

Figure 4-12 Hybrid Energy Absorbing Reusable Terminal (HEART™) System

4.2.6. Smart Cushion Innovations (SCI™) Crash Attenuator

Web Site: www.workareaprotection.com/attenuator.htm

The SCI™ is manufactured by SCI Products Inc. and was accepted for use on the NHS by the FHWA in September 2003. The system is comprised of a front sled assembly, a series of steel frame bays, telescoping side panels, a hydraulic piston cylinder device, and a 28.5-mm (1.125-in) diameter steel cable. The steel cable is attached to the back of the front sled assembly and is routed around a series of sheaves before it is anchored to the ground. During a design head-on impact the front sled is pushed back, collapsing the steel bays and telescoping the side panels. Energy is absorbed through the friction in the cable and the hydraulic piston cylinder device as the sled is pushed back. Lateral impacts are redirected by the steel bays and side paneling. After a head-on impact the system will need to be reset by having the front sled pulled back into its original position.

The SCI™ meets the requirements of NCHRP Report 350 TL-3 crash testing criteria. It is a non-gating system and is installed parallel to the roadway. The SCI™ is not self-restoring, but is reusable after a design impact with little to no repair. The system will have to be reset after a head-on impact. The cost of a single unit is about $20,500.

Figure 4-13 Smart Cushion Innovations (SCI™) Crash Attenuator

4.2.7. Universal TAU-II® Crash Cushion Family

Web Site: www.barriersystemsinc.com/#/tau-ii

The Universal TAU-II® is manufactured by Barrier Systems, Inc. and was accepted for use on the NHS by the FHWA in September 2001. The system consists of energy absorbing cartridges made of black, cross-link polyethylene. The cartridges are positioned in bays between steel diaphragms. During a head-on impact the bays collapse and crush the cartridges which absorb the kinetic energy and bring the vehicle to a stop. On the side of the crash cushion are thrie-beam guardrail panels that redirect the vehicle during a lateral impact and telescope during head-on impacts. This system has a wide range of configurations that includes design speeds of 50 km/h to 110 km/h (30 mph to 70 mph) and protects hazards up to 2600 mm (102”) wide.

The TAU-II® system meets the requirements of NCHRP Report 350 TL-3 crash testing criteria. It is a non-gating crash cushion that is installed parallel to the roadway. The TUA-II® does not self-restore itself but can be reused after an impact. Before reuse, the system must be reset and the crushed cartridges replaced. The cost of the 27” Wide TAU II 100 km/h Test Level 3 unit ranges from about $15,000 to $17,000.

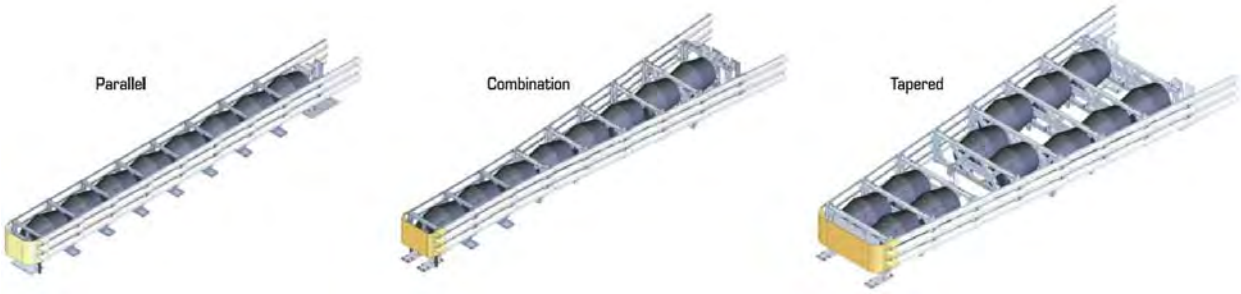

Figure 4-14 Different Configurations of the Universal TAU-II® System

4.2.8. QuadGuard® Crash Cushion Family

Web Site: www.energyabsorption.com/products/products_quadguard_crash.asp

The QuadGuard® system is manufactured by Energy Absorption Systems, Inc. and was accepted for use on the NHS by the FHWA in June 1996, with a wider version accepted in July 1997. The system consists of collapsible bays that contain an energy absorbing cartridge. There are two types of cartridges: Type I cartridges in the front of the system, for small car impacts, and Type II cartridges are in the rear of the system, for pick-up truck impacts. During a head-on impact the bays collapse and the cartridges are crushed, absorbing the impact energy. During a lateral impact, the "Quad-beam" panels on the side of the system redirect the vehicle. These panels telescope during a head-on impact. This system has models that can protect hazards up to 3050 mm (120") in width.

The QuadGuard® system meets the requirements of NCHRP Report 350 TL-3 crash testing criteria. It is a non-gating device and is installed parallel to the roadway. The QuadGuard® system is not a self-restoring system. After a design impact maintenance crews will have to reset the system, repair any damaged parts, and replace any crushed cartridges. The cost of the TL-3 610 mm (24") wide unit is about $15,500.

Figure 4-15 QuadGuard® System

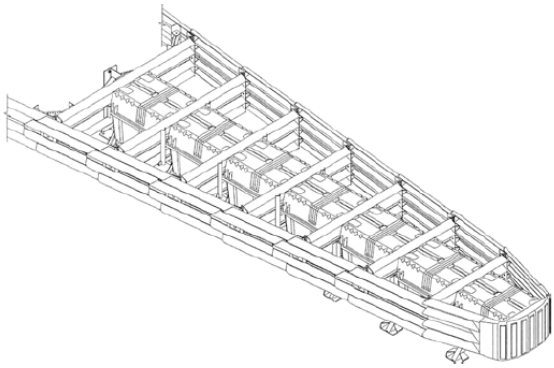

Figure 4-16 Wide QuadGuard® System

4.2.9. The Quest® System

Web Site: www.energyabsorption.com/products/products_questimpact.asp

The Quest® system is manufactured by Energy Absorption Systems, Inc. and was accepted for use on the NHS by the FHWA in February 2005. The Quest® system consists of the following principal components: front anchor, a backup assembly with anchors, a flexible nose piece, a trigger mechanism, a sled, a bridge, a diaphragm, front and rear "shaper" rails, and W-beam side panels. During a design head-on impact the nose piece collapses and the trigger mechanism releases the sled. The sled moves downstream on the front "shaper" rails. "Shapers" attached to the sled deform the front "shaper" rail and when the sled reaches the diaphragm the resistance increases as the rear "shaper" rails are pushed through "shapers" attached to the backup. As the sled moves down the system the W-beam panels tear away from bays 2 and 3. Momentum transfer, deformation of the rails, and the tearing away of the panels all absorb the kinetic energy of the impacting vehicle. During a lateral impact the system will go into tension due to being secured by the front and backup anchors which will redirect the vehicle. The "shaper" rails will have to be replaced along with any additional damaged parts after a head-on impact.

The Quest® system meets the requirements of NCHPR Report 350 TL-3 crash testing criteria. It is a non-gating system and is installed parallel to the roadway. The Quest® is not a self-restoring system and uses sacrificial elements to absorb energy. These elements will have to be replaced after an impact. The cost of a single unit is about $10,500.

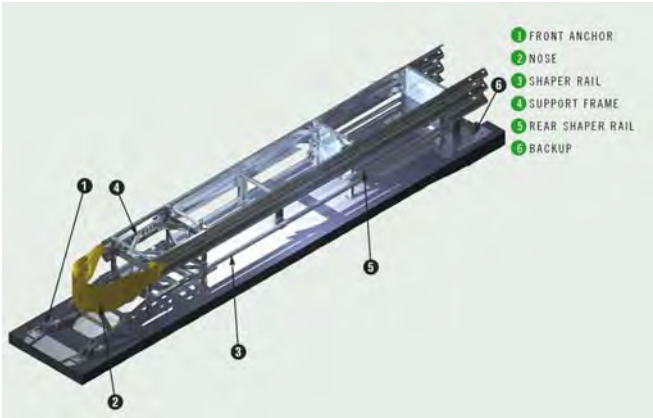

Figure 4-17 Quest® System

4.2.10. Trinity Attenuating Crash Cushion (TRACC™) Family

Web Site: www.highwayguardrail.com/products/tracc.html

The TRACC™ is manufactured by Trinity Highway Products and was accepted for use on the NHS by the FHWA in November 1998. The system consists of an impact sled, a pair of sacrificial guidance tracks, collapsible steel diaphragms, and steel side panels. The steel diaphragms and side panel redirect a vehicle during a lateral impact. During a design head-on impact the sled is pushed downstream, collapsing the diaphragms. Hardened steel cutters on the

sled slice along the guidance tracks. This cutting action absorbs the energy of the vehicle brings it to a stop. After an impact, all the damaged or destroyed parts must be replaced. This system has units that can be customized to protect any width.

The TRACC™ meets the requirements of NCHRP Report 350 TL-3 crash testing criteria. It is a non-gating system and is installed parallel to the roadway. The TRACC™ is not a self-restoring system and uses sacrificial elements to absorb impact energy. The cost of the TL-3 610 mm (24") wide unit is about $12,500.

Figure 4-18 Trinity Attenuating Crash Cushion (TRACC™)

4.2.11. Crash Cushion Attenuating Terminal (CAT™)

Web Site: www.highwayguardrail.com/products/cat350.html

The CAT™ is manufactured by Trinity Highway Products and was accepted for use on the NHS by the FHWA in May 1996. The CAT™ uses a combination of slotted W-beam elements, upstream cable, and breakaway posts. During a design head-on impact the nose collapses and post 1 breaks away, disengaging the upstream cable. The vehicle continues pushing against the nose which shears the slots in the W-beam. The impact energy is absorbed as the vehicle continues to hit the breakaway posts and shear the slots in the guardrail. During a lateral impact the upstream cable provides tension in the system which redirects the vehicle within the LON. All damaged or destroyed parts must be replaced after an impact.

The CAT™ meets the requirements of NCHRP Report 350 TL-3 crash testing criteria. It is a gating system and is installed parallel to the roadway. The CAT™ is not a self-restoring crash cushion; it uses sacrificial elements to bring a vehicle to a stop. The cost of a single unit is about $3,500.

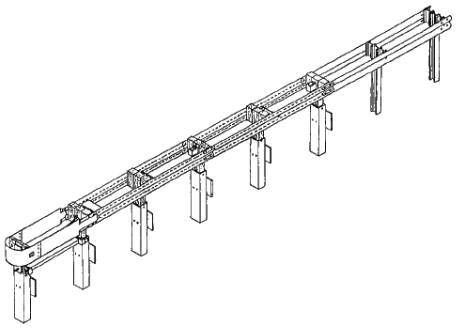

Figure 4-19 Crash Cushion Attenuating Terminal (CAT™)

4.2.12. Brakemaster® 350 System

Web Site: www.energyabsorption.com/products/products_brakemaster350_crash.asp

The Brakemaster® 350 System is manufactured by Energy Absorption Systems, Inc. and was accepted for use on the NHS by the FHWA in June 1997. The Brakemaster® system consists of two parallel rows of W-beam guardrail panels. A cable runs the entire length of the system and is secured at the anchor in the nose and at the W-beam guardrail post at the downstream end of the system. The system is comprised of five equal length bays. The bay at the nose section is supported by the Brakemaster® Assembly which includes a cable brake mechanism. When a vehicle impacts the system head-on, the system collapses longitudinally and the kinetic energy is absorbed by the friction in the cable brake mechanism as the Brakemaster® Assembly is pushed back along the cable. At the same time, the W-beam side panels telescope into each other. During a lateral impact, the tension in the cable redirects the vehicle within the LON and limits the lateral movement of the crash cushion.

The Brakemaster® 350 meets the requirements of NCHRP Report 350 TL-3 crash testing criteria. It is a gating crash cushion and will require a clear area behind the device. The system is installed parallel to the roadway. The Brakemaster® 350 is not a self-restoring system. Damaged or destroyed parts must be repaired or replaced after an impact. The cost of a single unit is about $9,500.

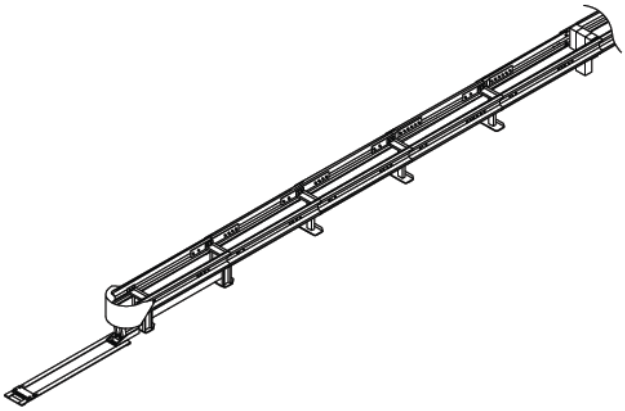

Figure 4-20 Brakemaster® 350 System

5. REFERENCES

1) Ross, H. E. Jr., Sicking, D. L., and Zimmer, R. A., "Recommended Procedures for the Safety Performance Evaluation of Highway Features", Transportation Research Board, National Cooperative Highway Research Program Report 350, Washington, D. C., 1993.

2) Baxter, John R., FHWA Acceptance Letter CC-84, http://safety.fhwa.dot.gov/roadway_dept/policy_guide/road_hardware/barriers/pdf/cc84.pdf

3) Carlson, E. Dean, "Traffic Barrier Safety Policy and Guidance", FHWA Memorandum from Executive Director to Regional Administrators, Washington, D. C., Sept. 29, 1994.

4) Carney III, John F., "Development of Maintenance-Free Highway Safety Appurtenances", Report WA RD 308.1, Washington State Department of Transportation, Olympia, WA, 1992.

6. APPENDICES

6.1. MATERIAL TEST SUMMARIES

6.1.1. Test # ET- 601, Phase I Dynamic Testing (originally ET-101)

Test No. ET-601 was conducted at the Caltrans Dynamic Test Facility on the California Highway Patrol (CHP) Academy grounds in West Sacramento, CA on Oct. 22, 1997. This test was the first in a series of instrumented crash tests of the FHWA Regional Pooled Fund Study SPR-3(043), *Development of a New Guardrail End Treatment, Phase II.* It was conducted by Gary Gauthier, project manager of the research project, of the Caltrans Facilities Research Branch, Office of Research, New Technology and Research Program.

6.1.1.1. Purpose

The purpose of this test is to determine the "Force versus Deflection" curve for a cluster of three 20" (508 mm) outside diameter (OD) SDR 21 series cylinders at ambient temperature.

6.1.1.2. Test Article

Three high density polyethylene (HDPE) cylinders were cut from Sclairpipe (PE 345434C for PE 3408 per ASTM D 3350), a brand from KWH pipe. The cylinders were from the SDR 21 series, had an OD of 20" (508 mm), and were 24" (610 m) high. The cylinders used were designated 7-21, 8-21 and 9-21. They were not impacted prior to this test. One buffer cylinder between 9-21 and the loading plate was used. The buffer cylinder was from the SDR 11 series, had an OD of 20" (508 mm), and was 24" (610 mm) high. It had been impacted 5 times prior and was designated 1-11.

Initial outside diameters:
7-21: 49.5 cm (19.5")
8-21: 49.5 cm (19.5")
9-21: 50.0 cm (19.7")
1-11: 46.0 cm (18.1")
The rims of the cylinders were painted white for clarity in the film.

These 4 cylinders were connected together and placed in line on top of two steel beams (cylinder rails) bolted to the reaction wall foundation. They were restrained from vertical and lateral movement via brackets connected to a rod anchored to the foundation (cylinder guide rod). The rod was placed between the cylinder rails. The buffer cylinder was bolted to the loading plate attached to the reaction wall.

6.1.1.3. Test Vehicle

The test vehicle used was a Caltrans lightweight test bogie with inertial mass of 986 kg (2174 lbs). No data acquisition instruments were on board. The bogie was towed by a one-ton, dual-wheeled, GMC Sierra pickup, C4489. The bogie was guided by a guide arm on the right front wheel, tracking on the aluminum guide rail. In addition, the bogie ran along a tensioned wire rope cable that was inserted between two guides attached beneath the bogie. The guides were centered along the width of the bogie at the front and rear axles.

6.1.1.4. Data Acquisition

Four 200 kip (890 kN) compression load cells were sandwiched between the loading and reaction plates of the reaction wall. Four high speed cameras were set up to film the impact: one on the tele-scaffold overhead, above the cylinders, one on top of the reaction wall looking upstream, one looking at the right side of the cylinders, and one positioned to the right of the guide rail looking downstream. The Gismo camera and Betacam video camera were used to pan the bogie travel. A tape switch placed on cylinder 7-21 activated a red LED light on a box (placed on the right side of cylinder 1-11) on impact. This also triggered the data acquisition from the load cells. A marked rod was suspended above the cylinders to use as a reference to record cylinder deflections.

6.1.1.5. Impact and Exit

The intended impact speed based on the calculated energy to completely collapse the three SDR 21 series cylinders with a surface temperature of 84°F, was 56.0 km/hr (34.8 mph). The actual impact speed was 53.9 km/hr (33.5 mph). The ambient temperature was 66°F with sunny skies. The bogie impacted the first cylinder (7-21) head-on and on center. Cylinders 7-21, 8-21, and 9-21 collapsed completely. The buffer cylinder 1-11 collapsed partially.

After impact the bogie rebounded backwards and the brakes were applied. It stopped beyond the tow release bar, shifting laterally about two feet to the left, stretching the tensioned guidance cable. The guide arm released and stopped properly.

6.1.1.6. Results

Ed Ung had informed me prior to starting the test that he was not able to properly acquire data from the load cells due to excessive noise. I ran the test anyway to gather film data. Although the test was conducted properly with no other major problems, the test purpose was not achieved because no force data could be obtained. One camera did not run. Because the bogie energy was greater than that which the first three cylinders could absorb, the buffer cylinder compressed partially. Part of this compression occurred before the first three completely collapsed. The film was analyzed to determine the velocity and accelerations of the bogie while being slowed to a stop by the cylinders.

Gary P. Gauthier
Associate Materials & Research Engineer

FILM ANALYSIS
DEVELOPMENT OF A NEW GUARDRAIL END TREATMENT
BOGIE CRASH TEST ET-601

Overhead camera view

FILM SPEED

PIP FREQ 1 every (s)	#PIPS*	FULL FRAMES	LAST PIP Advanced**	FRAME LENGTH**	PARTIAL FRAME +	SPEED (frs/sec)
0.01	20	80	5.6	9.6	0.58	402.9
0.01	19	76	5.4	9.6	0.56	403.0
				avg. film speed=		403

*don't count first pip meas'd from
**analyzer measurement

REFERENCE DISTANCES MEASURED ON BOGIE

points are the 3/8" bolts on top center beam of bogie, #1 in front

POINTS	FILM**	ACTUAL(in)	DIST(m)	m/film unit
1 to 2	0.47	2.75	0.070	0.149
3 to 4	0.43	2.75	0.070	0.162
1 to 3	7.56	45.625	1.159	0.153
2 to 4	7.52	45.625	1.159	0.154
			AVG.=	0.155

MOTION ANALYSIS TEST 601

Bogie impacting cylinders. Point tracked is foremost 3/8" bolt on top center beam of bogie, next to impact plate

FRAME	X**	Y**	DESCRIPTION		TIME(s)	TIME▲(s)	X(m)	V(m/s)	a(m/s/s)	g's
0	16.24	7.89	impact light first on		0.000	0.00000	2.51	15.00		
5	15.11	7.91			0.012	0.01241	2.34	13.70	-105	-10.7
10	13.98	8.04			0.025	0.01241	2.16	14.50	64	6.6
15	13.07	7.69			0.037	0.01241	2.02	11.28	-259	-26.4
20	11.90	7.90			0.050	0.01241	1.84	14.50	259	26.4
25	10.77	7.89			0.062	0.01241	1.67	13.70	-64	-6.6
30	9.79	7.90			0.074	0.01241	1.51	12.89	-65	-6.7
35	8.89	7.90			0.087	0.01241	1.37	11.28	-130	-13.2
40	8.07	7.90			0.099	0.01241	1.25	9.67	-130	-13.2
45	7.40	7.90			0.112	0.01241	1.14	8.86	-65	-6.7
50	6.99	7.81			0.124	0.01241	1.08	4.83	-325	-33.1
51	6.90	7.81			0.127	0.00248	1.07	4.03	-323	-32.9
52	6.86	7.80			0.129	0.00248	1.06	4.03	0	0.0
53	6.82	7.80			0.132	0.00248	1.05	4.03	0	0.0
54	6.80	7.80			0.134	0.00248	1.05	0.00	-1625	-165.6
55	6.76	7.80			0.136	0.00248	1.05	0.00	0	0.0
56	6.76	7.80			0.139	0.00248	1.05	0.00	0	0.0
57	6.77	7.82			0.141	0.00248	1.05	0.00	0	0.0
58	6.78	7.79			0.144	0.00248	1.05	0.00	0	0.0
59	6.78	7.79			0.146	0.00248	1.05	0.00	0	0.0
60	6.80	7.79			0.149	0.00248	1.05	0.00	0	0.0
61	6.84	7.79			0.151	0.00248	1.06	-4.03	-1625	-165.6
62	6.88	7.79			0.154	0.00248	1.06	0.00	1625	165.6
63	6.93	7.79			0.156	0.00248	1.07	-4.03	-1625	-165.6
64	6.99	7.79			0.159	0.00248	1.08	-4.03	0	0.0
65	7.04	7.79			0.161	0.00248	1.09	-4.03	0	0.0
66	7.11	7.77			0.164	0.00248	1.10	-4.03	0	0.0
67	7.18	7.89			0.166	0.00248	1.11	-4.03	0	0.0
68	7.23	7.71			0.169	0.00248	1.12	-4.03	0	0.0
69	7.31	7.77			0.171	0.00248	1.13	-4.03	0	0.0
70	7.38	7.76			0.174	0.00248	1.14	-4.03	0	0.0
75	7.79	7.78			0.186	0.01241	1.20	-4.83	-64	-6.6

Figure 6-1 ET-601 Film Analysis Data Sheet

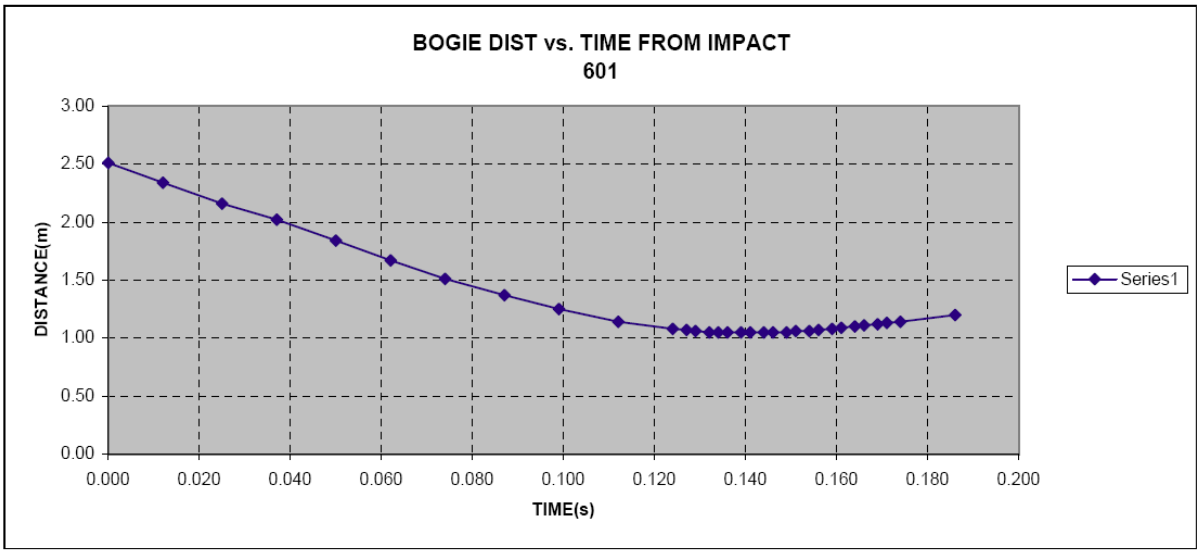

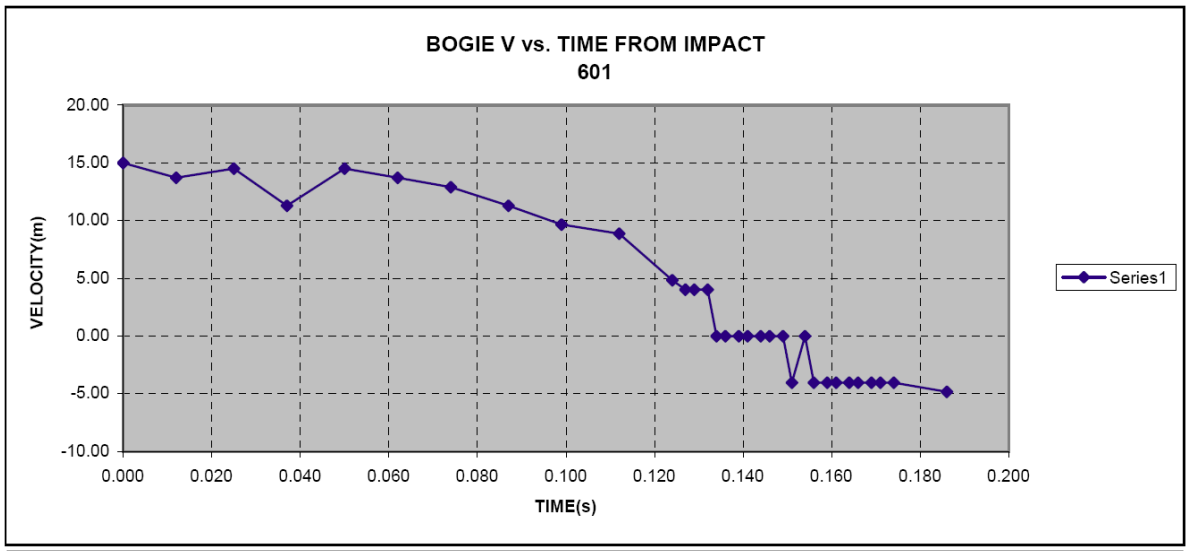

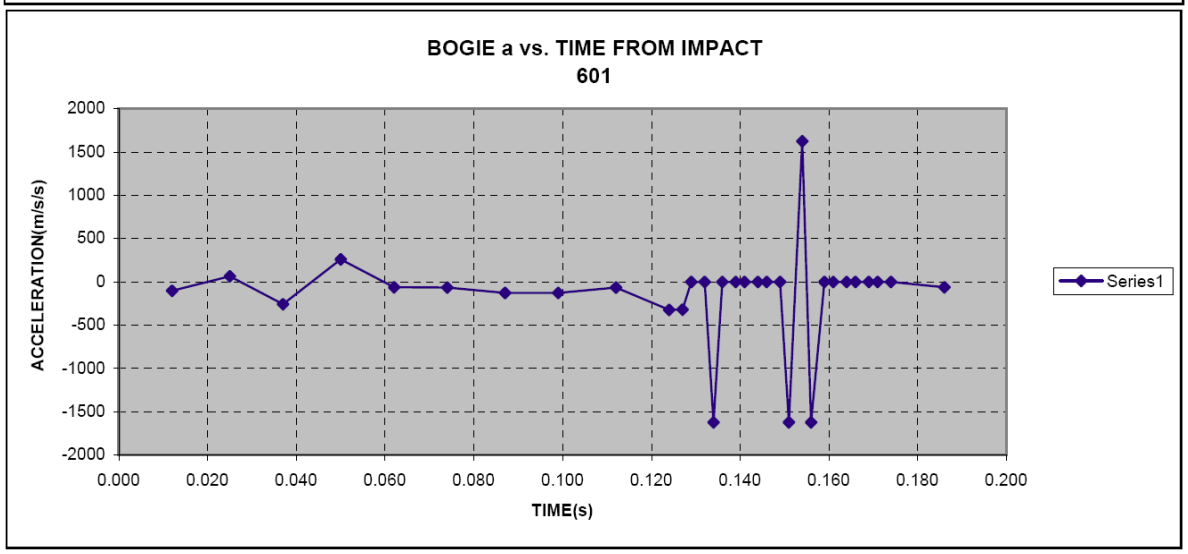

Figure 6-2 ET-601 Film Analysis Graphs

6.1.2. Test # ET- 602, Phase I Dynamic Testing

Test No. ET-602 was conducted at the Caltrans Dynamic Test Facility on the CHP Academy grounds in West Sacramento, CA on Dec. 3, 1997. This test was the second in a series of instrumented crash tests of the FHWA Regional Pooled Fund Study SPR-3(043), *Development of a New Guardrail End Treatment, Phase II.* It was conducted by Gary Gauthier, project manager of the research project, of the Caltrans Facilities Research Branch, Office of Research, New Technology and Research Program.

6.1.2.1. Purpose

The purpose of this test is to determine the "Force versus Deflection" curve for a cluster of three 20" (508 mm) OD SDR 21 series cylinders at ambient temperature.

6.1.2.2. Test Article

Three high density polyethylene (HDPE) cylinders had been cut from Sclairpipe (PE 345434C for PE 3408 per ASTM D 3350), a brand from KWH pipe. The cylinders were from the SDR 21 series, had an OD of 20" (508 mm), and were 24" (610 mm) high. The cylinders used were designated 7-21, 8-21 and 9-21. They were impacted once before in test ET-601. One buffer cylinder between 9-21 and the loading plate was used. The buffer cylinder was from the SDR 11 series, had an OD of 20" (508 mm), and was 24" (610 mm) high. It had been impacted 6 times prior and designated 1-11.

Initial outside diameters in cm:
7-21: 46 cm (18.1")
8-21: 46 cm (18.1")
9-21: 46 cm (18.1")
1-11: 46 cm (18.1")
The insides of the cylinders were painted white and the outsides painted either beige or yellow for contrast. The rims of the cylinders were left black for clarity in the film.

These 4 cylinders were connected together and placed in line on top of two steel beams (cylinder rails) bolted to the reaction wall foundation. They were restrained from vertical and lateral movement via brackets connected to a rod anchored to the foundation (cylinder guide rod). The rod was placed in between the cylinder rails.

The buffer cylinder was bolted to the loading plate attached to the reaction wall. Three 4x4 blocks of wood were wedged in the buffer cylinder, in line with the other cylinders, to provide a rigid transfer of force to the loading plate while the first three cylinders collapse.

6.1.2.3. Test Vehicle

The test vehicle was a Caltrans lightweight test bogie with inertial mass of 986 kg (2174 lbs). No data acquisition instruments were on board. The bogie was towed by a one-ton, dual-wheeled, GMC Sierra pickup, C4489. The bogie was guided by a guide arm on the right front wheel, tracking on the aluminum guide rail. The tensioned wire rope cable was discontinued

with this test. Its purpose was to prevent the bogie from straying during its rebound, but it gets stretched and could possibly break and cause injury. The brake pressure was increased in order to stop the bogie more quickly in its rebound path.

6.1.2.4. Data Acquisition

Four 200 kip (890 kN) compression load cells were sandwiched between the loading and reaction plates of the reaction wall. Four high speed cameras were set up to film the impact: one overhead above the cylinders, one on top of the reaction wall looking upstream, one looking at the right side of the cylinders, and one positioned to the right of the guide rail looking downstream. Two high intensity flood lamps were positioned on the tele-scaffold with the overhead camera to illuminate the test article. The Gismo camera and Betacam video camera were used to pan the bogie travel. A tape switch placed on cylinder 7-21 activated a red LED light on a box (placed on the right side of cylinder 1-11) on impact. This also triggered the data acquisition from the load cells. A marked rod was suspended above the cylinders to use as a reference to record cylinder deflections.

6.1.2.5. Impact and Exit

The intended impact speed based on the calculated energy to completely collapse the three SDR 21 series cylinders with a surface temperature of 55°F was 63.0 km/hr (39.1 mph). The actual impact speed was 64.6 km/hr (40.1 mph). The ambient temperature was 52°F with overcast skies. The bogie impacted the first cylinder (7-21) head-on and on center. Cylinders 7-21, 8-21, and 9-21 collapsed completely. The buffer cylinder 1-11 remained essentially rigid until the first three were completely collapsed, at which time the wood blocks split and popped out of the cylinder.

After impact the bogie rebounded backwards and the brakes were applied. It stopped approximately at the tow cable sheave and essentially on the centerline. The guide arm released and stopped without damage, but the dragline broke.

6.1.2.6. Results

The test was conducted successfully for the most part. All cameras recorded, as well as the load cell data acquisition system. There was some question, however, as to the accuracy of the load cell data. The cells may not have been seated squarely between the loading and reaction plates, since Ed Ung had difficulty arriving at stable, uniform preloads. They were also not symmetrically positioned vertically against the plates. The floodlights appeared to flicker in the film.

The first three cylinders essentially collapsed completely before the buffer cylinder deflected. The wood blocks popped out of the buffer cylinder approximately when the first three cylinders were collapsed, allowing the buffer cylinder to deflect slightly. The overhead camera speed was not set at 400 frames per second (fps), and ran at a slower speed. Hence, the side view film was used rather than the overhead view to analyze deflections. The film analysis could not be performed as precisely as desired, because it was difficult to determine the exact impact time from the side camera. Also, this camera ran rather slowly at 359 fps. The desired rate is 400 fps,

which provides more data points for analysis. Force versus time data from the load cells was obtained, totaled for all four load cells, and every three points averaged to arrive at a force versus deflection and force versus time plots. It appears that the large increase in force at about 70 ms is due to the bogie still moving into the stiffened buffer cylinder after collapsing the first three cylinders. The speed of the bogie at the point of collapsing the first three cylinders was approximately 11 m/s (36.1 ft/s), and had to be decelerated to 0 m/s (0 ft/s) in a very short distance, 0.06 m (2.36”). This induced the very high forces, which rocked the reaction wall. No damage to the reaction wall was observed. The right front wheel stop on the bogie was bent, however. The peak dynamic force was about 260 kips (1157 kN). The reaction wall was designed for a static loading of 110 kips (489 kN).

6.1.2.7. Recommendations

The guidance cable does not seem to be necessary since it was not used and the bogie stopped safely. The buffer system needs to be redesigned, allowing more deceleration distance after complete collapse of the test cylinders. It must remain rigid, however, until the test cylinders have completely collapsed. A new load cell frame needs to be fabricated to ensure accurate force readings. A timer in milliseconds, visible in overhead and side views, should be employed to synchronize film views.

Gary P. Gauthier
Associate Materials & Research Engineer

FILM ANALYSIS
DEVELOPMENT OF A NEW GUARDRAIL END TREATMENT
BOGIE CRASH TEST ET-602

Side view camera
METH. A: All pips were not visible on projector, so pips & frames were measured on film with calipers
METH. B: Pips and frames were counted on film itself

FILM SPEED

	PIP FREQ 1 every (s)	DIST BET 2 PIPS	FRAME DIST.	FRAMES per PIP	# PIPS	# FRAMES	SPEED (frs/sec)
METH. A	0.01	1.075	0.298	3.61	X	X	360.7
METH. B	0.01	X	X	X	7	25.00	357.1
					avg. film speed=		359

*don't count first pip meas'd from
**analyzer measurement

REFERENCE DISTANCES
MEASURED ON DEFLECTION ROD

points taken are white and black markers on rod, 10 cm long

POINTS	FILM**	DIST(m)	m/film unit
	0.511	0.100	0.196
	0.515	0.100	0.194
	0.518	0.100	0.193
	0.514	0.100	0.195
		AVG.=	**0.194**

MOTION ANALYSIS TEST 602

Bogie impacting cylinders. Point tracked is top center of impact plate on bogie.

FRAME	X**	Y**	DESCRIPTION	TIME(s)	TIME▲(s)	X(m)	V(m/s)	a(m/s/s)	g's	IMPACT ▲X	IMPACT ▲TIME
0	3.54	10.62	before impact	0.000	0.00000	0.69					
1	3.80	10.52		0.003	0.00279	0.74	17.92	6423	654.7		
2	4.06	10.53		0.006	0.00279	0.79	17.92	0	0.0		
3	4.32	10.54		0.008	0.00279	0.84	17.92	0	0.0		
4	4.60	10.52		0.011	0.00279	0.89	17.92	0	0.0		
5	4.87	10.52	first definite impact sign	0.014	0.00279	0.95	21.51	1287	131.2	0.00	0.000
6	5.12	10.51		0.017	0.00279	1.00	17.92	-1287	-131.2	0.05	0.003
7	5.38	10.51		0.020	0.00279	1.05	17.92	0	0.0	0.10	0.006
8	5.64	10.52		0.022	0.00279	1.10	17.92	0	0.0	0.15	0.008
9	5.88	10.52		0.025	0.00279	1.14	14.34	-1283	-130.8	0.19	0.011
10	6.14	10.52		0.028	0.00279	1.19	17.92	1283	130.8	0.24	0.014
15	7.33	10.51		0.042	0.01393	1.42	16.51	-101	-10.3	0.47	0.028
20	8.50	10.51		0.056	0.01393	1.65	16.51	0	0.0	0.70	0.042
25	9.62	10.51		0.070	0.01393	1.87	15.79	-52	-5.3	0.92	0.056
26	9.86	10.50		0.072	0.00279	1.92	17.92	763	77.8	0.97	0.058
27	10.05	10.50		0.075	0.00279	1.95	10.75	-2570	-262.0	1.00	0.061
28	10.26	10.50		0.078	0.00279	1.99	14.34	1287	131.2	1.04	0.064
29	10.45	10.49		0.081	0.00279	2.03	14.34	0	0.0	1.08	0.067
30	10.63	10.49		0.084	0.00279	2.07	14.34	0	0.0	1.12	0.070
31	10.82	10.48		0.086	0.00279	2.10	10.75	-1287	-131.2	1.15	0.072
32	10.95	10.47		0.089	0.00279	2.13	10.75	0	0.0	1.18	0.075
33	11.09	10.48	approx. point collapse	0.092	0.00279	2.16	10.75	0	0.0	1.21	0.078
34	11.18	10.47		0.095	0.00279	2.17	3.58	-2570	-262.0		
35	11.25	10.47		0.098	0.00279	2.19	7.17	1287	131.2		
36	11.27	10.48		0.100	0.00279	2.19	0.00	-2570	-262.0		
37	11.27	10.48	block starts rise	0.103	0.00279	2.19	0.00	0	0.0		
38	11.25	10.49		0.106	0.00279	2.19	0.00	0	0.0		
39	11.20	10.49		0.109	0.00279	2.18	-3.58	-1283	-130.8		
40	11.14	10.52		0.111	0.00279	2.17	-3.58	0	0.0		
41	11.12	10.52		0.114	0.00279	2.16	-3.58	0	0.0		
42	11.07	10.57		0.117	0.00279	2.15	-3.58	0	0.0		
43	10.98	10.56		0.120	0.00279	2.13	-7.17	-1287	-131.2		
44	10.92	10.57		0.123	0.00279	2.12	-3.58	1287	131.2		
45	10.85	10.56		0.125	0.00279	2.11	-3.58	0	0.0		
50	10.50	10.55		0.139	0.01393	2.04	-5.03	-104	-10.6		
55	10.12	10.57		0.153	0.01393	1.97	-5.03	0	0.0		
60	9.73	10.57		0.167	0.01393	1.89	-5.74	-51	-5.2		

Figure 6-3 ET-602 Film Analysis Data Sheet

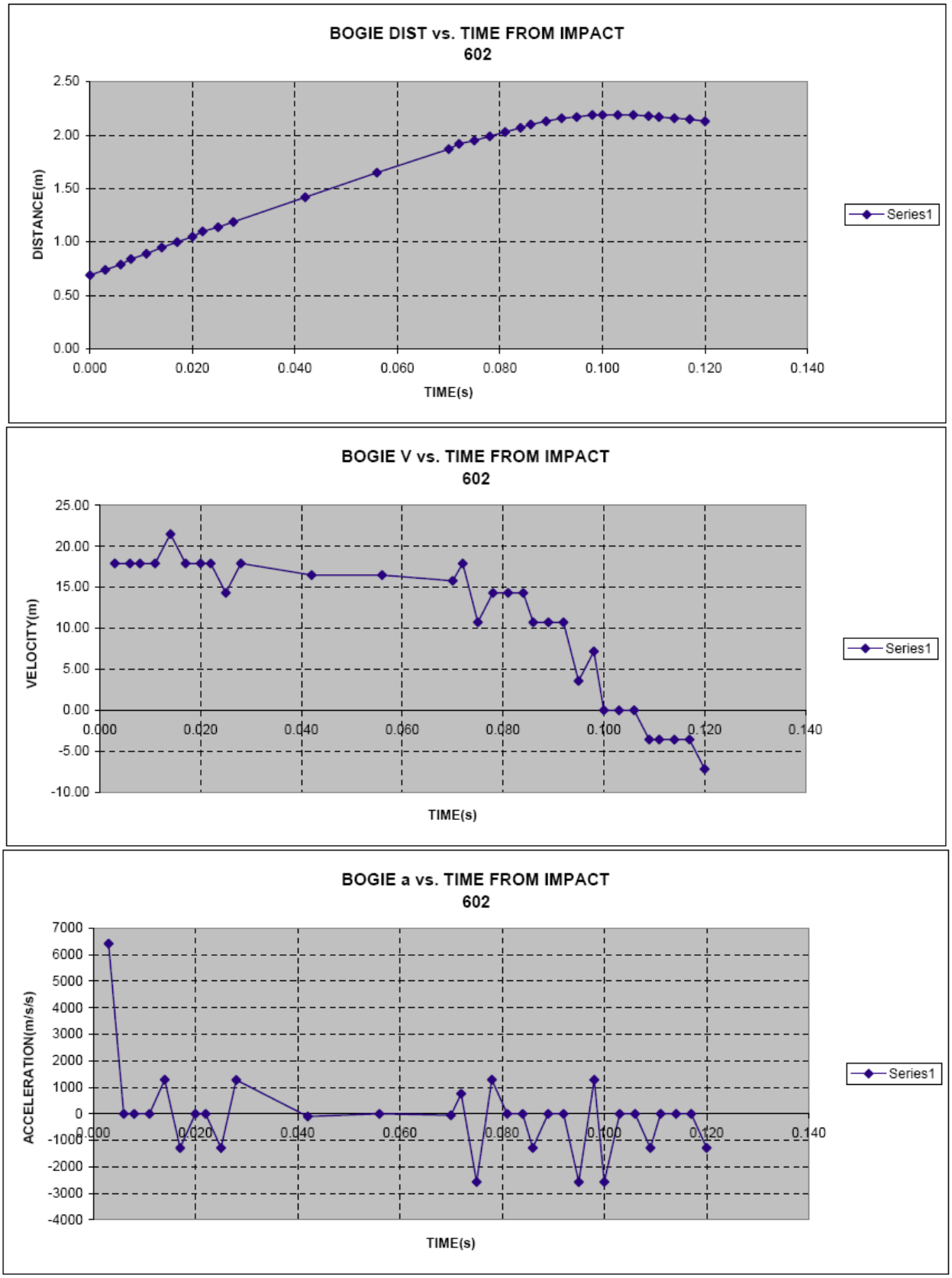

Figure 6-4 ET-602 Film Analysis Graphs

6.1.3. Test # ET- 603, Phase I Dynamic Testing

Test No. ET-603 was conducted at the Caltrans Dynamic Test Facility on the CHP Academy grounds in West Sacramento, CA on Dec. 3, 1997. This test was the third in a series of instrumented crash tests of the FHWA Regional Pooled Fund Study SPR-3(043), *Development of a New Guardrail End Treatment, Phase II.* It was conducted by Gary Gauthier, project manager of the research project, of the Caltrans Facilities Research Branch, Office of Research, New Technology and Research Program.

6.1.3.1. Purpose

The purpose of this test is to determine the "Force versus Deflection" curve for a cluster of three 20" (508 mm) OD SDR 21 series cylinders at ambient temperature.

6.1.3.2. Test Article

Three high density polyethylene (HDPE) cylinders were cut from Sclairpipe (PE 345434C for PE 3408 per ASTM D 3350), a brand from KWH pipe. The cylinders were from the SDR 21 series, had an OD of 20" (508 mm), and were 24" (610 mm) high. The cylinders used were designated 10-21, 11-21 and 12-21. They were never impacted prior to this test. One buffer cylinder between 12-21 and the loading plate was used. The buffer cylinder was from the SDR 11 series, had an OD of 20" (508 mm), and was 24" (610 mm) high. It had never been impacted prior to this test and was designated 2-11.

Initial outside diameters in cm:
10-21: 50 cm (19.7")
11-21: 49 cm (19.3")
12-21: 48 cm (18.9")
2-11: 50 cm (19.7")
The insides of the cylinders were painted white and the outsides painted either beige or yellow for contrast. The rims of the cylinders were left black for clarity in the film.

These 4 cylinders were connected together and placed in line on top of two steel beams (cylinder rails) bolted to the reaction wall foundation. They were restrained from vertical and lateral movement via brackets connected to a rod anchored to the foundation (cylinder guide rod). The rod was placed in between the cylinder rails.

The buffer cylinder was bolted to the loading plate attached to the reaction wall. Three 4x4 blocks of wood were wedged in the buffer cylinder, in line with the other cylinders, to provide a rigid transfer of force to the loading plate while the first three cylinders collapse.

6.1.3.3. Test Vehicle

The test vehicle was a Caltrans lightweight test bogie with inertial mass of 986 kg (2174 lbs). No data acquisition instruments were on board. The bogie was towed by a one-ton, dual-wheeled, GMC Sierra pickup, C4489. The bogie was guided by a guide arm on the right front wheel, tracking on the aluminum guide rail.

6.1.3.4. Data Acquisition

Four 200 kip (890 kN) compression load cells were sandwiched between the loading and reaction plates of the reaction wall. Four high speed cameras were set up to film the impact: one overhead above the cylinders, one on top of the reaction wall looking upstream, one looking at the right side of the cylinders, and one positioned to the right of the guide rail looking downstream. Two high intensity flood lamps were positioned on the tele-scaffold with the overhead camera to illuminate the test article. The Gismo camera and Betacam video camera were used to pan the bogie travel. A tape switch placed on cylinder 10-21 activated a red LED light on a box (placed on the right side of cylinder 2-11) on impact. This also triggered the data acquisition from the load cells. A marked rod was suspended above the cylinders to use as a reference to record cylinder deflections.

6.1.3.5. Impact and Exit

The intended impact speed based on the calculated energy to completely collapse the three SDR 21 series cylinders with a surface temperature of 53°F was 63.0 km/hr (39.1 mph). The actual impact speed was 67.2 km/hr (41.8 mph). The ambient temperature was 53°F with overcast skies. The bogie impacted the first cylinder (10-21) head-on and on center. Cylinders 10-21, 11-21, and 12-21 collapsed completely. The buffer cylinder 2-11 remained essentially rigid until the first three were completely collapsed, at which time the wood blocks split and popped out of the cylinder. After impact the bogie rebounded backwards and the brakes were applied. It stopped approximately at the tow cable sheave and essentially on the centerline.

6.1.3.6. Results

The test was conducted successfully for the most part. All cameras recorded, as well as the load cell data acquisition system. There was some question, however, as to the accuracy of the load cell data. The cells may not have been seated squarely between the loading and reaction plates, since Ed Ung had difficulty arriving at stable, uniform preloads. They were also not symmetrically positioned vertically against the plates. The floodlights appeared to flicker in the film.

The first three cylinders essentially collapsed completely before the buffer cylinder deflected. The wood blocks popped out of the buffer cylinder approximately when the first three cylinders were collapsed, allowing the buffer cylinder to deflect slightly. One block was jettisoned vertically near the overhead camera. The overhead camera speed was not set at 400 fps, and ran at a slower speed. Hence, the side view film was used rather than the overhead view to analyze deflections. The film analysis could not be performed as precisely as desired, because it was difficult to determine the exact impact time from the side camera. Also, this camera ran rather slowly at 352 fps. “Force versus Time” data from the load cells was obtained, totaled for all four load cells, and every three points averaged to arrive at a “Force versus Deflection” and “Force versus Time” plots. It appears that the large increase in force at about 80 ms is due to the bogie still moving into the stiffened buffer cylinder after collapsing the first three cylinders. The speed of the bogie at the point of collapsing the first three cylinders was approximately 10 m/s (33 ft/s), and had to be decelerated to 0 m/s (0 ft/s) in a very short distance, 0.05 m (1.97”). This induced

the very high forces, which rocked the reaction wall. No damage to the reaction wall was observed. The right front wheel stop on the bogie was bent, however. The peak dynamic force was about 178 kips (792 kN). The reaction wall was designed for a static loading of 110 kips (489 kN).

6.1.3.7. Recommendations

The guidance cable does not seem to be necessary since it was not used and the bogie stopped safely. The buffer system needs to be redesigned, allowing more deceleration distance after complete collapse of the test cylinders. It must remain rigid, however, until the test cylinders have completely collapsed. A new load cell frame needs to be fabricated to ensure accurate force readings. A timer in milliseconds, visible in overhead and side views, should be employed to synchronize film views.

Gary P. Gauthier
Associate Materials & Research Engineer

FILM ANALYSIS
DEVELOPMENT OF A NEW GUARDRAIL END TREATMENT
BOGIE CRASH TEST ET-603

Side view camera
METH. A: All pips were not visible on projector, so pips & frames were measured on film with calipers
METH. B: Pips and frames were counted on film itself

FILM SPEED

	PIP FREQ	DIST BET	FRAME	FRAMES	# PIPS*	# FRAMES	SPEED
	1 every (s)	2 PIPS	DIST.	per PIP			(frs/sec)
METH. A	0.01	1.051	0.298	3.53	X	X	352.7
METH. B	0.01	X	X	X	31	109.00	351.6
					avg. film speed=		352

*don't count first pip meas'd from

REFERENCE DISTANCES
MEASURED ON DEFLECTION ROD

points taken are white and black markers on rod, 10 cm long

POINTS	FILM**	DIST(m)	m/film unit
	0.528	0.100	0.189
	0.534	0.100	0.187
	0.505	0.100	0.198
	0.526	0.100	0.190
	0.512	0.100	0.195
		AVG.=	**0.191**

MOTION ANALYSIS TEST 603

Bogie impacting cylinders. Point tracked is top center of impact plate on bogie.

FRAME	X**	Y**	DESCRIPTION	TIME(s)	TIME▲(s)	X(m)	V(m/s)	a(m/s/s)	g's	IMPACT ▲X	IMPACT ▲TIME
0	3.31	10.58	before impact	0.000	0.00000	0.63					
1	3.56	10.49		0.003	0.00284	0.68	17.61	6201	632.1		
2	3.86	10.50		0.006	0.00284	0.74	21.13	1239	126.3		
3	4.12	10.49	first definite impact sign	0.009	0.00284	0.79	17.61	-1239	-126.3	0.00	0.000
4	4.41	10.49		0.011	0.00284	0.84	17.61	0	0.0	0.05	0.002
5	4.68	10.50		0.014	0.00284	0.89	17.61	0	0.0	0.10	0.005
6	4.96	10.50		0.017	0.00284	0.95	21.13	1239	126.3	0.16	0.008
7	5.24	10.50		0.020	0.00284	1.00	17.61	-1239	-126.3	0.21	0.011
8	5.50	10.50		0.023	0.00284	1.05	17.61	0	0.0	0.26	0.014
9	5.76	10.48		0.026	0.00284	1.10	17.61	0	0.0	0.31	0.017
10	6.03	10.48		0.028	0.00284	1.15	17.61	0	0.0	0.36	0.019
15	7.31	10.50		0.043	0.01420	1.40	17.61	0	0.0	0.61	0.034
20	8.48	10.49		0.057	0.01420	1.62	15.49	-149	-15.2	0.83	0.048
25	9.57	10.48		0.071	0.01420	1.83	14.79	-49	-5.0	1.04	0.062
26	9.76	10.46		0.074	0.00284	1.87	14.08	-250	-25.5	1.08	0.065
27	9.99	10.46		0.077	0.00284	1.91	14.08	0	0.0	1.12	0.068
28	10.18	10.44		0.080	0.00284	1.95	14.08	0	0.0	1.16	0.071
29	10.39	10.47		0.082	0.00284	1.99	14.08	0	0.0	1.20	0.073
30	10.56	10.46		0.085	0.00284	2.02	10.56	-1239	-126.3	1.23	0.076
31	10.72	10.47		0.088	0.00284	2.05	10.56	0	0.0	1.26	0.079
32	10.81	10.47		0.091	0.00284	2.07	7.04	-1239	-126.3	1.28	0.082
33	10.96	10.48		0.094	0.00284	2.10	10.56	1239	126.3	1.31	0.085
34	11.04	10.47	approx. point collapse	0.097	0.00284	2.11	3.52	-2479	-252.7	1.32	0.088
35	11.11	10.48	block starts rise	0.099	0.00284	2.12	3.52	0	0.0		
36	11.16	10.47		0.102	0.00284	2.13	3.52	0	0.0		
37	11.19	10.48		0.105	0.00284	2.14	3.52	0	0.0		
38	11.22	10.49		0.108	0.00284	2.15	3.52	0	0.0		
39	11.24	10.49		0.111	0.00284	2.15	0.00	-1239	-126.3		
40	11.25	10.49		0.114	0.00284	2.15	0.00	0	0.0		
41	11.26	10.48		0.116	0.00284	2.15	0.00	0	0.0		
42	11.26	10.48		0.119	0.00284	2.15	0.00	0	0.0		
43	11.20	10.49		0.122	0.00284	2.14	-3.52	-1239	-126.3		
44	11.20	10.48		0.125	0.00284	2.14	0.00	1239	126.3		
45	11.20	10.48		0.128	0.00284	2.14	0.00	0	0.0		
46	11.15	10.46		0.131	0.00284	2.13	-3.52	-1239	-126.3		
47	11.12	10.47		0.133	0.00284	2.13	0.00	1239	126.3		
48	11.07	10.48		0.136	0.00284	2.12	-3.52	-1239	-126.3		
49	11.04	10.45		0.139	0.00284	2.11	-3.52	0	0.0		
50	10.98	10.45		0.142	0.00284	2.10	-3.52	0	0.0		
55	10.59	10.45		0.156	0.01420	2.02	-5.63	-149	-15.1		
60	10.20	10.49		0.170	0.01420	1.95	-4.93	49	5.0		

Figure 6-5 ET-603 Film Analysis Data Sheet

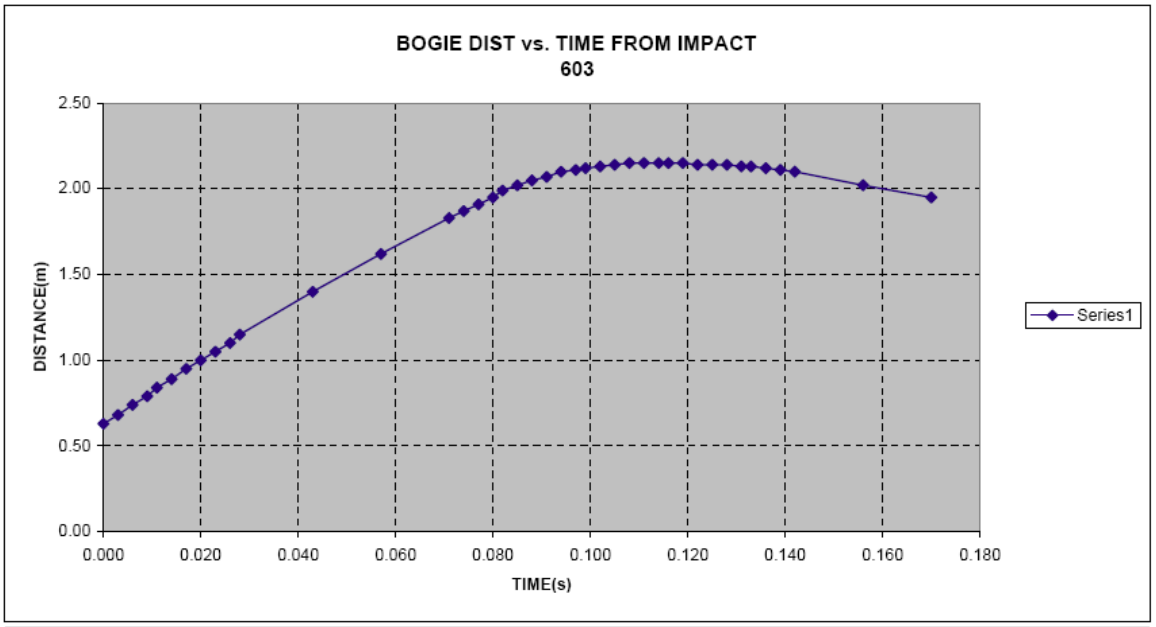

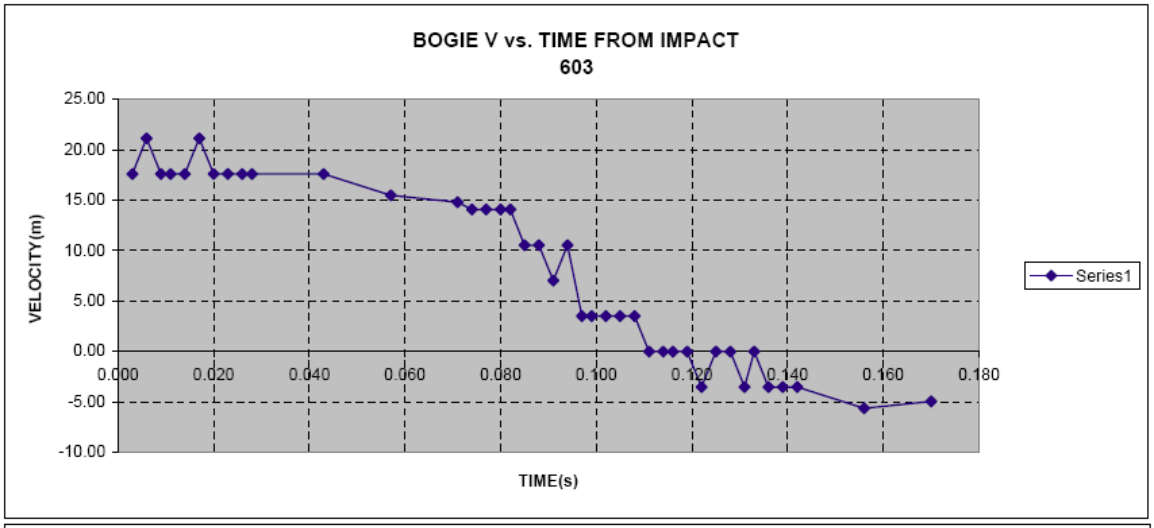

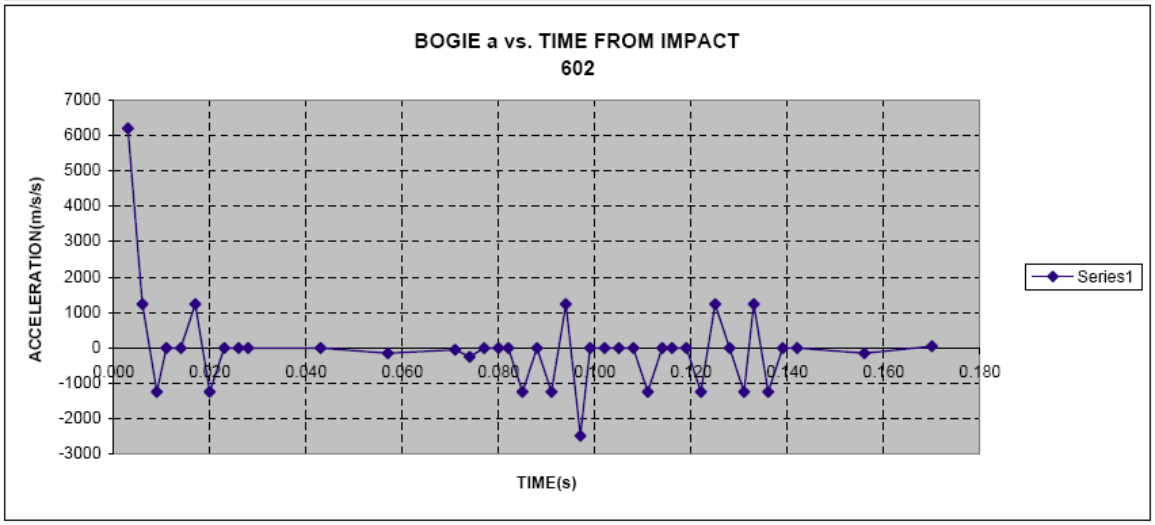

Figure 6-6 ET-603 Film Analysis Graphs

6.1.4. Quasi-Static Load Tests of Polyethylene Pipe

Tests QS102 through QS115 were conducted at the Caltrans Structural Materials Lab, 5900 Folsom Blvd., Sacramento, CA on May 13 and 18, 1998. They were parallel plate loading tests conducted on the Satec machine, serial number 60BTE—1037. These tests were part of the FHWA Regional Pooled Fund Study SPR-3(043), *Development of a New Guardrail End Treatment, Phase II.* They were conducted by Gary Gauthier, project manager of the research project, of the Caltrans Facilities Research Branch, Office of Research, New Technology and Research Program. See Tables Table 6-1 and Table 6-2 for details on the tests.

6.1.4.1. Purpose

The purpose of these tests was to compare the energy absorption capacity of medium density polyethylene (MDPE) PE2406 to that of high density polyethylene (HDPE) PE3408.

6.1.4.2. Test Articles

Samples of both types of pipe were donated by CSR Polypipe, PO Box 390, Gainesville, TX 76241-0390, contact Will Bezner, 940-665-1721 x223. Two SDR 11 series lengths of pipe with an 8” (203 mm) nominal diameter and each about 3 ft (914 mm) long were received (one PE3408, one PE2406). They were cut into test samples 4” (1219 mm) long at the Translab machine shop, using the large bandsaw. The PE2406 samples were numbered A1 through A7 and the PE3408 samples numbered from B1 through B7.

6.1.4.3. Load Tests

Tests QS102 through QS109 were conducted at a loading rate between 1 and 2 inches per minute (25 and 51 mm per minute) to develop load versus deflection curves. Loads were read from the machine and deflections read from a metric scale set up next to the top loading plate (see Figure 6-7). The loadings compressed the pipes laterally so that they were collapsed to a near flat state (see Figure 6-8). Most tests collapsed the pipes to a minor axis height of 55 mm (2.2”), although some went to 45 mm (1.8”). The minor axis height was actually the distance between the two load plates. The actual distance at the middle of the pipe from outside to outside would be less, since the shape of the pipe is in a figure eight. It was determined that 55 mm (2.2”) was more reasonable since the loads really shot up after this. At that point the machine was essentially compressing the solid plastic walls against each other.

Tests QS110 through 113 were conducted at slow and fast rates to determine strain rate effects on energy absorption under these quasi-static conditions. Tests QS114 and 115 were cycled loadings to determine fatigue effects. QS114 went through 4 quick, consecutive loadings on PE2406 sample A2, which had been loaded once five days prior. QS115 on the PE3408 sample B2 was not completed due to the lab closing. Jack Carney at Vanderbilt showed that the PE3408 holds up well under repeated loadings, so this test was not necessary.

Figure 6-7 Sample and Tester

Figure 6-8 Sample at Near Flat State

6.1.4.4. Test Results

At 70°F the average energy absorbed in tests QS102, QS104, QS106 and QS108 was 2096 kN-mm (1546 ft-lbs) for the PE2406. At 70°F the average energy absorbed in tests QS103, QS105, QS107 and QS109 was 2541 kN-mm (1874 ft-lbs) for the PE3408. Hence, the PE2406 pipe has about 82% of the energy absorption capacity of the PE3408 pipe. Forty-eight hours after collapse, both types of pipe averaged 88% restoration of the original diameter. After five days the pipe dimensions were essentially the same as after 48 hours.

At 76°F in test QS112 the PE2406 pipe absorbed 12% more energy at a load rate of 91 mm per min (3.6 inches per min) as opposed to a load rate of 14 mm per min (0.6 inches per min) in QS110. At 76°F in test QS113 the PE3408 pipe absorbed 14% more energy at a load rate of 78 mm per min (3.1 inches per min) as opposed to a load rate of 14 mm per min (0.6 inches per min) in QS111.

The cycled load tests on the PE2406 pipe did not cause any tearing, fracture or serious distress in the samples. After 48 hours from the fifth collapse on the same sample, the minor axis length was 82% of the original (outside diameter and never been loaded). This measurement was taken 7 days from the first loading.

6.1.4.5. Recommendations

Although the energy absorption capacity of the PE2406 pipe is 18% less than that of the PE3408, there are no obvious physical attributes that would preclude the pipe from being an effective energy absorbing element in a crash cushion. Other than this apparent lower stiffness under quasi-static loading, the two types of pipe seem very similar. In the research conducted at Vanderbilt U. by Carney, the energy absorbing capacity of PE3408 under impact loadings was higher than under quasi-static. It is probable that this will be true of the PE2406, and perhaps the difference from the PE3408 may be less. I recommend proceeding with dynamic testing of the PE2406 pipe in 20” (508 mm) diameter by 24” (610 mm) high sections.

Gary P. Gauthier
Associate Materials & Research Engineer

Table 6-1 Loading Tests Data Summary for Tests QS102 - QS109

POLYETHYLENE PIPE PARALLEL PLATE LOADING TESTS DATA SUMMARY

Test Number	QS102	QS103	QS104	QS105	QS106	QS107	QS108	QS109	2406 AVG.	3408 AVG.
Date	5/13/1998	5/13/1998	5/13/1998	5/13/1998	5/13/1998	5/13/1998	5/13/1998	5/13/1998		
Sample	A2	B2	A3	B3	A4	B4	A5	B5		
P.E. Type	2406	3408	2406	3408	2406	3408	2406	3408		
Nominal OD/SDR	8"SDR11	8"SDR11	8"SDR11	8"SDR11	8"SDR11	8"SDR11	8"SDR11	8"SDR11		
Length (in)	4"	4"	4"	4"	4"	4"	4"	4"		
Thickness (in)	0.83"	0.83"	0.83"	0.83"	0.83"	0.83"	0.83"	0.83"		
Times Collapsed Previously	0	0	0	0	0	0	0	0		
Amb. Temp.(F)	70	70	70	70	70	70	70	70		
Pipe Temp. (F)	70	70	70	70	70	70	70	70		
Minor Axis at Start (mm)	221	213	221	212	220	212	220	212		
Start Time at Loading(24hr)	1402	1421	1433	1444	1503	1513	1522	1531		
Elapsed Time End Last Test	NA	NA	NA	NA	NA	NA	NA	NA		
Max Load at Full Collapse (lbs.)	33,460	11,260	8960	11,320	9600	11,910	9780	12,040		
Loaded Minor Axis @ Collapse	45	55	55	55	55	55	55	55		
End Time at Load Release	1408	1426	1438	1449	1509	1518	1527	1535		
Minor Axis at Load Release	?	110	118	105	110	105	120	103		
Minor Axis @48h from Release	193	187	197	185	194	186	196	185	195	186
Minor Axis @ 5 days	195	188	198	187	195	187	197	186		
Stroke (mm)	176	158	166	157	165	157	165	157		
Load Time @Collapse (min)	5.667	?	4.833	4.433	4.367	4.067	4.200	3.983		
Actual Avg.Test Speed (in/min)	1.22	?	1.35	1.39	1.49	1.52	1.55	1.55		
Energy to 55mm MA (kN-mm)	2103	2495	2016	2489	2119	2618	2146	2560	2096	2541
* All loading is in the direction of the minor axis. Minor axis (MA) is O.D. for loaded pipes.										

Table 6-2 Loading Tests Data Summary for Tests QS110 – QS115

POLYETHYLENE PIPE PARALLEL PLATE LOADING TESTS DATA SUMMARY

Test Number	QS110	QS111	QS112	QS113	QS114a	QS114b	QS114c	QS114d	QS115a	QS115b
Date	5/18/1998	5/18/1998	5/18/1998	5/18/1998	5/18/1998	5/18/1998	5/18/1998	5/18/1998	5/18/1998	5/18/1998
Sample	A6	B6	A7	B7	A2	A2	A2	A2	B2	B2
P.E. Type	2406	3408	2406	3408	2406	2406	2406	2406	3408	3408
Nominal OD/SDR	8"/11	8"/11	8"/11	8"/11	8"/11	8"/11	8"/11	8"/11	8"/11	8"/11
Length (in)	4"	4"	4"	4"	4"	4"	4"	4"	4"	4"
Thickness (in)	0.83	0.83	0.83	0.83	0.83	0.83	0.83	0.83	0.83	0.83
Times Collapsed Previously	0	0	0	0	1	2	3	4	1	2
Amb. Temp.(F)	75	76	77	77	76	76	76	76	77	77
Pipe Temp. (F)	76	75	76	75	77	77	77	77	76	76
Minor Axis at Start (mm)	220	212	222	212	195	138	130	125	185	135
Start Time at Loading(24hr)	1452	1515	1538	1546	1612	1616	approx. 1620	approx. 1625	1633	?
Elapsed Time End Last Test	N/A	N/A	N/A	N/A	5days 2hrs	4m 6s	?	?	5days 2hrs	?
Max Load at Full Collapse (lbs.)	8,450	13,800	9170	11,530	8270	6690	6,430	6,550	10040	9010
Loaded Minor Axis @ Collapse	55	45	55	45	55	55	55	55	55	55
End Time at Load Release	1504	1528	1540	1549	cycled loading	cycled loading	cycled loading	1624	cycled loading	?
Minor Axis at Load Release	125	110	150	115	N/A	N/A	N/A	130	N/A	?
Minor Axis @48h from Release	194	179	196	178	N/A	N/A	N/A	181	INCOMPLETE	
Minor Axis @ 5 days										
Stroke (mm)	165	167	167	167	140	83	75	70	130	80
Load Time @Collapse (min)	11.500	12.000	1.833	2.133						
Actual Avg.Test Speed (in/min)	0.56	0.55	3.59	3.08						
Energy to 55mm MA (kN-mm)	1868	2241	2087	2562						

* All loading is in the direction of the minor axis. Minor axis (MA) is O.D. for loaded pipes.

6.1.5. Foam Module Tests Summary

Tests QS203 - 209 were conducted at the private testing lab, FTI / ANAMET in Hayward, CA on March, 30, 2001. These tests were part of the FHWA Regional Pooled Fund Study SPR-3(043), *Development of a New Guardrail End Treatment, Phase II.* They were supervised by project manager Gary Gauthier, of the Caltrans Office of Infrastructure Research, Division of New Technology and Research. Each test has a data sheet with detailed information recorded at the time of the test, along with a sheet showing the force versus deflection graph and amount of energy absorbed, see Section 6.1.5.6.

6.1.5.1. Purpose

The purpose of these tests were to determine the energy absorption capacity of foam crash cushion modules under quasi-static loading, compressed to 33% of its original depth, i.e. from 30” (762 mm) to 10” (254 mm). This is an initial step to determine the feasibility of dynamic testing.

6.1.5.2. Test Specimens

Two crash cushion modules were custom fabricated by the marine fender company Promar in April 1999. Each test specimen module measured 24” (610 mm) in width, 36” (914 mm) in height, and 30” (762 mm) in impact depth. They could be used in a full-scale crash cushion; however the original intention was that they would be half-depth samples of modules with a 60” (1524 mm) impact depth. The basic materials used in the fabrication are the same used in Promar’s cylindrical marine fenders they sell in various sizes. The interior of each module is composed of laminated layers of closed-cell polyethylene foam. Each module contains a different density foam: 3 pcf (pounds per cubic foot) (Sentinel brand MC-2900) and 4 pcf (Sentinel brand MC-3800). The foam blocks are protected with a 0.25” (6.35 mm) thick Nylon-reinforced polyurethane skin.

6.1.5.3. Test Setup

The testing was simple compression of the samples between parallel steel plates, using a Riehle Universal machine with a 120-kip (534 kN) capacity. The 24” (610 mm) by 36” (914 mm) sides were loaded uniformly with a normal force, compressing the 30” (762 mm) dimension (see Figure 6-9). A loading rate of approximately 2 inches per minute (51 mm per minute) was applied. Loads were read from the machine and deflections read from a vertical scale set up next to the top loading plate. The top loading plates weighed 600 lbs (2669 N) and compressed the 4 pcf sample about 0.25” (6.35 mm) and the 3 pcf sample about 0.5” (12.7 mm). This load was included in the data as an initial applied force. The weight of the bottom plates was zeroed out.

6.1.5.4. Test Results

6.1.5.4.1. Test QS 203

Sample Number CCM4-203-0499 (4 pcf)
Surface Temperature of Sample = 77˚F

This was the first loading for this sample. It was loaded to a maximum of 30 kips (133 kN) with 16.5” (419 mm) of deformation, for a total energy of 25.9 kip-ft (35.1 kN-m). The loading was stopped before reaching a deformation of 20” (508 mm) only because the range for the machine was set to max at 30 kips (133 kN). The capacity of the module was underestimated. The module compressed fairly uniformly, with the skin folding along multiple creases around all sides (see Figure 6-10). Immediately after unloading the module restored itself to about 90% of its original depth. There were no ruptures, tears, or any other distress noticed on the module surface, other than crease lines and a ”wavy” surface where the skin folded. Because the machine unloaded rather slowly, it could not be determined how quickly the module could rebound unrestrained.

6.1.5.4.2. Test QS 204

Sample Number CCM4-203-0499 (4 pcf)
Surface Temperature of Sample = 78˚F
This was the second loading for this sample. This test started about 15 minutes after unloading from the first test, with the depth measured at 29” (737 mm), 1” (25 mm) less than the original depth. The set that the skin took from its folding probably limited full restoration of the foam inside (see Figure 6-11).

In this second test the sample was loaded to a maximum of 57 kips (254 kN) with 20.25” (514 mm) of deformation, for a total energy of 35.1 kip-ft (47.6 kN-m). Compressed depth was 9” (229 mm). Immediately after unloading the module restored itself to about 90% of its original depth. There were no ruptures, tears or any other distress noticed on the module surface, other than crease lines and a ”wavy” surface where the skin folded. All following tests exhibited similar results.

6.1.5.4.3. Test QS 205

Sample Number CCM4-203-0499 (4 pcf)
Surface Temperature of Sample = 78˚F
This was the third loading for this sample. This test started about 15 minutes after unloading from test QS 204, with the depth measured at 28.875” (733 mm). A maximum load of 55.5 kips (247 kN) was applied with 19.875” (505 mm) of deformation, for a total energy of 30.8 kip-ft (418 kN). Compressed depth was 9.25” (235 mm).

6.1.5.4.4. Test QS 206

Sample Number CCM3-202-0499 (3 pcf)
Surface Temperature of Sample = 79˚F
This was the third loading for this sample, 15 days after it was loaded twice at another facility. The depth measured just under 30” (762 mm), almost fully restored from the previous compressions. A maximum load of 40.7 kips (181 kN) was applied with 20.5” (521 mm) of deformation, for a total energy of 25.4 kip-ft (34.4 kN-m). Compressed depth was 9.375” (238 mm).

6.1.5.4.5. Test QS 207

Sample Number CCM3-202-0499 (3 pcf)
Surface Temperature of Sample = 80˚F
This was the fourth loading for this sample, 16 minutes after unloading from test QS 206, with the depth measured at 29" (737 mm). A maximum load of 39.3 kips (175 kN) was applied with 19.5" (495 mm) of deformation, for a total energy of 21.7 kip-ft (29.4 kN-m). Compressed depth was 9.5" (241 mm).

6.1.5.4.6. Test QS 208

Sample Number CCM3-202-0499 (3 pcf)
Surface Temperature of Sample = 80˚F
This was the fifth loading for this sample, 19 minutes after unloading from test QS 207, with the depth measured at 28.75" (730 mm). A maximum load of 39.4 kips (175 kN) was applied with 19.38" (492 mm) of deformation, for a total energy of 21.1 kip-ft (28.6 kN-m). Compressed depth was 9.4" (239 mm).

6.1.5.4.7. Test QS 209

Sample Number CCM4-203-0499 (4 pcf)
Surface Temperature of Sample = 79˚F
This was the fourth loading for this sample. This test started about 2 hr 40 min after unloading from test QS 205, with the depth measured at 29.325" (745 mm). A maximum load of 53.8 kips (239 kN) was applied with 20.25" (514 mm) of deformation, for a total energy of 31.1 kip-ft (42.2 kN-m). Compressed depth was 9.25" (235 mm).

After multiple tests neither sample exhibited ruptures, tears or any other distress on the surface. The impact depths of both samples were measured at 29.5" (749 mm) on April 25, 2001, 26 days after the tests. Apparently there is a permanent set of about 0.5" (12.7 mm) due to the permanent creasing and "waviness" in the skin.

6.1.5.5. Conclusions and Recommendations

These crash cushion modules exhibit significant energy absorption capacity, with an ability to maintain that capacity after multiple tests, and not undergo any significant material distress or degradation. Nearly full restoration of the impact dimension of the module can be achieved. In the tests where 67% of deformation was achieved, the energy capacity decreased from 10% to 15% between the first to 2nd loading, and then stabilized on the 3rd loading. This may be due to initial "loosening up" of the material, particularly in the skin. Further testing would be required to fully verify stable energy capacities at similar loads and deformations.

These tests were under quasi-static loads but dynamic loads need to be applied to fully investigate the properties of these modules. It is theorized that dynamic loads representative of vehicle impacts will be higher with the same deformations as the quasi-static tests. If this proves true, the results of these tests indicate the ability of these modules (as installed in a crash cushion) to attenuate vehicle impacts is quite feasible. It is recommended to proceed with

dynamic testing using a pendulum and the same samples. Other samples in a cylindrical shape may be manufactured and tested dynamically to compare and contrast shape properties and the effects of the skin in the block shape.

Gary P. Gauthier
Senior Transportation Engineer

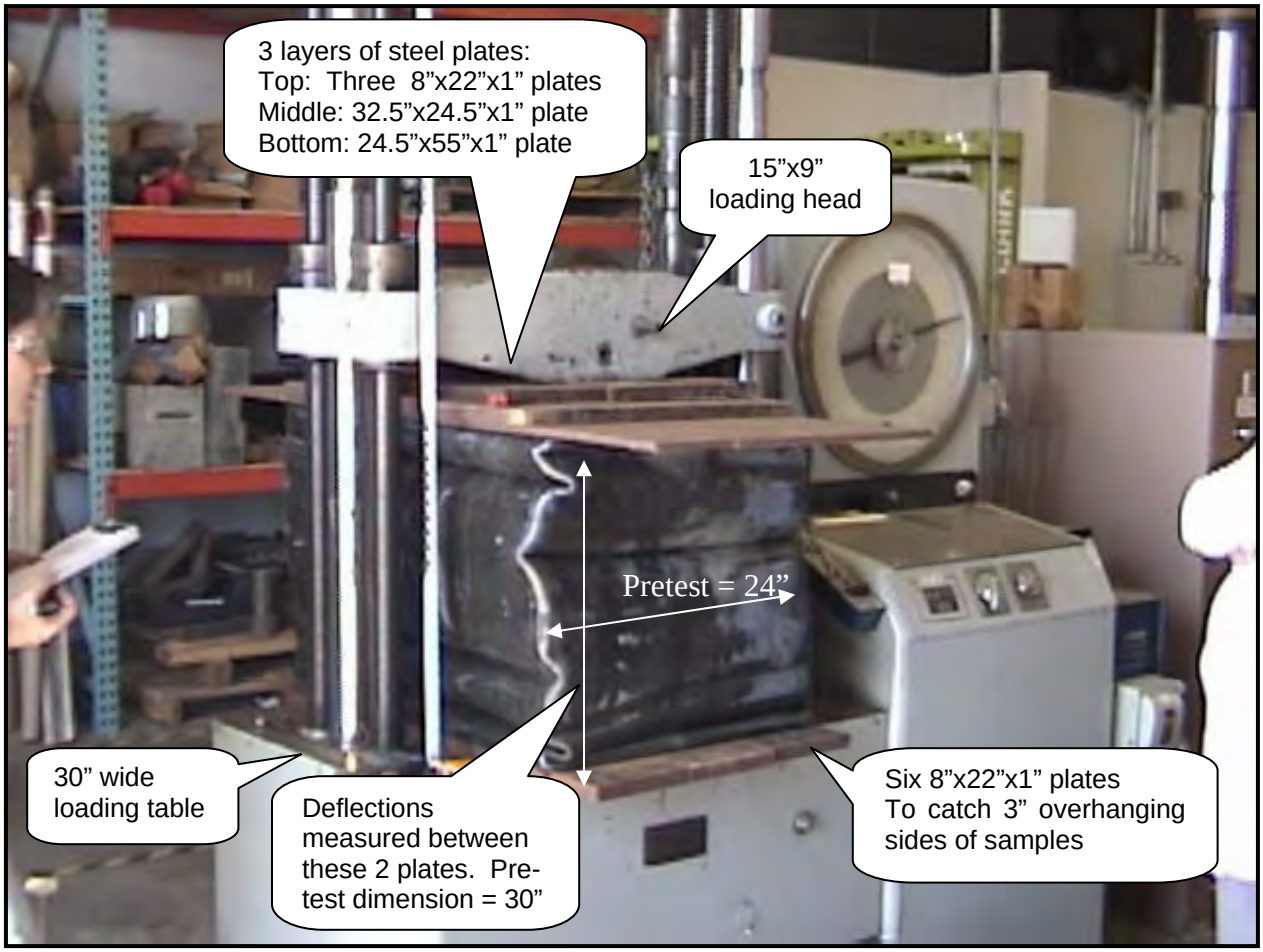

Figure 6-9 Test Setup

Figure 6-10 Fully Compressed Module, About 10” Deep

Figure 6-11 Test Sample 10 Minutes After Unloading 30” Dimension Now Almost 29”

6.1.5.6. Data Sheets and Force Versus Deformation Graphs

PRE-TEST DIMENSIONS

Press. area:	864	sq.in.
Height:	36	"
Width:	24	"
Impact depth:	30	"

CALTRANS TEST QS-203
QUASI-STATIC LOADING TESTS
PROMAR FOAM MODULE SAMPLE CCM4-203-0499
MC3800 FOAM (4 pcf)
with Polyurethane skin

PRESS. (psi)	LOAD (lbs)	DEFLECT. (in)
	0	0.00
0.7	600	0.25
2.5	2150	0.50
11.1	9600	1.25
19.7	17050	3.25
21.5	18600	5.25
20.3	17550	7.25
21.8	18850	9.25
24.4	21050	11.25
27.1	23450	13.25
31.7	27350	15.25
34.7	30000	16.50

ENERGY (kN-mm):	35121
ENERGY (kip-ft):	25.9

AREA (trap. avg.)	DEFLECT. (mm)	LOAD (kN)	ENERGY (kN-mm)
	0	0.0	
8.5	6	2.7	8.5
39	13	9.6	47
498	32	42.7	545
3012	83	75.9	3558
4030	133	82.8	7587
4086	184	78.1	11673
4114	235	83.9	15787
4510	286	93.7	20297
5030	337	104.4	25327
5742	387	121.7	31069
4051	419	133.5	35121

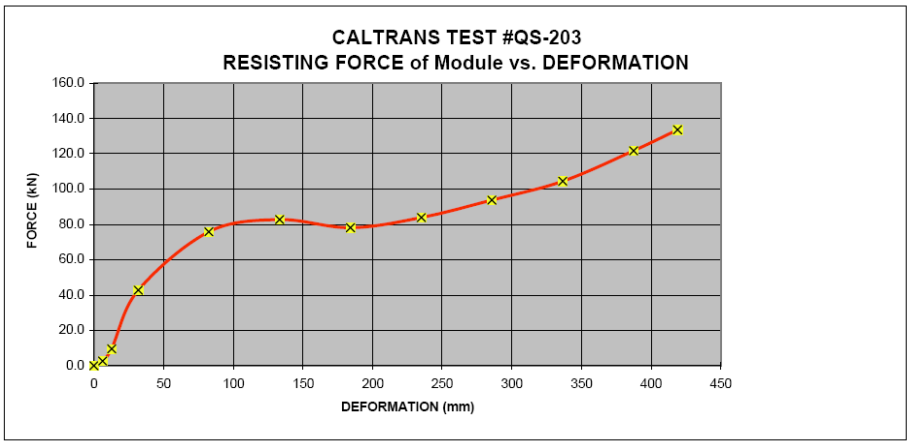

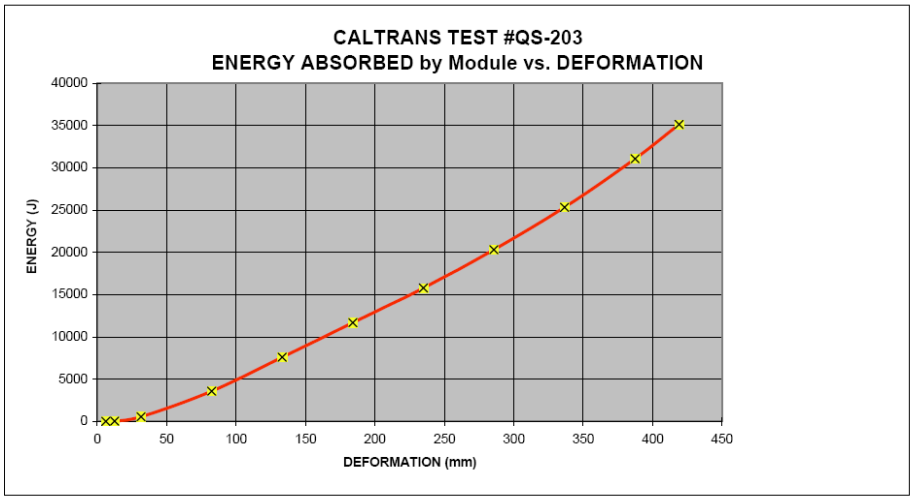

Figure 6-12 Test No. QS-203 Data Sheet and Graphs

PRE-TEST DIMENSIONS

Press. area:	864	sq.in.
Height:	36	"
Width:	24	"
Impact depth:	30	"

CALTRANS TEST QS-204
QUASI-STATIC LOADING TESTS
PROMAR FOAM MODULE SAMPLE CCM4-203-0499
MC3800 FOAM (4 pcf)
with Polyurethane skin

PRESS. (psi)	LOAD (lbs)	DEFLECT. (in)
	0	0.00
0.7	600	0.25
8.5	7350	1.25
11.9	10300	3.25
13.2	11400	5.25
14.8	12750	7.25
17.3	14950	9.25
20.9	18100	11.25
25.8	22250	13.25
32.8	28300	15.25
42.4	36600	17.25
55.4	47900	19.25
66.0	57000	20.25

ENERGY (kN-mm):	47591
ENERGY (kip-ft):	35.1

AREA (trap. avg.)	DEFLECT. (mm)	LOAD (kN)	ENERGY QS204 / CCM4 (kN-mm)	(kJ)
	0	0.0		
8.5	6	2.7	8.5	0.01
449	32	32.7	458	0.46
1995	83	45.8	2453	2.45
2453	133	50.7	4906	4.91
2730	184	56.7	7635	7.64
3131	235	66.5	10766	10.77
3736	286	80.5	14502	14.50
4561	337	99.0	19063	19.06
5714	387	125.9	24776	24.78
7336	438	162.9	32112	32.11
9551	489	213.2	41663	41.66
5928	514	253.7	47591	47.59

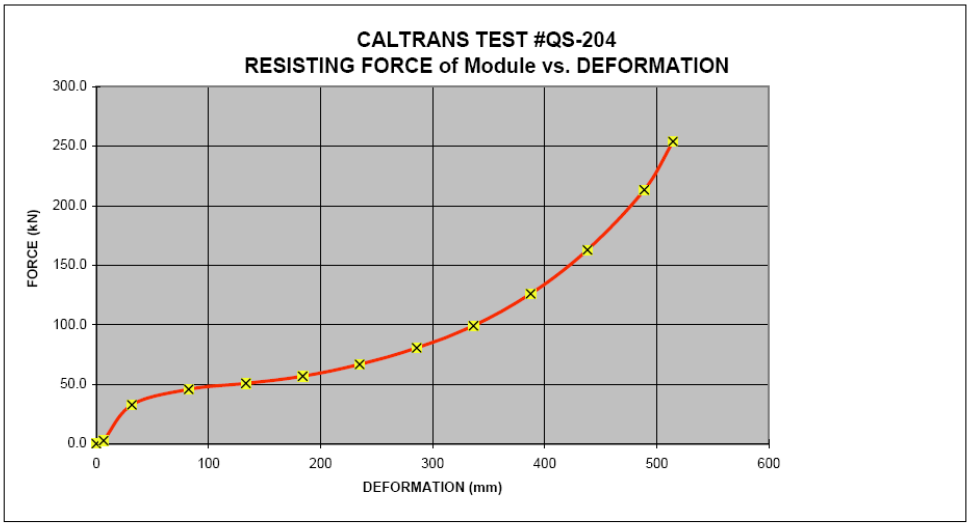

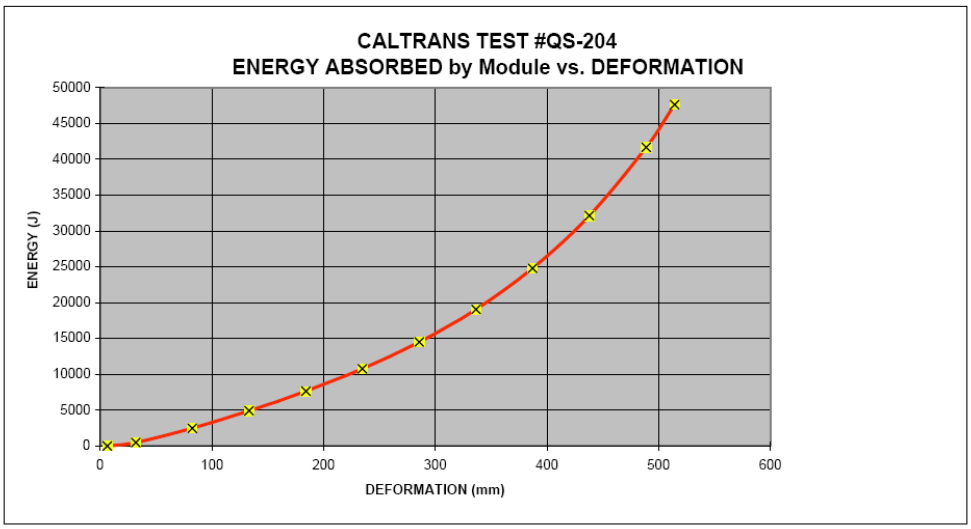

Figure 6-13 Test No. QS-204 Data Sheet and Graphs

PRE-TEST DIMENSIONS

Press. area:	864	sq.in.
Height:	36	"
Width:	24	"
Impact depth:	30	"

CALTRANS TEST QS-205
QUASI-STATIC LOADING TESTS
PROMAR FOAM MODULE SAMPLE CCM4-203-0499
MC3800 FOAM (4 pcf)
with Polyurethane skin

PRESS. (psi)	LOAD (lbs)	DEFLECT. (in)
	0	0.00
0.7	600	0.25
4.7	4100	0.88
9.4	8100	2.88
11.0	9500	4.88
12.7	10950	6.88
15.0	13000	8.88
18.1	15600	10.88
22.5	19400	12.88
28.5	24600	14.88
37.8	32700	16.88
52.8	45600	18.88
64.2	55500	19.88

ENERGY (kN-mm):	41764
ENERGY (kip-ft):	30.8

AREA (trap. avg.)	DEFLECT. (mm)	LOAD (kN)	ENERGY QS205 / CCM4 (kN-mm)	(kJ)
	0	0.0		
8.5	6	2.7	8.5	0.01
166	22	18.2	174	0.17
1379	73	36.0	1553	1.55
1989	124	42.3	3543	3.54
2311	175	48.7	5854	5.85
2707	225	57.9	8561	8.56
3233	276	69.4	11794	11.79
3956	327	86.3	15750	15.75
4973	378	109.5	20723	20.72
6477	429	145.5	27200	27.20
8850	479	202.9	36050	36.05
5714	505	247.0	41764	41.76

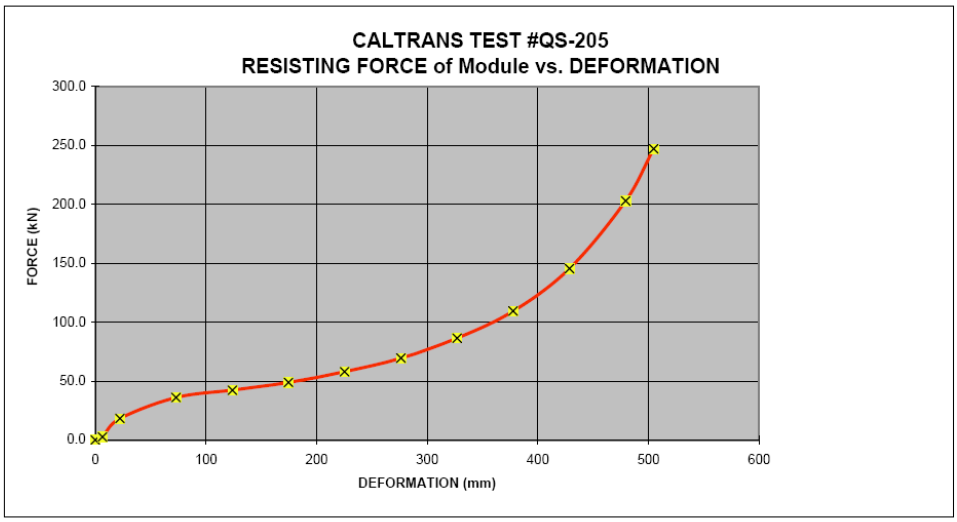

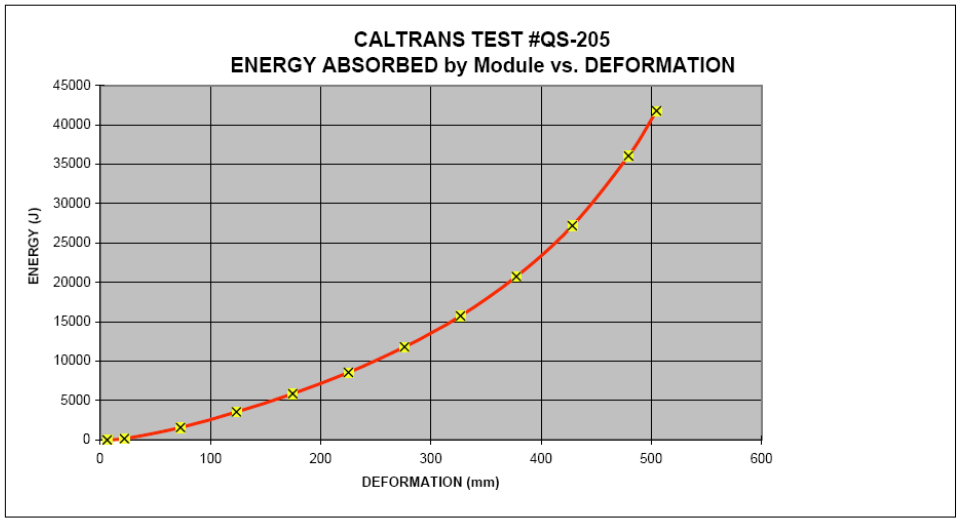

Figure 6-14 Test No. QS-205 Data Sheet and Graphs

PRE-TEST DIMENSIONS

Press. area:	864	sq.in.
Height:	36	"
Width:	24	"
Impact depth:	30	"

CALTRANS TEST QS-206
QUASI-STATIC LOADING TESTS
PROMAR FOAM MODULE SAMPLE CCM3-202-0499
MC2900 FOAM (3 pcf)
with Polyurethane skin

PRESS. (psi)	LOAD (lbs)	DEFLECT. (in)
	0	0.00
0.7	600	0.50
5.5	4750	1.50
9.4	8100	3.50
10.1	8700	5.50
11.1	9550	7.50
12.0	10400	9.50
15.4	13300	11.50
18.8	16200	13.50
23.5	20300	15.50
30.1	26000	17.50
40.2	34700	19.50
47.1	40700	20.50

ENERGY (kN-mm):	34483
ENERGY (kip-ft):	25.4

AREA (trap. avg.)	DEFLECT. (mm)	LOAD (kN)	ENERGY QS206 / CCM3 (kN-mm)	(kJ)
	0	0.0		
17.0	13	2.7	17.0	0.02
302	38	21.1	319	0.32
1452	89	36.0	1772	1.77
1899	140	38.7	3671	3.67
2063	191	42.5	5733	5.73
2255	241	46.3	7988	7.99
2679	292	59.2	10667	10.67
3334	343	72.1	14002	14.00
4126	394	90.3	18127	18.13
5233	445	115.7	23360	23.36
6861	495	154.4	30221	30.22
4261	521	181.1	34483	34.48

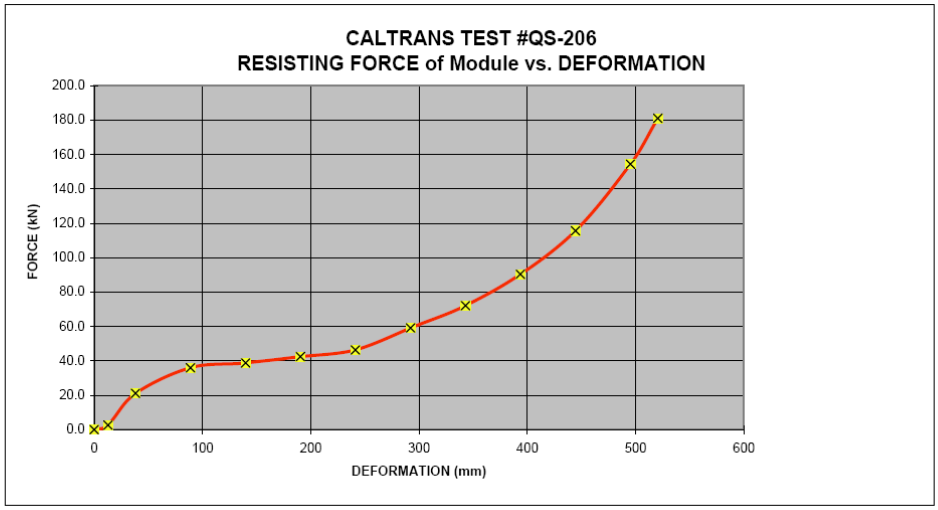

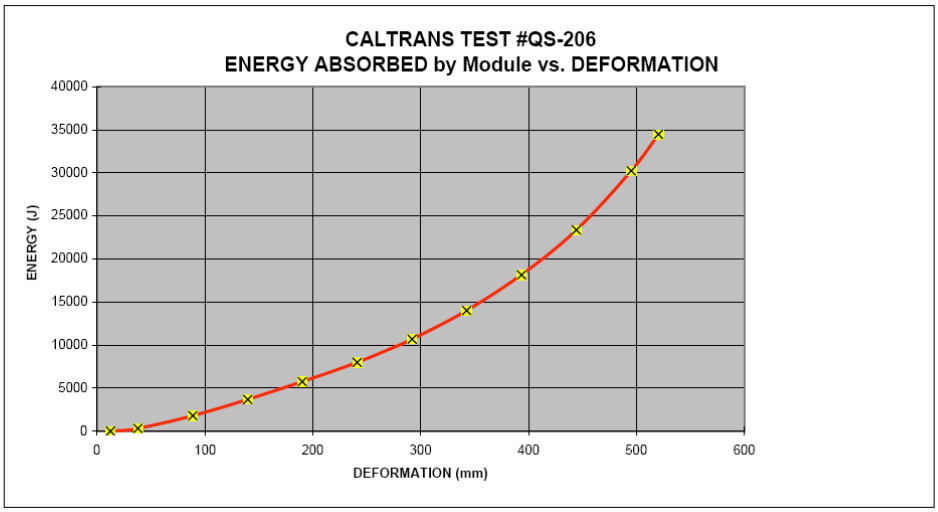

Figure 6-15 Test No. QS-206 Data Sheet and Graphs

PRE-TEST DIMENSIONS

Press. area:	864	sq.in.
Height:	36	"
Width:	24	"
Impact depth:	30	"

CALTRANS TEST QS-207
QUASI-STATIC LOADING TESTS
PROMAR FOAM MODULE SAMPLE CCM3-202-0499
MC2900 FOAM (3 pcf)
with Polyurethane skin

PRESS. (psi)	LOAD (lbs)	DEFLECT. (in)
	0	0.00
0.7	600	0.50
5.6	4800	2.50
7.2	6250	4.50
8.7	7500	6.50
10.5	9100	8.50
13.0	11200	10.50
16.4	14200	12.50
21.1	18250	14.50
27.7	23900	16.50
38.0	32800	18.50
45.5	39300	19.50

ENERGY (kN-mm):	29388
ENERGY (kip-ft):	21.7

AREA (trap. avg.)	DEFLECT. (mm)	LOAD (kN)	ENERGY QS207 / CCM3 (kN-mm)	(kJ)
	0	0.0		
17.0	13	2.7	17.0	0.02
610	64	21.4	627	0.63
1249	114	27.8	1876	1.88
1554	165	33.4	3430	3.43
1876	216	40.5	5307	5.31
2295	267	49.8	7601	7.60
2871	318	63.2	10472	10.47
3668	368	81.2	14140	14.14
4764	419	106.4	18904	18.90
6409	470	146.0	25313	25.31
4075	495	174.9	29388	29.39

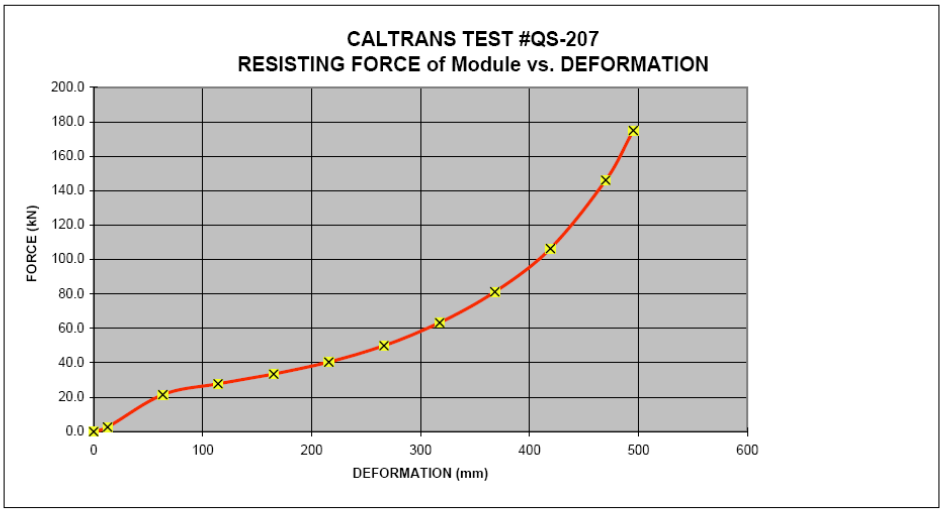

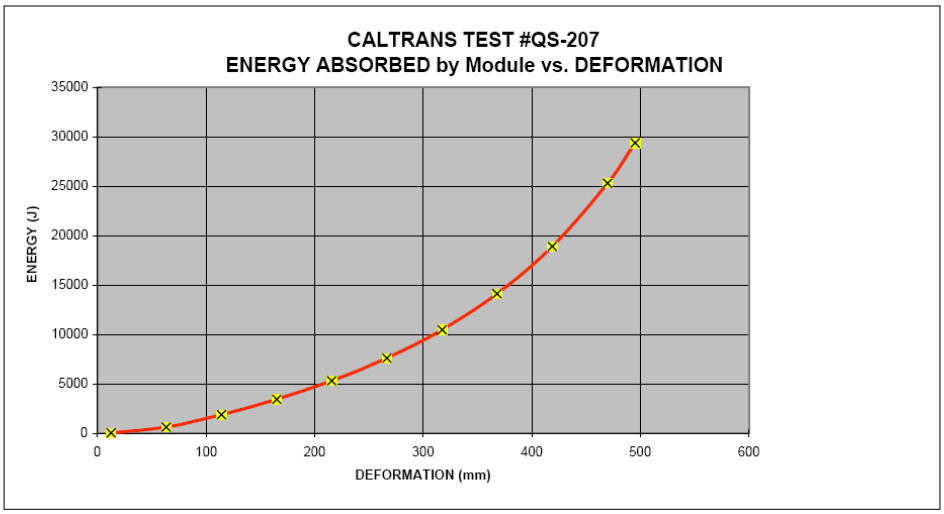

Figure 6-16 Test No. QS-207 Data Sheet and Graphs

PRE-TEST DIMENSIONS

Press. area:	864	sq.in.
Height:	36	"
Width:	24	"
Impact depth:	30	"

CALTRANS TEST QS-208
QUASI-STATIC LOADING TESTS
PROMAR FOAM MODULE SAMPLE CCM3-202-0499
MC2900 FOAM (3 pcf)
with Polyurethane skin

PRESS. (psi)	LOAD (lbs)	DEFLECT. (in)
	0	0.00
0.7	600	0.50
5.1	4400	2.38
6.8	5900	4.38
8.3	7200	6.38
10.1	8750	8.38
12.7	10950	10.38
16.0	13800	12.38
20.6	17800	14.38
27.2	23500	16.38
37.6	32500	18.38
45.6	39400	19.38

ENERGY (kN-mm):	28653
ENERGY (kip-ft):	21.1

AREA (trap. avg.)	DEFLECT. (mm)	LOAD (kN)	ENERGY QS208 / CCM3 (kN-mm)	(kJ)
	0	0.0		
17.0	13	2.7	17.0	0.02
531	60	19.6	548	0.55
1164	111	26.3	1712	1.71
1481	162	32.0	3193	3.19
1803	213	38.9	4996	5.00
2227	264	48.7	7223	7.22
2797	314	61.4	10020	10.02
3572	365	79.2	13592	13.59
4668	416	104.6	18260	18.26
6330	467	144.6	24590	24.59
4063	492	175.3	28653	28.65

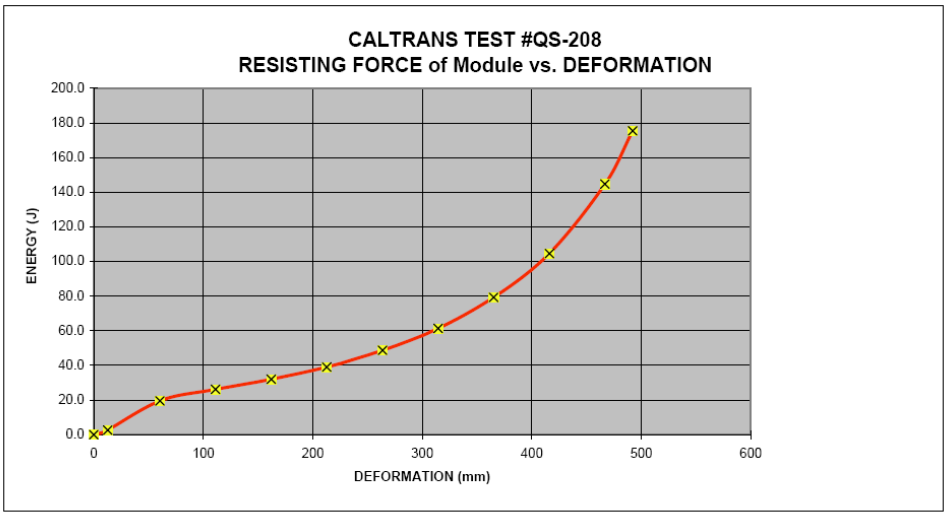

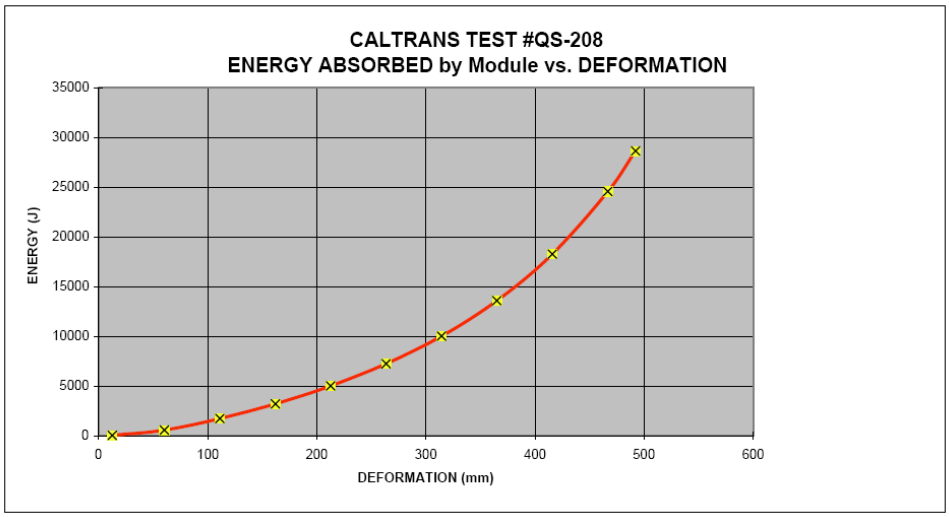

Figure 6-17 Test No. QS-208 Data Sheet and Graphs

PRE-TEST DIMENSIONS

Press. area:	864	sq.in.
Height:	36	"
Width:	24	"
Impact depth:	30	"

CALTRANS TEST QS-209
QUASI-STATIC LOADING TESTS
PROMAR FOAM MODULE SAMPLE CCM4-203-0499
MC3800 FOAM (4 pcf)
with Polyurethane skin

PRESS. (psi)	LOAD (lbs)	DEFLECT. (in)
	0	0.00
0.7	600	0.25
7.0	6050	1.25
10.5	9100	3.25
11.7	10150	5.25
13.3	11500	7.25
15.4	13300	9.25
18.2	15700	11.25
22.6	19500	13.25
28.1	24300	15.25
36.9	31900	17.25
51.2	44200	19.25
62.3	53800	20.25

ENERGY (kN-mm):	42222
ENERGY (kip-ft):	31.1

AREA (trap. avg.)	DEFLECT. (mm)	LOAD (kN)	ENERGY QS209 / CCM4 (kN-mm)	(kJ)
	0	0.0		
8.5	6	2.7	8.5	0.01
376	32	26.9	384	0.38
1712	83	40.5	2097	2.10
2176	133	45.2	4273	4.27
2447	184	51.2	6720	6.72
2803	235	59.2	9523	9.52
3278	286	69.9	12801	12.80
3979	337	86.8	16779	16.78
4951	387	108.1	21730	21.73
6352	438	142.0	28082	28.08
8602	489	196.7	36684	36.68
5538	514	239.4	42222	42.22

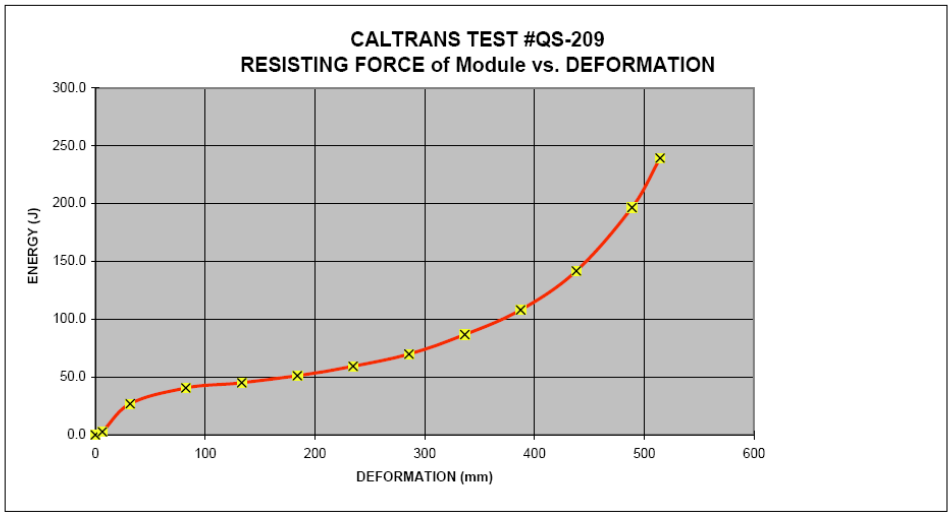

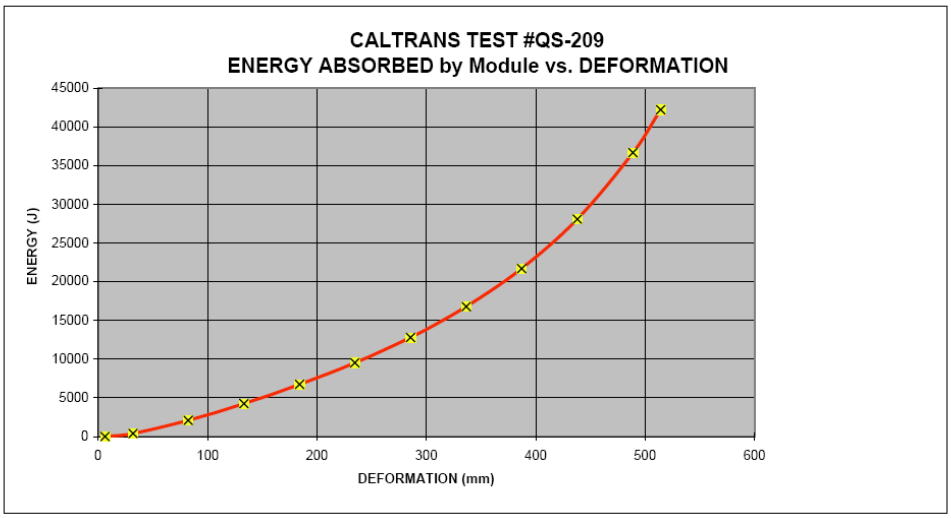

Figure 6-18 Test No. QS-209 Data Sheet and Graphs

PRE-TEST DIMENSIONS

Press. area:	864	sq.in.
Height:	36	"
Width:	24	"
Impact depth:	30	"

CALTRANS TESTS QS-203 to 209
QUASI-STATIC LOADING TESTS COMPARISON

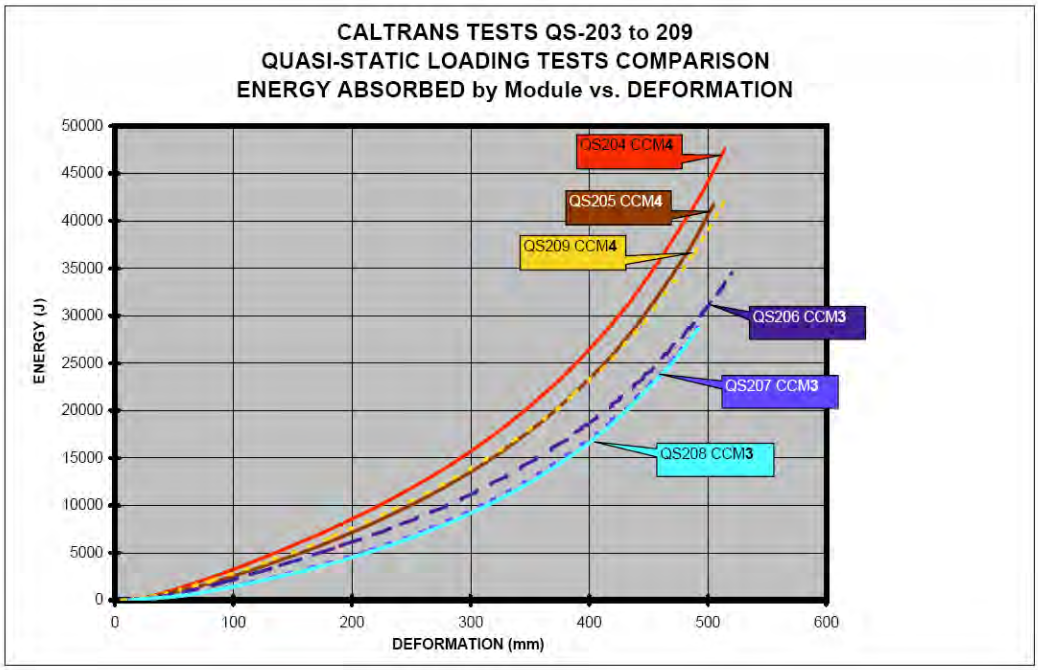

Figure 6-19 Tests QS-203 -209 Summary Graph

6.1.6. Dynamic Test Summary

6.1.6.1. Test Series # 247*

This summary documents pendulum impact tests conducted under contract with E-TECH Testing Services, Inc. by John LaTurner, at their test facility in Rocklin, CA on Jun 6, 2001. These tests are part of Phase I Dynamic Testing of the FHWA Regional Pooled Fund Study SPR-3(043), *Development of a New Guardrail End Treatment, Phase II.* Gary Gauthier is the project manager of the research project, who ordered these tests, analyzed the results and authored this summary.

6.1.6.2. Purpose

To determine the "Force versus Deformation" and "Energy versus Deformation" relationships under impact for two foam crash cushion modules. The target deformation of the modules for each test was a minimum of 67% of the original impact depth.

6.1.6.3. Test Specimens

Two crash cushion modules were tested, CCM-3 and CCM-4. They were custom fabricated by the marine fender company Promar in April 1999. Each test specimen module is 24" (610 mm) wide, 36" (914 mm) high, and 29.5" (749 mm) along the impact dimension. They could be used in a full-scale crash cushion; however the original intention was that they would be half-depth samples of modules with a 60" (1524 mm) impact depth. The basic materials used in the fabrication are the same used in Promar's cylindrical marine fenders they sell in various sizes. The interior of each module is a block of laminated closed-cell polyethylene foam. Each module contains a different density foam: 3 pcf (Sentinel brand MC-2900) for CCM-3 and 4 pcf (Sentinel brand MC-3800) for CCM-4. The foam blocks are protected with a 0.25" (6.35 mm) thick polyurethane skin.

These modules are the same specimens tested under quasi-static conditions in tests QS 203 to QS 209 in March, 2001.

6.1.6.4. Test Apparatus

E-tech's pendulum with variable swing mass was used to impact these modules. The mass varied from 499 kg (1100 lbs) to 915 kg (2017 lbs). The maximum drop height of the mass was 7.47 m (24.5 ft) with a speed of about 12 m/s (39.4 ft/s).

The test specimens or modules were positioned at the nadir of the swing mass, such that the impact plate of the mass impacted squarely and centrally over the front face of the module. The module rested unattached on 4 foam blocks, elevating it to the proper height above the concrete test pad. A section of concrete barrier with steel plates attached provided a nearly rigid reaction surface for the rear face of the module.

* This is an E-TECH test series designation.

Figure 6-20 Test Set-Up, With Swing Mass at Nadir of Trajectory

6.1.6.5. Data Acquisition

A single accelerometer positioned at the center of the swing mass measured accelerations digitally at a frequency of 4042 Hz. Prior to digital sampling a 300 Hz cutoff anti-alias analog filter was used.

An electronic speed trap was used to measure impact speeds. A light beam fixed on the mass was retro-reflected off two targets 1 m (39") apart, just prior to impact. The voltage peaks from the retro-reflections were measured over time to determine the speed.

A Data Brick acquisition system was used to collect the speed and acceleration data.

Two digital cameras were used to film the impact of the swing mass into the modules at speeds of approximately 1000 fps. One was located overhead and the other to the right side of the module, looking at the module from the swing mass.

6.1.6.6. Test Results

6.1.6.6.1. Test CCM3-1

Sample Number CCM3-202-0499 (3 pcf)
This was a trial test to determine how much mass would be required to compress the module to the minimum deformation. The impact mass was 499 kg (1100 lbs) and estimated speed was 12.1 m/s (39.7 ft/s). The data acquisition system failed to yield data for this test. From film analysis the estimated deformation was 57%. The initial impact depth of 749 mm (29.5") was restored to 749 mm (29.5") after impact. No damage in module detected.

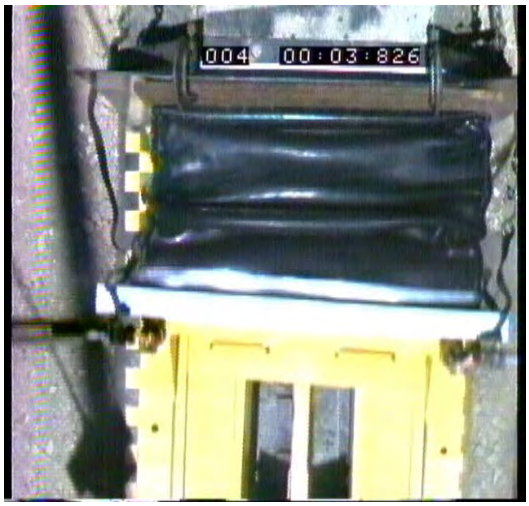

Figure 6-21 Typical Overhead Shot of Swing Mass Impact

6.1.6.6.2. Test CCM3-2

Sample Number CCM3-202-0499
The impact mass was 752 kg (1658 lbs) and speed was 11.7 m/s (38.4 ft/s). The reaction plate attached to the concrete barrier section appeared to move and deflect somewhat, indicating that a thicker plate was needed. The module was strapped to the reaction plate, but the strap released on the rebound. The module rebounded forward, rolling into the pendulum trajectory after impact. The corner of the impact plate of the swing mass contacted the rear side of the module as the module rebounded and the swing mass was still oscillating, rupturing the skin. This revealed a polyurethane skin thickness of about 5 mm (0.2") with no nylon reinforcing. The initial impact depth of 749 mm (29.5") was restored to 749 mm (29.5") after impact.

6.1.6.6.3. Test CCM3-3

Sample Number CCM3-202-0499
Ambient Temperature = 83° F
Sample Surface Temperature = 82° F
The impact mass was 752 kg (1658 lbs) and speed was 11.5 m/s (37.7 ft/s). A thicker plate was attached to the existing reaction plate; however some movement was still noticed. The problem appeared to be that the thinner plate was not attached to the concrete barrier tightly. This movement was probably not very significant with respect to amount of energy absorbed by the module. The accelerometer was damaged. The initial impact depth of 749 mm (29.5") was restored to 749 mm (29.5") after impact. No damage in module detected.

6.1.6.6.4. Test CCM4-1

Sample Number CCM4-203-0499 (4 pcf)
The impact mass was increased to 915 kg (2017 lbs) for this stiffer foam. The impact speed was 11.7 m/s (38.4 ft/s). The initial impact depth of 749 mm (29.5”) was restored to 749 mm (29.5”) after impact. No damage in module detected.

6.1.6.6.5. Test CCM4-2

Sample Number CCM4-203-0499 (4 pcf)
The impact mass was 915 kg (2017 lbs) and impact speed was 11.5 m/s (37.7 ft/s). The initial impact depth of 749 mm (29.5”) was restored to 749 mm (29.5”) after impact. No damage in module detected.

6.1.6.6.6. Test CCM4-3

Sample Number CCM4-203-0499
Ambient Temperature = 91° F
Sample Surface Temperature = 96° F
The impact mass was 915 kg (2017 lbs) and impact speed was 11.7 m/s (28.4 ft/s). The initial impact depth of 749 mm (29.5”) was restored to 749 mm (29.5”) after impact. No damage in module detected. The overhead camera was not installed for this test, to avoid risk of damage from oscillating swing mass.

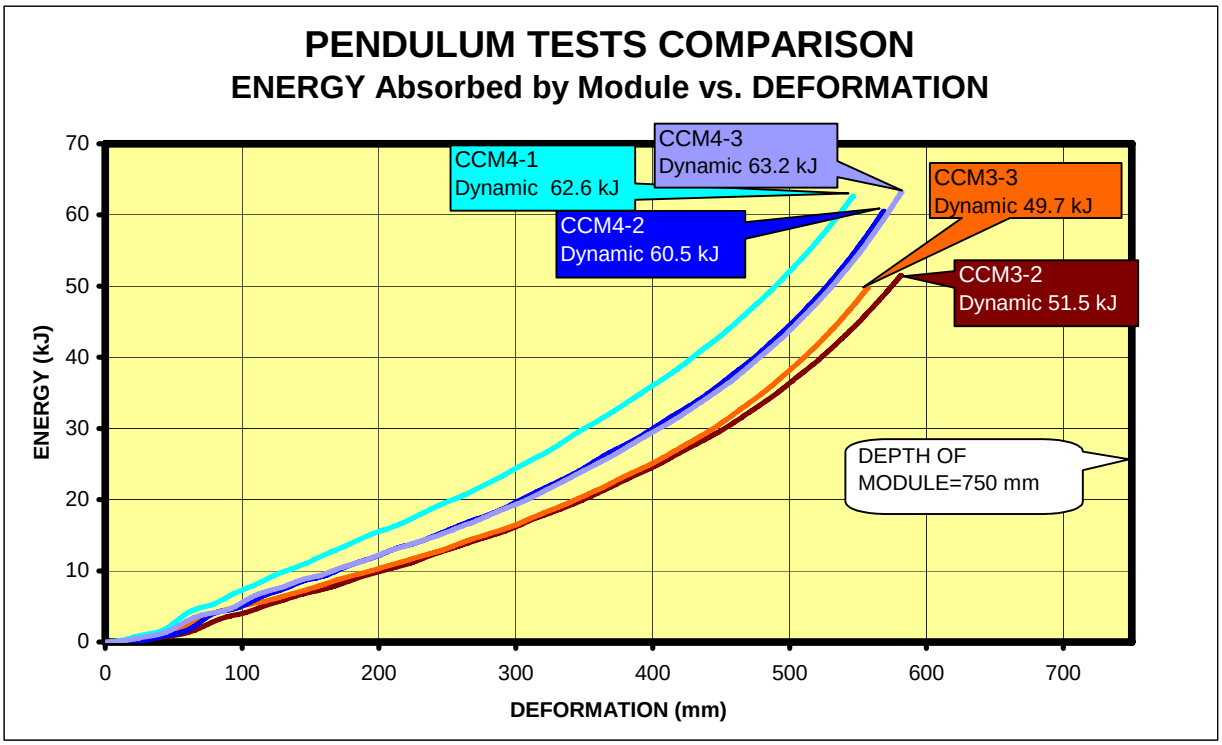

Figure 6-22 Pendulum Tests Comparison

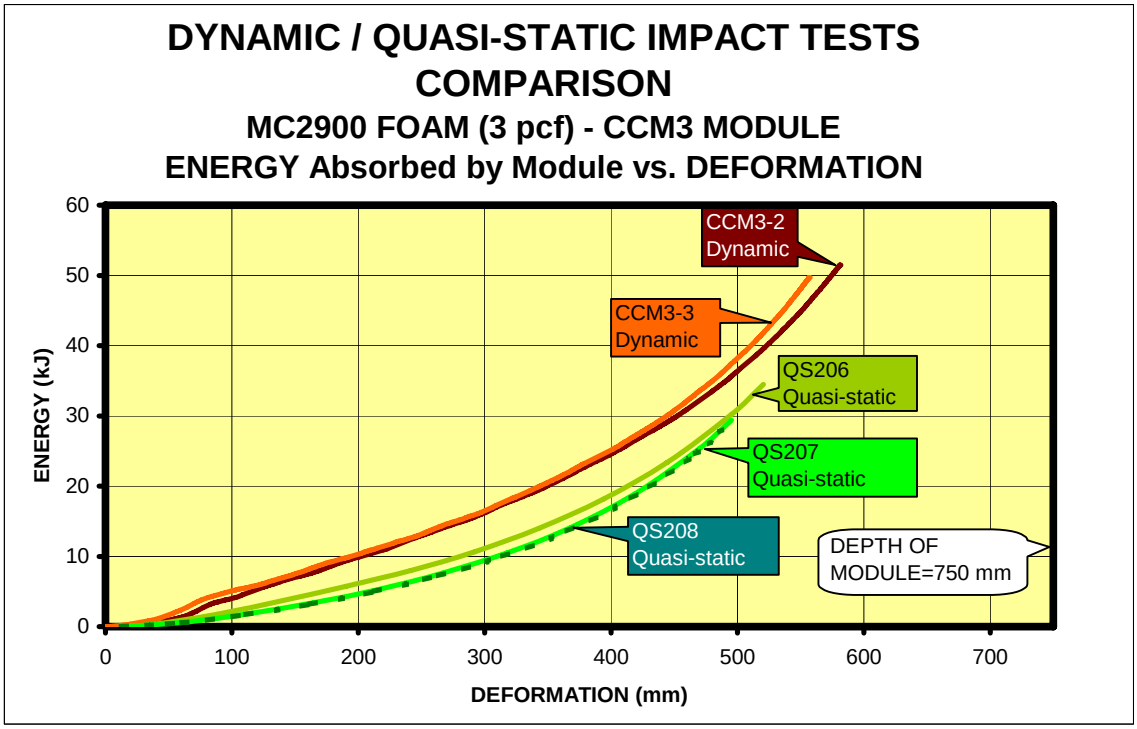

Figure 6-23 Dynamic/Quasi-Static Impact Tests Comparison

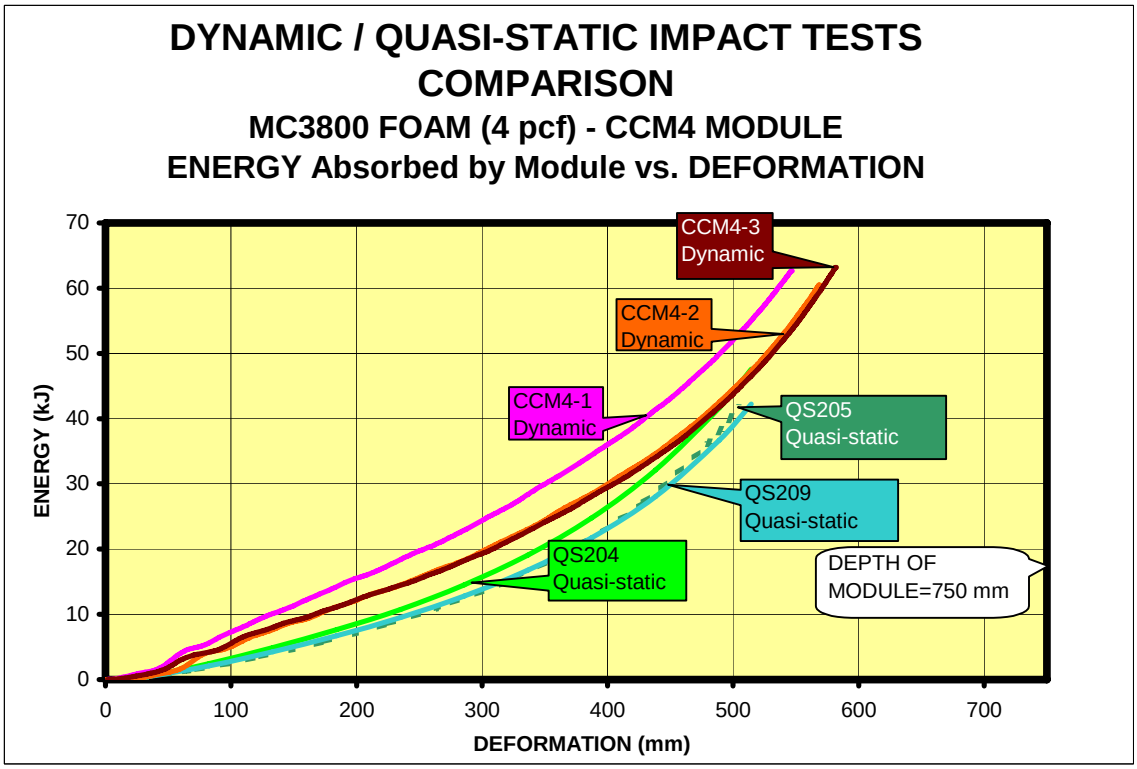

Figure 6-24 Dynamic/Quasi-Static Impact Tests Comparison

6.1.6.7. Test Comparisons

The CCM4 modules on average absorb about 23% more energy than the CCM3 modules, which was expected because of the difference in densities. The first CCM3 test was not charted, but the second and third dynamic tests show very close energy versus deformation relationships. The first CCM4 test is stiffer than the next 2, which are very close. This may be due to a "loosening up" of the material, particularly the skin, during the initial dynamic tests, which resulted in the less stiff relationship during the following two. Note, however, that both samples did receive multiple quasi-static loadings several months earlier. Repeated loadings would more clearly indicate whether there is a decrease in stiffness, or continued stability. The energy versus deformation curves are not linear, but only gradually increase in slope, even at strains around 0.75.

The CCM3 modules absorb about 23% more energy dynamically than quasi-statically at a strain of 0.67, which was the limit for the quasi-static tests.

If both the initial dynamic and quasi-static tests of the CCM4 module are ignored (since they are not that close with their following tests), the CCM4 module absorbs only about 10% more energy dynamically than quasi-statically at a strain of 0.67.

6.1.6.8. Conclusions and Recommendations

These impact attenuator modules exhibit significant energy absorption capacity, with an ability to maintain that capacity after multiple tests, and not undergo any significant material distress or degradation. The amount of energy absorbed in each module represents an appropriate fraction that would be required from a full-length attenuator of similar modules in stopping the 2000 kg (4409 lbs) pickup truck. The material behaved essentially elastically, with full, immediate restoration of the impact depth. This would present a problem with vehicle rebound, but other means can be developed to retard the restoration in an impact attenuator.

A disappointment was the rupture of the polyurethane skin under a very low impact force. After further investigation, it was discovered that only 4 sides of each module had skin reinforced with nylon. This was not what was specified to the manufacturer, who decided not to reinforce 2 sides. It so happens, the rupture occurred on one of the unreinforced sides. Nevertheless, it appears that even the reinforced skin would not be adequate in resisting a lateral impact force from a vehicle. The modules would have to be protected with fenders.

These tests were designed to be only preliminary in nature, to investigate the general feasibility of using these materials in an impact attenuator. More extensive material testing, including more impact tests, would be warranted before developing a prototype impact attenuator for full-scale crash tests.

Gary P. Gauthier
Senior Transportation Engineer
Caltrans Office of Infrastructure Research