Technical Report Documentation Page

1. REPORT No.
FHWA-CA-TL-79-03

2. GOVERNMENT ACCESSION No.

3. RECIPIENT'S CATALOG No.

4. TITLE AND SUBTITLE
Evaluation of Rock Bolts For Installation In Existing Concrete Structures

5. REPORT DATE
February 1979

6. PERFORMING ORGANIZATION

7. AUTHOR(S)
J.P. Dusel, Jr., D.H. Andersen, and J.R. Stoker

8. PERFORMING ORGANIZATION REPORT No.
19601-636736

9. PERFORMING ORGANIZATION NAME AND ADDRESS
Office of Transportation Laboratory
California Department of Transportation
Sacramento, California 95819

10. WORK UNIT No.

11. CONTRACT OR GRANT No.
D-4-134

12. SPONSORING AGENCY NAME AND ADDRESS
California Department of Transportation
Sacramento, California 95807

13. TYPE OF REPORT & PERIOD COVERED
Final Report

14. SPONSORING AGENCY CODE

15. SUPPLEMENTARY NOTES
This study was conducted in cooperation with the U.S. Department of Transportation, Federal Highway Administration for the project title, "Evaluation of Rock Bolts for Installation in Existing Concrete Structures".

16. ABSTRACT
The purpose of this study was to evaluate the effectiveness of short rock bolts installed in existing concrete at shallow embedment depths and subjected to direct tension loads. It is sometimes desirable to use such devices to mount signs and electroliers on existing bridges, where minimal clearance to edges of concrete and shallow embedment depths are problems commonly encountered. The pullout strengths of 1-inch-diameter hollow core rock bolts having expansion shell head assemblies were determined at four embedment depths (8 to 14 inches) and at small distances to edges of concrete blocks (from 4 to 10 inches). Various bonding materials were used to seal the rock bolts in cored holes and to provide additional pullout strength. Creep under sustained tensile loading was also evaluated. Threaded steel bars bonded in 24-inch-deep core-drilled holes were tested for maximum pullout strength and used as control specimens. Limited group tests of rock bolt pairs were also performed to provide information on the effect of spacing on bolt pullout strengths. The hollow core rock bolts tested in direct tension were found to be effective when installed at a minimum depth of 12 inches and with a minimum edge clearance of 6 inches.

17. KEYWORDS
Rock bolts, pullout tests, anchor bolts, creep, concrete embedments, expansion, anchorages

18. No. OF PAGES:
103

19. DRI WEBSITE LINK
http://www.dot.ca.gov/hq/research/researchreports/1978-1980/79-03.pdf

20. FILE NAME
79-03.pdf

This page was created to provide searchable keywords and abstract text for older scanned research reports.
November 2005, Division of Research and Innovation

REPORT NO. FHWA-CA-TL-79-03

EVALUATION OF ROCK BOLTS FOR INSTALLATION IN EXISTING CONCRETE STRUCTURES

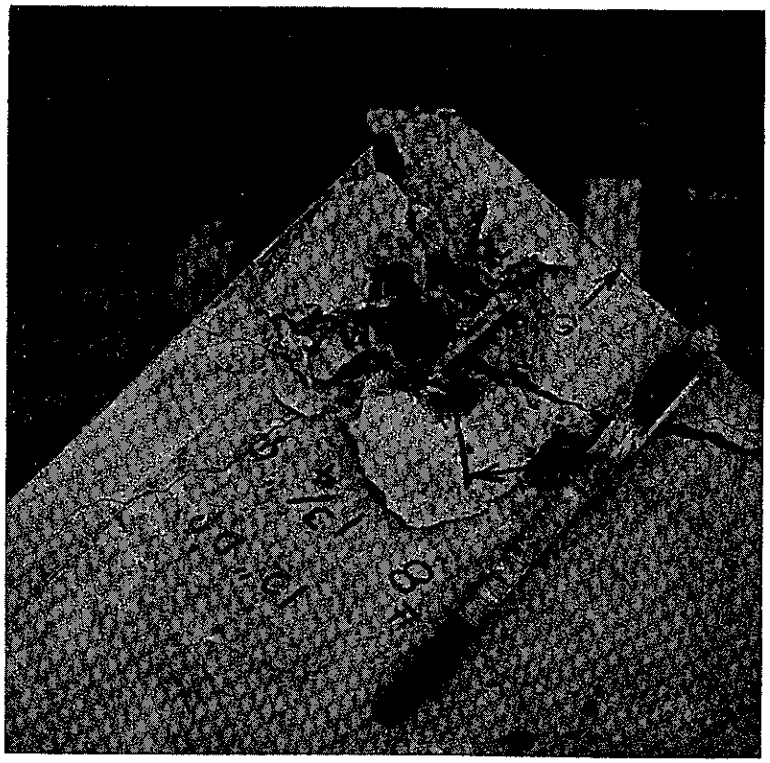

FINAL REPORT

FEBRUARY, 1979

Caltrans

CALIFORNIA DEPARTMENT OF TRANSPORTATION

ClibPDF - www.fastio.com

TECHNICAL REPORT STANDARD TITLE PAGE

1. REPORT NO.	2. GOVERNMENT ACCESSION NO.	3. RECIPIENT'S CATALOG NO.
FHWA-CA-TL-79-03		

4. TITLE AND SUBTITLE	5. REPORT DATE
EVALUATION OF ROCK BOLTS FOR INSTALLATION IN EXISTING CONCRETE STRUCTURES	February 1979
	6. PERFORMING ORGANIZATION CODE
7. AUTHOR(S) J. P. Dusel, Jr., D. H. Andersen, and J. R. Stoker	8. PERFORMING ORGANIZATION REPORT NO. 19601-636736
9. PERFORMING ORGANIZATION NAME AND ADDRESS Office of Transportation Laboratory California Department of Transportation Sacramento, California 95819	10. WORK UNIT NO
	11. CONTRACT OR GRANT NO. D-4-134
12. SPONSORING AGENCY NAME AND ADDRESS California Department of Transportation Sacramento, California 95807	13. TYPE OF REPORT & PERIOD COVERED Final Report
	14. SPONSORING AGENCY CODE

15. SUPPLEMENTARY NOTES

This study was conducted in cooperation with the U.S. Department of Transportation, Federal Highway Administration for the project title, "Evaluation of Rock Bolts for Installation in Existing Concrete Structures".

16. ABSTRACT

The purpose of this study was to evaluate the effectiveness of short rock bolts installed in existing concrete at shallow embedment depths and subjected to direct tension loads. It is sometimes desirable to use such devices to mount signs and electroliers on existing bridges, where minimal clearance to edges of concrete and shallow embedment depths are problems commonly encountered. The pullout strengths of 1-inch-diameter hollow core rock bolts having expansion shell head assemblies were determined at four embedment depths (8 to 14 inches) and at small distances to edges of concrete blocks (from 4 to 10 inches). Various bonding materials were used to seal the rock bolts in cored holes and to provide additional pullout strength. Creep under sustained tensile loading was also evaluated. Threaded steel bars bonded in 24-inch-deep core-drilled holes were tested for maximum pullout strength and used as control specimens. Limited group tests of rock bolt pairs were also performed to provide information on the effect of spacing on bolt pullout strengths. The hollow core rock bolts tested in direct tension were found to be effective when installed at a minimum depth of 12 inches and with a minimum edge clearance of 6 inches.

17. KEY WORDS	18. DISTRIBUTION STATEMENT
Rock bolts, pullout tests, anchor bolts, creep, concrete embedments, expansion, anchorages.	No restrictions. This document is available to the public through the National Technical Information Service, Springfield, VA 22161

19. SECURITY CLASSIF. (OF THIS REPORT)	20. SECURITY CLASSIF. (OF THIS PAGE)	21. NO. OF PAGES	22. PRICE
Unclassified	Unclassified	103	

DS-TL-1242 (Rev.6/76)

ClibPDF - www.fastio.com

STATE OF CALIFORNIA
DEPARTMENT OF TRANSPORTATION
DIVISION OF CONSTRUCTION
OFFICE OF TRANSPORTATION LABORATORY

February 1979

FHWA No. D-4-134
TL No. 636736

Mr. C. E. Forbes
Chief Engineer

Dear Sir:

I have approved and now submit for your information this final research project report titled:

EVALUATION OF ROCK BOLTS FOR INSTALLATION
IN EXISTING CONCRETE STRUCTURES

Study made by ..... Structural Materials Branch

Under the Supervision of ..... E. F. Nordlin, P.E.

Principal Investigator ..... J. R. Stoker, P.E.

Co-Investigator ..... J. P. Dusel, Jr., P.E.

Report Prepared by ..... J. P. Dusel, Jr., P.E., and
D. H. Andersen, P.E.

Very truly yours,

Neal Andersen

NEAL ANDERSEN
Chief, Office of Transportation Laboratory

JPD:lb

Attachment

ClibPDF - www.fastio.com

ACKNOWLEDGEMENTS

The authors wish to express their appreciation for the able assistance provided by the following staff members of the Transportation Laboratory in conducting the test program:

Vincent C. Martin	Specimen Testing
Franklin O. Reed	
Roland A. Swirsky	
Walter N. Richards	
Richard Johnson	Instrumentation
Delmar Gans	
William Ng	
David Wong	Concrete Cylinder Testing
Eldon L. Wilson	
Lydia Burgin	Typing

The authors also wish to thank Messrs. John Creed and Robert Skimin of the Office of Structures-Design for providing technical consultation.

Figures 1, 2, 5, and portions of Figures 6 and 18 were reprinted from the 1976 edition of "Williams Rock Bolt Manual", copyright 1976, Williams Form Engineering Corporation, Grand Rapids, Michigan with the permission of that corporation.

ClibPDF - www.fastio.com

CONVERSION FACTORS

English to Metric System (SI) of Measurement

Quanity	English unit	Multiply by	To get metric equivalent
Length	inches (in)or(")	25.40 .02540	millimetres (mm) metres (m)
	feet (ft)or(')	.3048	metres (m)
	miles (mi)	1.609	kilometres (km)
Area	square inches (in^2) square feet (ft^2) acres	6.432×10^{-4} .09290 .4047	square metres (m^2) square metres (m^2) hectares (ha)
Volume	gallons (gal) cubic feet (ft^3) cubic yards (yd^3)	3.785 .02832 .7646	litres (l) cubic metres (m^3) cubic metres (m^3)
Volume/Time			
(Flow)	cubic feet per second (ft^3/s)	28.317	litres per second (l/s)
	gallons per minute (gal/min)	.06309	litres per second (l/s)
Mass	pounds (lb)	.4536	kilograms (kg)
Velocity	miles per hour(mph) feet per second(fps)	.4470 .3048	metres per second (m/s) metres per second (m/s)
Acceleration	feet per second squared (ft/s^2)	.3048	metres per second squared (m/s^2)
	acceleration due to force of gravity(G)	9.807	metres per second squared (m/s^2)
Weight Density	pounds per cubic (lb/ft^3)	16.02	kilograms per cubic metre (kg/m^2)
Force	pounds (lbs) kips (1000 lbs)	4.448 4.448	newtons(N) newtons (N)
Thermal Energy	British thermal unit (BTU)	1055	joules (J)
Mechanical Energy	foot-pounds(ft-lb) foot-kips (ft-k)	1.356 1.356	joules (J) joules (J)
Bending Moment or Torque	inch-pounds(ft-lbs) foot-pounds(ft-lbs)	.1130 1.356	newton-metres (Nm) newton-metres (Nm)
Pressure	pounds per square inch (psi) pounds per square foot (psf)	6895 47.88	pascals (Pa) pascals (Pa)
Stress Intensity	kips per square inch square root inch (ksi $\sqrt{in}$)	1.0988	mega pascals $\sqrt{metre}$ (MPa $\sqrt{m}$)
	pounds per square inch square root inch (psi $\sqrt{in}$)	1.0988	kilo pascals $\sqrt{metre}$ (KPa $\sqrt{m}$)
Plane Angle	degrees (°)	0.0175	radians (rad)
Temperature	degrees fahrenheit (F)	$\frac{tF - 32}{1.8} = tC$	degrees celsius (°C)

ClibPDF - www.fastio.com

TABLE OF CONTENTS

		Page
I.	INTRODUCTION	1
II.	OBSERVATIONS AND CONCLUSIONS	3
	A. Types of Anchorage Devices Tested	3
	B. Existing Specifications Regulating the Steel for Rock Bolt Studs	4
	C. Bonding Materials	4
	D. Minimum Edge Distance Requirements for Hollow Core Rock Bolts	5
	E. Minimum Embedment Depth Required for Hollow Core Rock Bolts	5
	F. Creep Test Results	6
	G. Results of Limited Group Tests on Pairs of Hollow Core Rock Bolts	7
III.	RECOMMENDATIONS AND IMPLEMENTATION	8
	A. Rock Bolts	8
	B. Various Installation Parameters	9
	C. Further Testing	11
	D. Implementation	11
IV	DESCRIPTION OF EXPERIMENTAL PROGRAM	13
	A. Testing Program - General Discussion	13
	B. Test Specimens	14
	1. Materials	14
	2. Specimen Design and Construction	29
	3. Installation of Rock Bolts	32

ClibPDF - www.fastio.com

TABLE OF CONTENTS (Con't.)

		Page
C.	Testing Equipment and Procedures	35
	1. Single Bolt Direct Tension Testing	35
	2. Determination of Minimum Edge Distance By Torque Tests	37
	3. Determination of Minimum Edge Distance By Direct Tension Tests	39
	4. Creep Testing	42
	5. Two-Bolt Group Pullout Testing	43
	6. Description of the Data Collection Methods	43
D.	Detailed Description of the Five Testing Phases	45
	1. Phase 1 - Pullout Tests of Single Rock Bolts	45
	2. Phase 2 - Pullout Tests of Threaded Steel Rods at a 24-Inch Embedment Depth	52
	3. Phase 3 - Testing to Determine Minimum Edge Distance	56
	4. Phase 4 - Creep Testing	63
	5. Phase 5 - Two-Bolt Group Pullout Testing	65
V.	TEST RESULTS AND ANALYSES	68
A.	General Comments	68
B.	The Effect of the Type of Anchorage Device on Pullout Strength	68
C.	The Effect of the Type of Steel for Rock Bolts on Service Life	70
D.	The Effect of the Type of Bonding Material on Rock Bolt Pullout Strength	71

ClibPDF - www.fastio.com

TABLE OF CONTENTS (Con't.)

		Page
E.	The Effect of Edge Distance on Rock Bolt Pullout Strength	72
F.	The Effect of the Hole Depth on Rock Bolt Pullout Strength	73
G.	The Effect of Sustained Loads on Rock Bolt Performance	75
H.	The Effect of Group Action on Effective Pullout Strengths of Rock Bolts	76
VI.	REFERENCES	78
VII.	APPENDICES	80
A.	Diagrams of Concrete Specimens	81-88
B.	Concrete Mix Information	89
C.	Instrumentation Diagram for Measuring and Recording Load and Deflection of Rock Bolts and Threaded Bars	90
D.	Details of Two-Bolt Group Test Fixture and Pull Bar	91
E.	Manufacturer's Current Specifications for 1-Inch-Diameter Hollow Core Rock Bolts and Components	92-93

ClibPDF - www.fastio.com

LIST OF FIGURES

		Page
1.	Two types of rock bolts tested.	16
2.	Two types of expansion shell head assemblies tested.	17
3.	Components of the "ROC-LOC" polyester resin grout.	22
4.	Apparatus for grouting the void space around hollow core rock bolt studs.	26
5.	The setting tool and its use in expanding the head assembly of rock bolts	33
6.	Effective embedment depths of rock bolts utilizing (a) short cone-and-shell and (b) long cone-and-shell head assemblies.	34
7.	Initial direct tension testing apparatus utilizing a pair of I beams.	36
8.	Final direct tension testing apparatus utilizing a steel cylinder.	36
9.	Edge distance test specimen with water seepage denoting a previously undetected crack.	38
10.	Overall view of test apparatus for Phase 3 edge distance pullout testing.	40
11.	Testing apparatus used to evaluate pullout strength of ungrouted rock bolts installed at various edge distances.	41
12.	Test setup for sustained loading creep tests.	42
13.	Two-bolt group test showing block suspended from upper crosshead of testing machine.	44
14.	Threaded No. 11 steel reinforcing bars used to suspend test blocks.	44
15.	Two-bolt group test apparatus showing block with loading fixture and pull bar attached.	44

ClibPDF - www.fastio.com

LIST OF FIGURES (Con't.)

		Page
16.	Creep rate of a single rock bolt loaded with a 25 kip sustained load for 100 hours.	64
17.	Typical load-deflection curve for a pair of hollow core rock bolts tested in direct tension.	67
18.	Theoretical spacing required to develop maximum pullout loads of individual rock bolts.	77

ClibPDF - www.fastio.com

LIST OF TABLES

		Page
1.	Description of anchor bars tested.	19
2.	Strength of anchor bar steel.	20
3.	Chemical composition of steel in rock bolt studs tested.	20
4.	Components of the polymer concrete grout.	24
5.	Summary of concrete test specimens used for rock bolt research.	30
6a.	Results of initial rock bolt pullout tests in unreinforced concrete specimens.	47
6b.	Results of pullout tests of hollow core rock bolts installed in nominally reinforced concrete blocks at hole depths of 8 and 12 inches.	49
6c.	Results of pullout tests of rock bolts installed in holes 10 and 14 inches deep and bonded with various materials.	51
7a.	Results of pullout tests of threaded rods.	53
7b.	Results of pullout tests of ASTM A449 threaded rods bonded with polyester resin and polymer concrete.	54
7c.	Results of pullout tests of ASTM A449 threaded rods bonded with polyester resin and epoxy.	55
8a.	The effect of high installation torques and close edge distances on concrete soundness around unbonded rock bolts.	58
8b.	The effect of close edge distances at corners of concrete blocks on pullout strengths of grouted rock bolts.	60
8c.	The pullout strengths of ungrouted hollow core rock bolts near edges of concrete blocks.	62
9.	Results of two-bolt group pullout testing.	66
10.	Pullout strengths of 1-inch-diameter rock bolts installed at various hole depths.	74

ClibPDF - www.fastio.com

I. INTRODUCTION

In the course of improving California's existing highway system, it sometimes is necessary to install new or enlarged overhead signs, electroliers, and earthquake motion restrainers on existing concrete bridges. Equipping older bridges with such devices often requires that special anchor bolts, capable of restraining high tensile loads, be installed. Small edge distances and shallow embedment depths in the concrete are common limitations which are encountered when installing anchorage systems, and which regulate the magnitude of loads that can be applied to the anchor bolts.

Currently there is a lack of conclusive test data concerning the strength and effectiveness of large anchorage devices at shallow embedment depths. Information is also lacking on satisfactory methods of installation that will develop the high pullout strengths necessary to secure overhead sign bases, bridge hinge restrainers, etc., in concrete. Tests performed on some of the popular conventional expansion anchors have shown that under a sustained tensile load, excessive creep is a common problem. Short anchor bolts bonded in drilled holes with grout or mortar have often proved unreliable in their load-carrying capacity. Anchor bolts which are bonded with epoxies in drilled holes also have a tendency to creep under sustained loads. Horizontally mounted anchor bolts which are post-bonded with epoxy or portland cement grouts are difficult to install. Some polyester resins used as bonding materials in rock bolt systems have been known to creep when exposed to high ambient temperatures such as those that exist in California's Central Valley and Mojave Desert during the summer months.

ClibPDF - www.fastio.com

In this research project, two types of commercially available 1-inch-diameter rock bolts were installed in core drilled holes in concrete and tested for pullout load capacity. Results were compared with those of 1-inch-diameter threaded steel bars bonded in 24-inch-deep core drilled holes. Important variables likely to affect performance of these rock bolts in concrete were considered to be: the type of bolt, embedment depth, edge distance, type of bonding material used, and creep of the installed bolt system under sustained tensile load. The effect of groups of bolts and their spacing on total pullout strength was also considered important and limited two-bolt group tension tests were conducted.

ClibPDF - www.fastio.com

II. OBSERVATIONS AND CONCLUSIONS

The following observations and conclusions were drawn from the results of tests performed in this research project. They are applicable only to the grade of steel supplied for the tests and as currently utilized by the manufacturer of the rock bolts tested.

A. Types of Anchorage Devices Tested

1. Rock Bolts

Hollow core groutable rock bolts and solid bar rock bolts were investigated. Of the two types, the 1-inch-diameter hollow core groutable rock bolt performed better in concrete than the 1-inch-diameter solid bar rock bolts tested in limited direct tension tests. Both a higher slip point (as defined in Section IV.C.6, page 45 of this report) and a higher ultimate pullout strength were obtained in tests using hollow core rock bolts, than with solid bar rock bolts.

Rock bolts can be furnished with either a short or a long-cone-and-shell head assembly. Both types of expansion shell head assemblies were evaluated in limited pullout tests where rock bolts were installed in the center of concrete blocks and both worked well. At a shallow embedment depth of 8 inches, 1-inch-diameter rock bolts equipped with the long cone-and-shell head assembly provided slightly higher loads at the slip point than did the rock bolts equipped with the short cone-and-shell head assembly (see Table 6b, page 49). There is no distinct advantage in using a long cone-and-shell head assembly as opposed to a short cone-and-shell head assembly if rock bolts are installed at embedment depths of 12 inches or greater and at large edge distances. Only long cone-and-shell head assemblies were tested at small edge distances.

ClibPDF - www.fastio.com

2. Threaded Steel Rods

Pullout tests conducted with 1-inch-diameter threaded steel rods, machine threaded their entire length and bonded in 24-inch-deep holes in concrete revealed that:

- Lack of bond and excessive creep were problems present with both the polyester resin and polymer concrete systems used to bond the threaded rods.

- Epoxy conforming to California Department of Transportation (Caltrans) State Specification No. 8040-61J-03 worked well as a bonding material, providing a high slip point of 40 kips, and developing the ultimate strength of the ASTM A449 threaded bars. It should be mentioned here that although high pullout loads were obtained using epoxy in short term static load tests, it is well known that the epoxy will creep when subjected to sustained axial tension loads.

B. Existing Specifications Regulating the Steel for Rock Bolt Studs

Manufacturers current specifications regulating the quality of the steel used for 1-inch-diameter hollow core rock bolt studs as shown in Appendix E are too general for anchor bolts to be used for structural applications subject to dynamic loads. The current specifications, however, would be satisfactory for rock bolts subject to static or "dead load" forces or to nonrepetitive dynamic loads.

C. Bonding Materials

Used in conjunction with 1-inch-diameter hollow core groutable rock bolts, a grout made with Wil-X cement, a shrinkage

ClibPDF - www.fastio.com

compensating portland cement, was found to be the most effective of any of the bonding materials tested in this research project. It was easy to mix and apply using a small hand grout pump, and is relatively inexpensive and strong. The Wil-X cement grout, because of its alkaline nature, protected the rock bolts from corrosion. It fills voids thoroughly around the rock bolt stud and expansion shell head assembly and by virtue of its ability to bond well with the surrounding concrete, improves the pullout strength of the rock bolts considerably.

D. Minimum Edge Distance Requirements for Hollow Core Rock Bolts

It was found that the full tensile strength of a single 1-inch-diameter hollow core rock bolt equipped with a long cone-and-shell head assembly and installed in a 12-inch-deep hole, could be developed at a 6-inch edge distance in the corner of a nominally reinforced concrete block. This edge distance was measured from the center of the rock bolt to the edge of the concrete block.

At edge distances smaller than 6 inches, installation torques of 350 ft. lbs., 40 percent higher than those normally required to expand the long cone-and-shell head assembly, caused cracking of the concrete near the rock bolt.

E. Minimum Embedment Depth Required for Hollow Core Rock Bolts

It was concluded from pullout tests on individual 1-inch-diameter hollow core rock bolts that the ultimate strength of the hollow core rock bolt with a long cone-and-shell head assembly could be developed in concrete when installed

ClibPDF - www.fastio.com

in a 10-inch-deep hole, as shown from results present in Table 10, page 74.

The tensile load at which the slip point or elastic limit of an anchorage system occurs, however, appears to be significantly increased when rock bolts are installed in holes 12 inches deep.

It appears that the minimum hole depth at which maximum slip loads and pullout strengths are obtained for 1-inch-diameter hollow core rock bolts with long cone-and-shell head assemblies and bonded with Wil-X cement grout is 12 inches. At this hole depth, the effective embedment depth of the center of the shell portion of the long cone-and-shell head assembly is 7 3/4 inches (see Figure 6, page 34).

The average slip point load of 35 kips, obtained for 1-inch-diameter hollow core rock bolts with long cone-and-shell head assemblies bonded with Wil-X cement grout in 12-inch-deep holes, is near the yield point of the hollow core rock bolt stud; the average maximum pullout load obtained, 50 kips, is near the minimum guaranteed ultimate tensile strength of the rock bolt stud.

F. Creep Test Results

A 100-hour sustained load test was conducted on a 1-inch-diameter hollow core rock bolt with a long cone-and-shell head assembly bonded with Wil-X cement grout in a 12-inch-deep hole at a 10-inch edge distance. A tensile load of 25 kips was maintained for a period of 100 hours. This load represented a typical design load and is approximately 70 percent of the slip point load, or elastic limit. After 100 hours of sustained load, only 0.002 inch of creep was

ClibPDF - www.fastio.com

measured. Although only a single test was conducted with one set of parameters, it is felt that a similar rock bolt system would also develop negligible creep with a hole depth of at least 12 inches and a minimum edge distance of 6 inches.

G. Results of Limited Group Tests on Pairs of Hollow Core Rock Bolts

With pairs of 1-inch-diameter hollow core rock bolts having long cone-and-shell head assemblies installed in 12-inch-deep holes at an edge distance of 6 inches, high slip point loads were obtained when the spacing between rock bolts was as small as 6 inches. Results of the four tests are shown in Table 9 on page 66 of this report. Slip point load values of approximately 70 kips were found to be typical for the rock bolt pairs, and were approximately twice those found for single rock bolts. Ultimate pullout loads, however, averaged only 80 kips and 84 kips for the pair of rock bolts having a 6-inch and 12-inch spacing, respectively. These values of ultimate pullout loads of the rock bolt pairs were only about 80 percent of the combined ultimate loads which should result from two individual rock bolts separated far enough apart to act independently. In theory, the maximum ultimate pullout load for the rock bolt pairs is expected to occur at a bolt spacing somewhere near 15 1/2 inches where the 45 degree failure cones separate (see Figure 18, page 77).

Although results of the pullout tests conducted on pairs of rock bolts were excellent with respect to their slip point load, similar testing performed on a larger group of rock bolts may indicate that a substantial reduction in the actual design load per bolt is necessary.

ClibPDF - www.fastio.com

III. RECOMMENDATIONS AND IMPLEMENTION

Based on the testing and evaluation of rock bolts conducted in this research study, the following recommendations are made:

A. Rock Bolts

1. Type of Steel Used in Rock Bolt Studs

The specifications for rock bolt studs currently used by the manufacturer are satisfactory for static or nonrepetitive dynamic load conditions. However, for structure applications involving cyclic fatigue loads, it is recommended that steel used in the manufacture of the hollow core rock bolt studs conform to all the requirements in ASTM Designation: A706, Low-Alloy Steel Deformed Bars For Concrete Reinforcement, or a similar material of the same strength level with a controlled chemistry to assure the attainment of a product with a suitable level of toughness and ductility.

2. It is recommended that the studs be hot-dip galvanized according to the requirements in ASTM Designation: A153 and conform to requirements in the State of California, Department of Transportations Standard Specifications.

3. Type of Expansion Shell Head Assembly

Either the short cone-and-shell or long cone-and-shell head assembly as manufactured by Williams Form Engineering Corporation or the equivalent be permitted to be used where edge distances are large. Specifications regulating the quality of material used in the head assembly components of rock bolts should agree with the existing Caltrans

ClibPDF - www.fastio.com

regulations for expansion anchor parts. Where edge distances are small or minimal, it is recommended that only the long cone-and-shell head assembly be used, so that the lateral forces from the expanded shell will be distributed over a greater area.

B. Various Installation Parameters

1. Method of Drilling Holes

A drilling method which produces a clean round hole should be used. In one acceptable method used in this research, a diamond-impregnated core bit was used. With such a bit a smooth hole is produced, which provides an even bearing surface for the shell of the head assembly. It is further recommended that such a method be used when it is necessary to drill a group of holes where maintaining an exact hole spacing is important and when it is necessary to drill through reinforcing steel. When holes are produced using a diamond-impregnated core bit or in a similar drilling operation, in which water is forced into the hole and aournd the tip of the bit, further cleaning of the hole sides after drilling does not significantly improve the bond between the grout and concrete. However, when a drilling method is employed in which no water is pumped into the hole while drilling, and a considerable amount of concrete dust remains on the sides of the drilled holes, it has been determined that a thorough cleaning with water and a brush following the drilling operation does substantially improve the concrete/grout bond strength (6).

2. Hole Depth

For 1-inch-diameter, hollow core rock bolts whose steel has a minimum specified strength at the yield point of 60.0 ksi

ClibPDF - www.fastio.com

as tested in this project, it is suggested that a hole depth of 12 inches be required when an optimum tensile load at the elastic limit of the bolt-concrete system is desired.

3. Required Hole Diameters and Torque Specifications to Expand Rock Bolt Head Assemblies

In general, hole diameters and torque specifications specified by the manufacturer should be followed. For 1-inch-diameter hollow core rock bolts, a torque of 250 foot-pounds as recommended by the manufacturer to expand the head assembly, was used in this research project. A hole diameter of 1 3/4 inches was also specified and used for all 1-inch-diameter rock bolts installed in this study.

4. Minimum Distance to the Edge of the Concrete Foundation

It is recommended that a minimum edge distance of 6 inches should be used with 1-inch-diameter rock bolts to avoid cracking of the concrete upon expanding the head assembly on each rock bolt. For rock bolts having diameters other than 1 inch or when the foundation concrete has a compressive strength less than 4000 psi, a change in minimum edge distance may be necessary.

5. Type of Acceptable Bonding Materials

A type K expansive hydraulic cement conforming to requirements in ASTM Designation: C845 should be used when grouting hollow core rock bolts.

Of the various bonding or grouting materials used with hollow core rock bolts in this study, Wil-X cement grout,

ClibPDF - www.fastio.com

made from an expansive cement which meets the requirements in ASTM Designation: C845 (Type K), performed the best. Consistently high pullout strengths were obtained using this material. Manufacturers recommended mix proportions and installation instructions for this grout should be used when applying this material.

6. Minimum Spacing Required for Pairs of Rock Bolts

Limited tests were conducted on pairs of 1-inch-diameter hollow core rock bolts spaced 6 inches and 12 inches apart and at a 6-inch edge distance. Although in all tests conducted with pairs of rock bolts the full yield strength of each anchor bolt was developed, it is recommended that the larger 12-inch spacing be used, especially when minimum 6-inch edge distances are necessary. When larger groups of rock bolts are to be installed or where loading conditions will involve combined or cyclic loading, it is recommended that additional group pullout tests be conducted for special conditions encountered.

C. Further Testing

It is recommended that further testing be conducted to determine:

(1) The effect which larger groups of rock bolts have on the average yield point and maximum pullout strengths.

(2) The yield points and maximum tensile loads of groups of rock bolts where actual bolt patterns of a special sign installation are used.

(3) The effect of combined loading and cyclic loading on the yield point and maximum pullout strengths of groups of hollow core rock bolts.

ClibPDF - www.fastio.com

(4) The effect of using Type II Modified portland cement grout as a bonding material on the pullout strength of hollow core rock bolts.

(5) The effects of mechanical wedging alone on pullout strengths of ungrouted rock bolts installed at various hole depths.

(6) The effects of using long versus short cone-and-shell head assemblies on the minimum recommended edge distance.

D. Implementation

It is expected that the Office of Structures Design will review the findings of this study and evaluate the feasibility of utilizing rock bolts in concrete structures. Specific examples where rock bolts might be desirable would include (1) locations where concrete thickness is limited and would preclude the use of conventional grouted dowels or (2) locations where economics would favor the use of rock bolts at shallower embedment depths than those required for grouted dowels.

ClibPDF - www.fastio.com

IV. DESCRIPTION OF EXPERIMENTAL PROGRAM

A. Testing Program - General Discussion

The purpose of this research program was to develop a reliable anchorage system to secure (1) sign standards, (2) lighting standards, and (3) seismic motion hinge restrainers into existing concrete structures. Since conventional expansion anchors have been found to be unreliable in sustaining large tensile loads, 1-inch-diameter rock bolts were considered.

In this study the following parameters were deemed important:

(1) Type of rock bolts.
(2) Embedment depth.
(3) Pullout load capacity.
(4) Distance from rock bolt to edge of concrete.
(5) Type of bonding material and installation procedures.
(6) Influence of rock bolt spacing on group pullout strengths.
(7) Ability of rock bolts to resist sustained tensile loads.

Two types of rock bolts were examined in this research, one having a solid bar stud and the other a deformed bar stud with a hollow core. Both types of rock bolts came with expansion shell head assemblies. Both types of studs were 1 inch in diameter and had 1-8 UNC threads on each end. The hollow core rock bolt has a small elliptically shaped hole through its center. This hole provides a passageway for pumping grout around the rock bolt and the expansion shell head assembly. Pullout strengths of deeply embedded threaded steel rods were also determined using various types of grouts, and these pullout strengths were compared with those found for the rock bolts.

ClibPDF - www.fastio.com

The research program was subdivided into five different phases which included:

(1) Determination of maximum pullout strengths of the 1-inch-diameter rock bolts installed at various embedment depths in concrete.

(2) Determination of maximum pullout strengths of 1-inch-diameter threaded steel rods installed in 24-inch-deep holes in concrete.

(3) Testing the effect of high torques required to expand the head assemblies on rock bolts during installation on soundness of concrete when rock bolts were installed near the edges and corners of concrete blocks. Determination of minimum edge distances required to develop maximum pullout strength of 1-inch-diameter rock bolts.

(4) Determination of the creep rate of 1-inch-diameter rock bolts installed in a lightly reinforced concrete block.

(5) Direct tension tests performed on pairs of 1-inch-diameter rock bolts to determine the effect of the distance between rock bolts on the total pullout strength of the pair of rock bolts.

B. Test Specimens

1. Materials

a. Anchorage Devices

Two basic categories of anchorage devices were tested in this study. The categories are (1) rock bolts having

ClibPDF - www.fastio.com

mechanical expansion devices and (2) threaded rods made from steel bars conforming to the requirements in ASTM Specifications A307 and A449.

At the beginning of this research, various rock bolts manufactured by different companies were considered for evaluation and testing. When the rock bolts were purchased, all but one manufacturer, Williams Form Engineering Company, had discontinued production. Two types of rock bolts with expansion shell head assemblies produced by Williams were evaluated. One type is called a hollow core, groutable "re-bar" rock bolt, and the other a solid bar "spin-lock" rock bolt. The hollow core rock bolt has a deformed bar stud whereas the solid bar rock bolt has a smooth stud. These are illustrated in Figure 1. All rock bolts tested were 1 inch in nominal diameter, and approximately 4 inches at each end of the rock bolt stud was threaded with 1-8 UNC threads.

Basically, two things contribute to the pullout strength of the rock bolts in concrete: (1) friction between the expansion shell head assembly at the bottom end of the rock bolt and the sides of the drilled hole, and (2) mechanical interlock and bond of the grouting materials around the anchorage device and the sides of the drilled hole.

The solid bar and hollow core, groutable rock bolts, shown in Figure 1, were tested for maximum pullout strength using two different types of head assemblies, a short cone-and-shell and a long cone-and-shell. These two types of expansion shell head assemblies are shown in Figure 2. The parts of each assembly are basically the same and consist of (1) a cone, (2) a malleable expansion shell,

ClibPDF - www.fastio.com

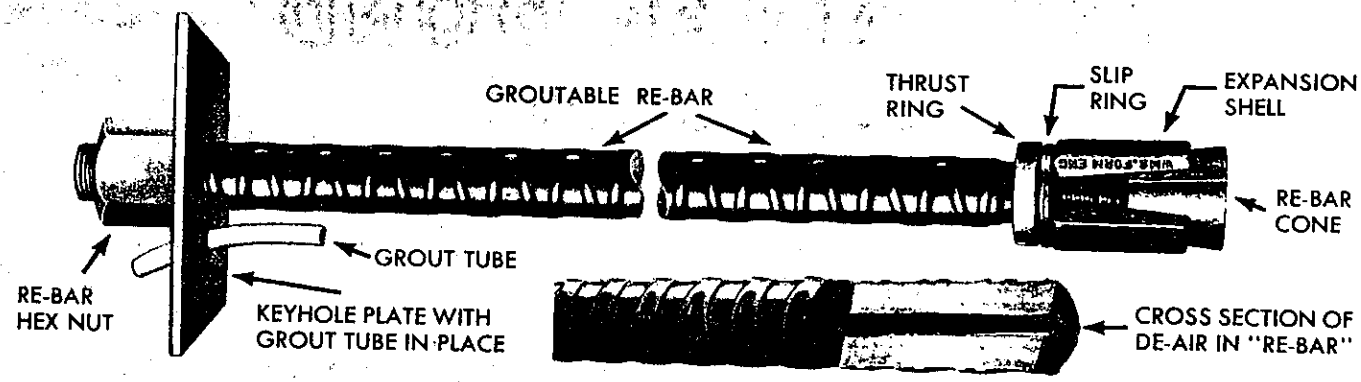

A. Hollow core, groutable "re-bar" rock bolt with expansion shell head assembly.

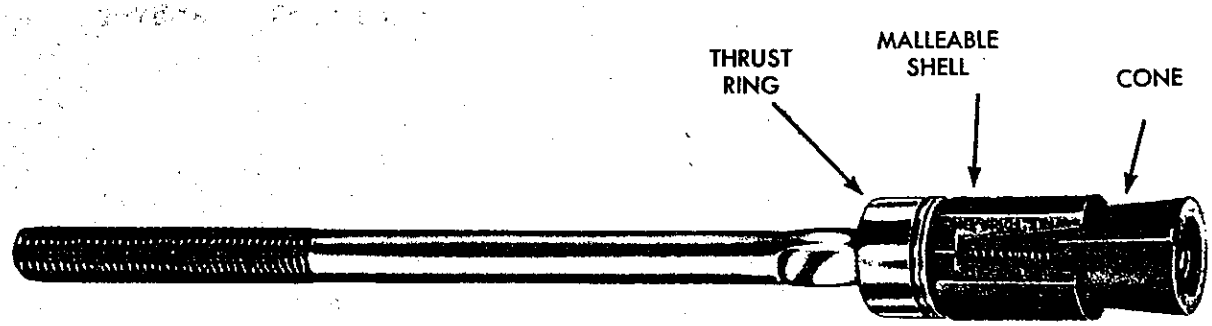

B. Solid bar "spin-lock" rock bolt with expansion shell head assembly.

Figure 1 - Two types of rock bolts tested.

ClibPDF - www.fastio.com

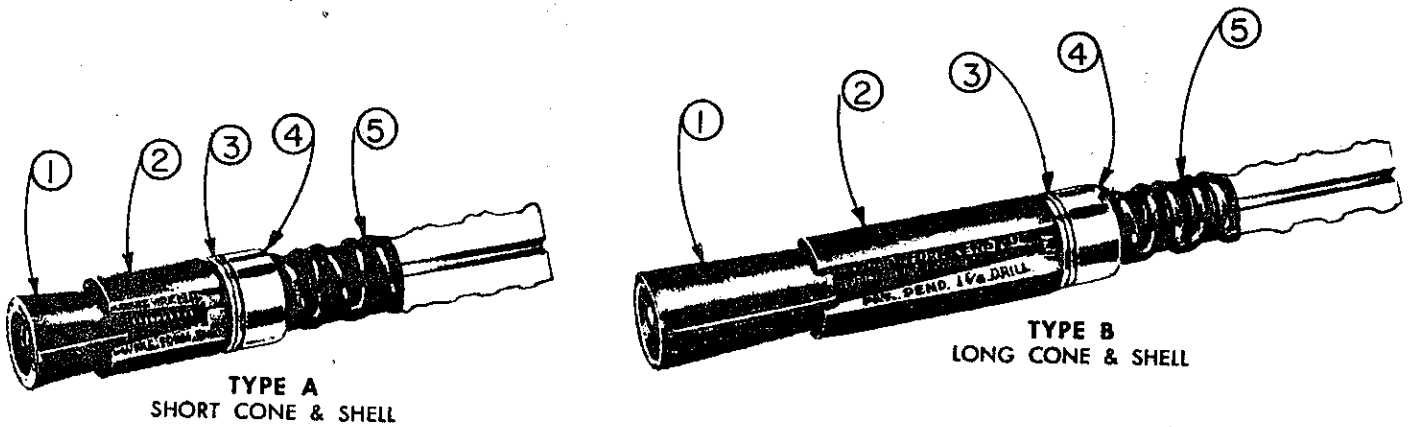

(1) Cone (with 1-8 UNC female threads)
(2) Malleable shell
(3) Two slip washers
(4) Thrust ring
(5) Rock bolt stud (hollow core stud shown)

Figure 2 - Two types of expansion shell head assemblies tested.

ClibPDF - www.fastio.com

(3) two slip washers, and (4) a thrust ring. The thrust ring, a hardened sleeve with female threads, which initially is tightened onto the threads of the lower end of the rock bolt stud by the manufacturer, provides a fixed bearing surface for the slip washers and expansion shell. The slip washers allow the expansion shell bearing surface to easily slip against the rigid thrust ring as the rock bolt is initially installed. The malleable expansion shell is a hollow cylindrical steel sleeve having parallel exterior walls whose thickness is tapered to provide a good fit for the mating cone frustrum projecting into the interior cavity of the expansion shell. The shell is slotted fully along one side to provide a keyway for the raised ridge on the cone frustrum and partially slotted on the opposite side. The cone frustrum at the bottom of the head assembly is threaded onto the bottom of the rock bolt stud and is drawn into the hollow expansion shell as the rock bolt stud is turned during installation. Once the malleable shell has begun to expand and is locked to the sides of the drilled hole through friction, the raised ridge on the cone frustrum, as seen in Figure 2, prevents the cone from turning with the rock bolt stud during installation.

For purposes of comparison of pullout strengths, 1-inch-diameter threaded steel rods, conforming to requirements in ASTM Specifications A449 and A307, were installed in 24-inch-deep core-drilled holes in concrete, using various bonding materials, and tested. The steel rods tested were threaded their entire length to provide a good mechanical interlock between the rod surface and the bonding material.

Tensile tests were performed on specimens of the steel studs or rods used in the types of anchorage devices shown in Table 1.

ClibPDF - www.fastio.com

Table 1 - Description of anchor bars tested.

Anchor bar type	Head assembly type	Thread type	Diameter	Rod type	Steel grade
Williams rock bolt	Long cone-and-shell	Unified National Coarse, 8 threads per inch	1 in.	Hollow groutable "re-bar" steel	AISI Grade 1040
Williams rock bolt				Solid bar "spin-lock" stud	AISI Grade 1065
Williams rock bolt	Short cone-and-shell			Hollow groutable "re-bar" stud	AISI Grade 1040
Williams rock bolt				Solid bar "spin-lock stud	AISI Grade 1065
Threaded rod	None			Solid rod-threaded entire length	ASTM A307
Threaded rod				Solid rod-threaded entire length	ASTM A449

NOTE: The elliptically shaped hole in the center of the hollow core rock bolt is approximately 0.25 inch x 0.31 inch. This hole reduces the tensile stress area in the threaded region from 0.606 in.^{2} to 0.544 in.^{2}.

ClibPDF - www.fastio.com

The yield and ultimate strengths of the steel in the 1-inch-diameter rock bolt studs or threaded anchor rods tested are shown in Table 2.

Table 2 - Strength of anchor bar steel.

Type of anchor bar	Yield strength, kips	Stress at yield, ksi	Ultimate strength, kips	Stress at ultimate, ksi
1-inch-diameter threaded rod				
ASTM A449	53.0	87.5	62.7	103.5
ASTM A307	32.0	52.8	36.0	59.4
Hollow core rock bolts	37.0	68.0*	53.3	98.0
Solid bar rock bolts	44.5	73.4	73.2	120.8

*Stress area = 0.544 in^2

In order to determine the composition of the steel used in the studs for the two types of rock bolts investigated in this study, a chemical analysis was performed on each. Percents of various primary elements found in the steels tested are shown below in Table 3.

Table 3 - Chemical composition of steel in rock bolt studs tested.

Element	Amount of element in steel, percent	
	Hollow core, groutable "rebar" rock bolt	Solid bar rock bolt
Carbon	0.40	0.62
Molybdenum	0.01	0.00
Chromium	0.09	0.02
Manganese	0.78	0.73
Silicon	0.26	0.18
Phosphorus	0.01	0.01
Sulfur	0.03	0.03

ClibPDF - www.fastio.com

From the above results of these chemical analyses, steel used to manufacture the studs for hollow core, groutable "re-bar" rock bolts was deemed to be AISI Grade 1040 and that used in the studs for the solid bar "spin-lock" rock bolts is probably either AISI Grade 1060 or 1065.

b. Bonding Materials

A number of materials were used as bonding or grouting agents in this study. Most of these were proprietary materials and were as follows:

- ROC-LOC - A polyester resin developed for grouting rock bolts.

- Polymer concrete - A Type II Modified portland cement, Ottawa sand and an experimental mixture of monomers, a catalyst, and a promoter which polymerizes to form a high strength concrete.

- Epoxy - A low density liquid polysulfide extended epoxy meeting California Department of Transportation Standard Specification 8040-61J-03.

- Wil-X cement - A shrinkage compensating portland cement which when mixed with water makes a fluid grout.

- Burke's No-Shrink Grout - A shrinkage compensating portland cement that contains a nonmetallic aggregate filler.

- EMBECO 153 grout - A portland cement with an iron compound aggregate which acts as an expansive agent, and fine sand.

- Master Flow 713 grout - A shrinkage compensating portland cement with a nonmetallic aggregate filler.

ClibPDF - www.fastio.com

The bonding materials are discussed in more detail in the following sections:

ROC-LOC

ROC-LOC is the trade name for a specific type of polyester resin developed by Cyanamid of Canada, Ltd., Montreal, P.Q. for grouting rock bolts. The unmixed resin components are available in a 2 1/2-gallon plastic pail which also serves as a mixing container. The three unmixed materials consist of (1) the resin - a white paste, (2) the hardener - a dark gray powder, and (3) a catalyst - to be used where temperatures lower than 65°F prevail. The components are shown in Figure 3.

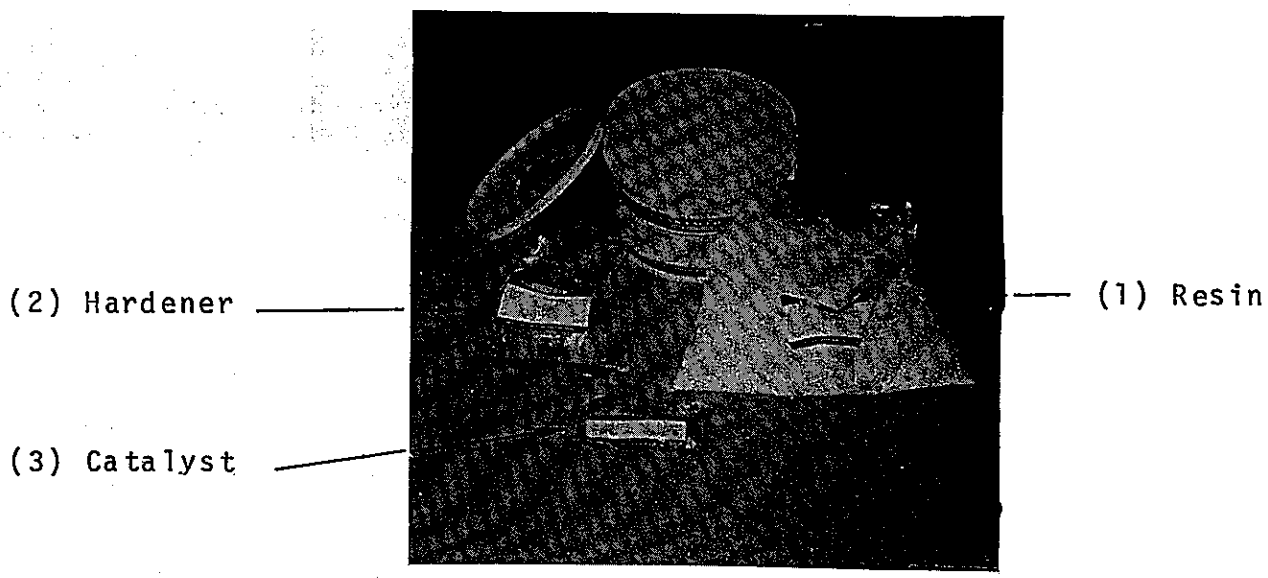

Figure 3 - Components of the "ROC-LOC" polyester resin grout.

ClibPDF - www.fastio.com

ROC-LOC has a shelf life of 6 months when stored at a temperature of 60°F or below. The gel time is the time required for the mixed paste to turn into a plastic non-transferable mass. The gel time decreases with an increase in the ambient temperature. The cure time is the time required for the mixed resin to fully harden, and is also dependent on the ambient temperature. The mixing ratio required is 4 volumes of paste to 1 volume of hardener. The paste and the hardener are blended thoroughly until a uniform gray color has been achieved. In tests conducted in Phase 1, the mixture was initially loaded into a hand-operated grease gun and an attempt was made to pressure grout the hollow core rock bolts. The grease gun, however, clogged continually. Finally, the resin was poured into the drilled holes after the rock bolts had been placed and torqued. In Phase 2, ROC-LOC was used to bond the 1-inch-diameter threaded rods. The method of placing ROC-LOC around the threaded bars was essentially the same as with the rock bolts in the later part of Phase 1. The ROC-LOC was first poured into the holes and then the threaded bars were inserted and worked up and down to eliminate voids. The handling of the ROC-LOC mixture was quite messy when divided into small portions. Initial pullout tests were conducted where ROC-LOC was cured for only a 24-hour period. It was later determined that a minimum 7-day curing period was required for the resin to reach maximum strength. No filler material was added to the resin.

Polymer Concrete

The polymer concrete grout consisted of the components listed in Table 4. A "soak" solution was prepared first. The batch weights of the soak solution are also listed in Table 4. Nine parts methyl methacrylate and one part

ClibPDF - www.fastio.com

Table 4 - Components of the polymer concrete grout.

Component	Function	Amount of component in soak solution grams	Amount of component in polymer concrete grams
Ottawa sand -ASTM C109	Filler	-	333
Ottawa sand -ASTM C190	Filler	-	333
Portland cement -type II Modified	Filler	-	333
Methyl Methacrylate	Monomer	180	299.7
Trimethylolpropane Trimethacrylate	A cross linking agent	20	33.3
Silane	A coupling agent	2	1.2
Benzoyl Peroxide	Catalyst	4	2.5
Dimethylaniline	Accelerator	8	5.0
Total Weight of Components		214	1340.7

ClibPDF - www.fastio.com

trimethylolpropane trimethacrylate were mixed together initially and then remixed with the rest of the soak components. The solution was poured into the cored holes, allowed to soak for 5 minutes, and then the excess solution was siphoned out. Another batch of solution was prepared. This time it was mixed with Ottawa sand and Type II Modified portland cement for placing in the holes with the threaded rods. The mixture was poured around the rods. The rods were then tapped to consolidate the mixture in the hole. Final setting time of the mixture was about 20 minutes.

Epoxy

The epoxy used in this study was a medium setting, low viscosity, liquid, polysulfide-extended epoxy conforming to the California State Specification 8040-61J-03 (Standard Specifications, Section 95). The gel time was 21 to 31 minutes. The minimum cure time was 24 hours at 77°F. The epoxy was used in the fifth phase of the testing program in which 1-inch-diameter ASTM A449 threaded bars were bonded in 1 1/4-inch-diameter, 24-inch-deep cored holes. No filler was added to the epoxy which made it easier to pour. The epoxy was maintained at a temperature of 75°F before using. The holes were cleaned and dried completely before placing the bars and epoxy. Two volumes of resin were added to one volume of hardener. The batch was blended until uniform in color. The epoxy poured easily into the holes. The threaded rods were then pushed into the holes and worked up and down to eliminate voids. Steel blocks were used to hold the rods in the center of the hole until the epoxy cured.

ClibPDF - www.fastio.com

Wil-X Cement

Wil-X cement is a shrinkage compensating portland cement developed specifically for grouting rock bolts. It is marketed by the Williams Form Engineering Corporation for use with their hollow core groutable rock bolts. The Wil-X cement grout was used to fill the void space around hollow core rock bolts by pumping it with a hand grout pump. The hollow core rock bolts may be grouted either by (1) screwing a grout tube adapter sleeve onto the top of the rock bolt stud and pumping grout through the center of the hollow stud until excess grout emerges from the void space around the sides of the rock bolt stud, or by (2) sealing the void space around the sides of the rock bolt stud and pumping grout through a plastic tube inserted into this space until the grout flows out of the hole in center of the hollow core rock bolt stud. Both grouting methods were used in this research and worked well. The second method is depicted in Figure 4.

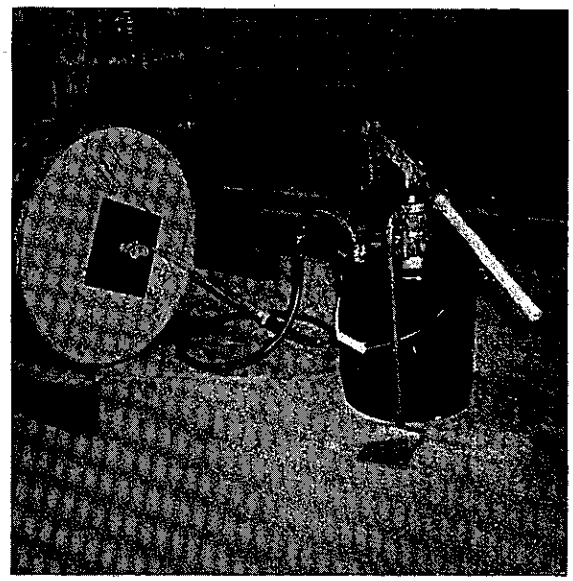

Figure 4 - Apparatus for grouting the void space around hollow core rock bolt studs.

ClibPDF - www.fastio.com

The solid bar rock bolts were grouted by inserting the plastic tube from the grout pump into each hole in the concrete as far as it could go. The grout was pumped until it completely filled the void around each bolt. This procedure worked very well. The water/cement ratio used in the Wil-X cement grout mix was 0.40.

Burke's Grout

Burke's Grout, perhaps should be correctly called a mortar, as it contains 50% of a shrinkage compensating portland cement and 50% of a nonmetallic aggregate of which 100% passes a No. 8 sieve. The manufacturer's brochure specified a mixing ratio of 1 1/4 gallons of water to 50 pounds of grout for a pumpable mixture. However, the fine aggregate continually clogged the hand pump used for grouting. The researchers concluded that the satisfactory pumpability claimed by the manufacturer applied to a larger, different type of grout pump. In order to grout the rock bolts it was finally necessary to pour and rod the grout in the void space around each rock bolt. Certainly all voids around and under the expandable head assembly were not filled by using this procedure, however, the major void around the sides of the rock bolt stud was filled.

EMBECO 153 Grout

EMBECO 153 (made by Master Builders Co., Cleveland, Ohio) is composed of a portland cement mixed with iron particles and a small percentage of fine sand. A slight amount of grout expansion results when the small percentage of chloride present in the grout reacts with the iron particles in the grout. When this chemical reaction occurs, the compound increases in volume and exerts a force against

ClibPDF - www.fastio.com

the surfaces restraining the grout. Before placing the grout, the holes drilled in concrete were cleaned with water. According to installation instructions by the manufacturer, the water was left in the holes for a period of 6 hours to saturate the sides of each hole. The water was siphoned from the holes just before installing the rock bolts and placing the grout.

A ratio of 9 pounds of water to a 55-pound bag ($\frac{W}{C}$=0.16) of grout was used as suggested in the manufacturer's instructions. After the grout was mixed, it was poured into the hole around the installed rock bolt and consolidated with a length of welding rod. As recommended in installation instructions provided by the manufacturer, this expansive grout was securely restrained while curing. A 4-inch square steel plate was placed over the stub of the protruding stud and forced to bear securely on top of the concrete surrounding the grouted hole by a nut threaded onto the stud. This plate served two purposes. It restrained the expansion of the grout in the direction toward the top of the hole, permitting high lateral expansive forces of the grout to be exerted against the sides of the hole, and it provided cover for the grout to prevent water loss while curing.

Master Flow 713 Grout

Master Flow 713 (MF713), also made by Master Builder's of Cleveland, Ohio, contains a mixture of nonmetallic fine aggregate and a shrinkage compensating portland cement. The procedure for placing the MF713 was the same as for the EMBECO 153 except that the concrete sides of the core-drilled holes were soaked for 24 hours instead of 6 hours, as per installation instructions by the manufacturer. The exposed surface of the grout was kept moist with damp rags for 3 days.

ClibPDF - www.fastio.com

c. Concrete

The concrete used for constructing all test blocks in this research project contained well graded Fair Oaks river-run aggregates having a maximum size of 1 inch and meeting the requirements in Caltrans Standard Specifications, Section 90-3. A cement content of 564 pounds per cubic yard was used, and an average slump of 3 inches was attained. The average compressive strength of the cured concrete at the time of all tests was 4,000 psi. This was determined by testing 6-inch x 12-inch concrete cylinders which were cast from the same batches of concrete used to make the concrete blocks and cylinders. Information about the concrete mix design is shown in Appendix B.

2. Specimen Design and Construction

a. Block and Cylinder Construction

Various sizes and shapes of concrete test specimens were used in this research study. A general summary of these specimens is shown in Table 5 and detailed drawings of each type of specimen cast are shown in Appendices A-1 through A-8.

ClibPDF - www.fastio.com

Table 5 - Summary of concrete test specimens used for rock bolt research.

Test specimen size	Type of rebar reinforcement	Used in phase	Test purpose	Appendix reference
2'x2'x2'	None	1	To determine the maximum pullout loads in direct tension.	A-1
2'x2'x2'	Nominal	1		A-2
22 1/2" Dia. x 33 3/4" high cylinders	9" ϕ Spiral	2	To determine the pullout strengths of rock bolts and threaded bars bonded with various grouts.	A-3
	12" ϕ Spiral	1 & 2		A-4
	None	1		A-5
2'x2'x4'-10"	Nominal	3	Mininum edge distance determination.	A-6
2'x3'x3'	Nominal	3 & 4	Minimun edge distance and creep testing.	A-7
2'x4'x5'	Similar to a typical bent cap. (see Appendix A-8)	5	Two-bolt group direct tension.	A-8

ClibPDF - www.fastio.com

Forms for the concrete blocks were constructed from 3/4-inch plywood, and 2x4-inch and 2x6-inch Douglas fir boards. Concrete cylinders were formed by using 55-gallon steel drums; the drum containers were left around the hardened concrete following placement to provide additional support for the concrete. Where deformed steel reinforcing bars were used, these were tied in "cages", and set in the forms after the forms had been thoroughly sprayed with a release oil. Proper clearance between rebar and edges of concrete was obtained by using suitably sized mortar cubes as spacers.

b. Concrete Placing

Concrete blocks and cylinders were cast at various times throughout the research project.

The following values listed are ranges of the properties of fresh concrete which were measured during each pour:

- concrete temperature : 70° to 84°F
- slump (cone test) : 3 to 3 1/4 inches
- unit weight : 150.9 to 151.9 lbs/cu ft
- percent of air voids : 1 1/2%

Concrete was placed in three equal lifts, with each lift being vibrated thoroughly after placing. Hunts' concrete curing compound was sprayed on the top of all blocks to prevent water from evaporating. So that compressive strength could be determined, 6-inch-diameter x 12-inch-high concrete cylinders were made during each pour according to cylinder casting procedures in the California Department of Transportation Test Method No. 540-B.

ClibPDF - www.fastio.com

3. Installation of Rock Bolts

The wooden forms surrounding the concrete blocks were stripped after the concrete had cured for a period of from five to seven days. The top surface of each block was sandblasted to remove curing compound and 1 3/4-inch-diameter holes were drilled in the blocks to the desired depth with a diamond impregnated core drill. Following the drilling, the holes were cleaned out, then washed out thoroughly with water and allowed to dry.

After the holes were dry, either solid bar or hollow core rock bolts were installed. Prior to installing the rock bolts into the holes, the head assembly on each stud was expanded so that it would fit snugly into its respective hole. The studs with the head assemblies were installed at the prescribed depths. In order to grip and turn the rock bolt stud to expand the head assembly, a setting tool (see Figure 5) was screwed onto the top of each rock bolt stud and turned using a torque wrench. The proper amount of torque was applied to each stud as per manufacturer's recommendations; 250 foot-pounds of torque was applied to each hollow core rock bolt and 350 foot-pounds of torque was applied to each solid bar rock bolt. It was noted that while expanding the expansion shell head assemblies, bolts tended to move slightly from the center of the 1 3/4-inch-diameter hole while being torqued, so a steel collar was temporarily used to keep the bolts centered in the hole. The setting tool and collar were removed after the specified torque was achieved.

ClibPDF - www.fastio.com

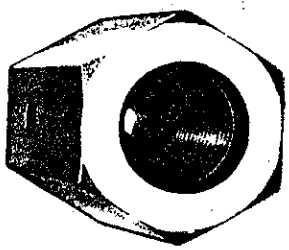

SPEED TYPE ROCK BOLT IMPACT TOOL

A long-life tool for expanding rock bolts. Short Title: "Rock Bolt Setting Tool."

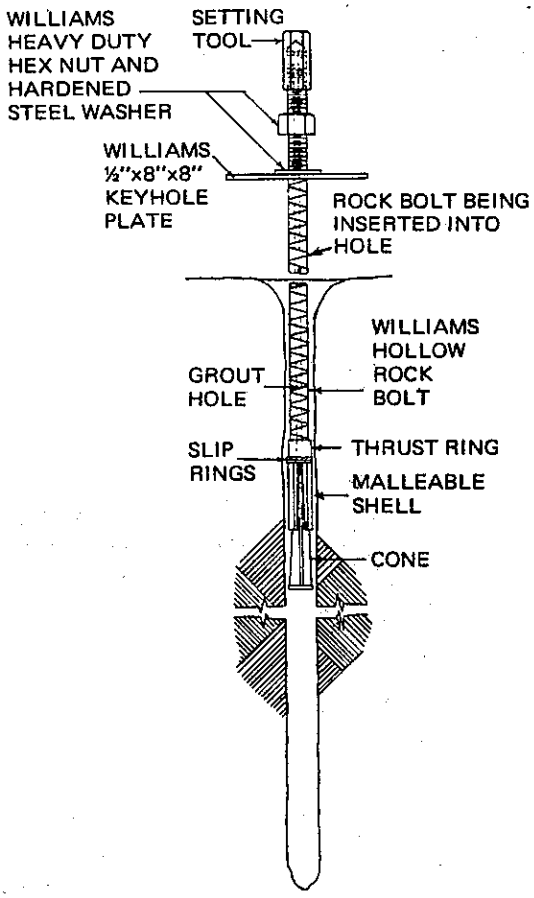

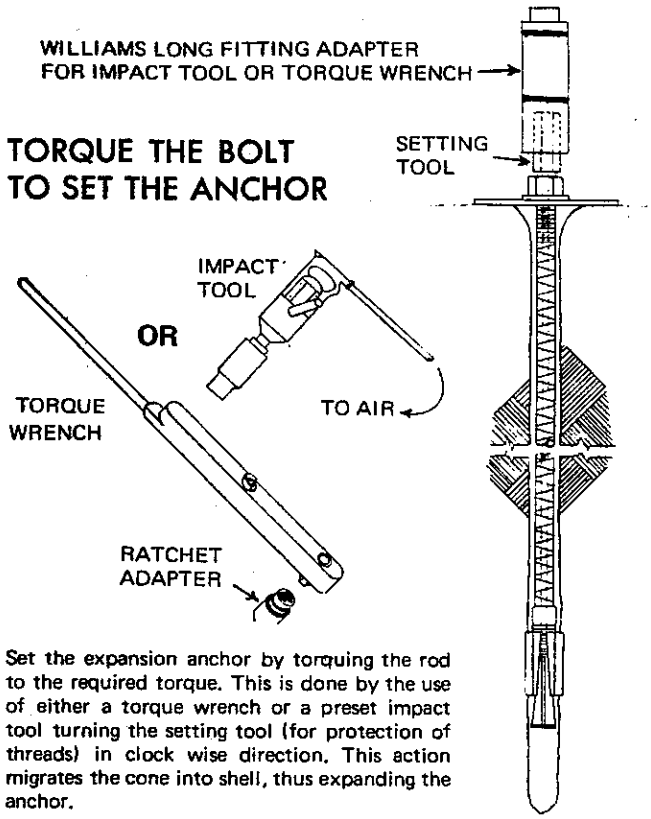

Set the expansion anchor by torquing the rod to the required torque. This is done by the use of either a torque wrench or a preset impact tool turning the setting tool (for protection of threads) in clock wise direction. This action migrates the cone into shell, thus expanding the anchor.

Figure 5 - The setting tool and its use in expanding the head assembly of rock bolts.

ClibPDF - www.fastio.com

The center of the grip or bearing area of the expansion shell on each head assembly on both long and short cone-and-shell systems was above the actual hole depth as shown in Figure 6.

After the head assemblies had been expanded by applying torque to the top end of the rock bolt studs, the void area around the studs and head assemblies was filled with bonding material. The types and methods of applications of bonding materials used in the research study are described fully in Section IV.B.1.b, page 21, of this report.

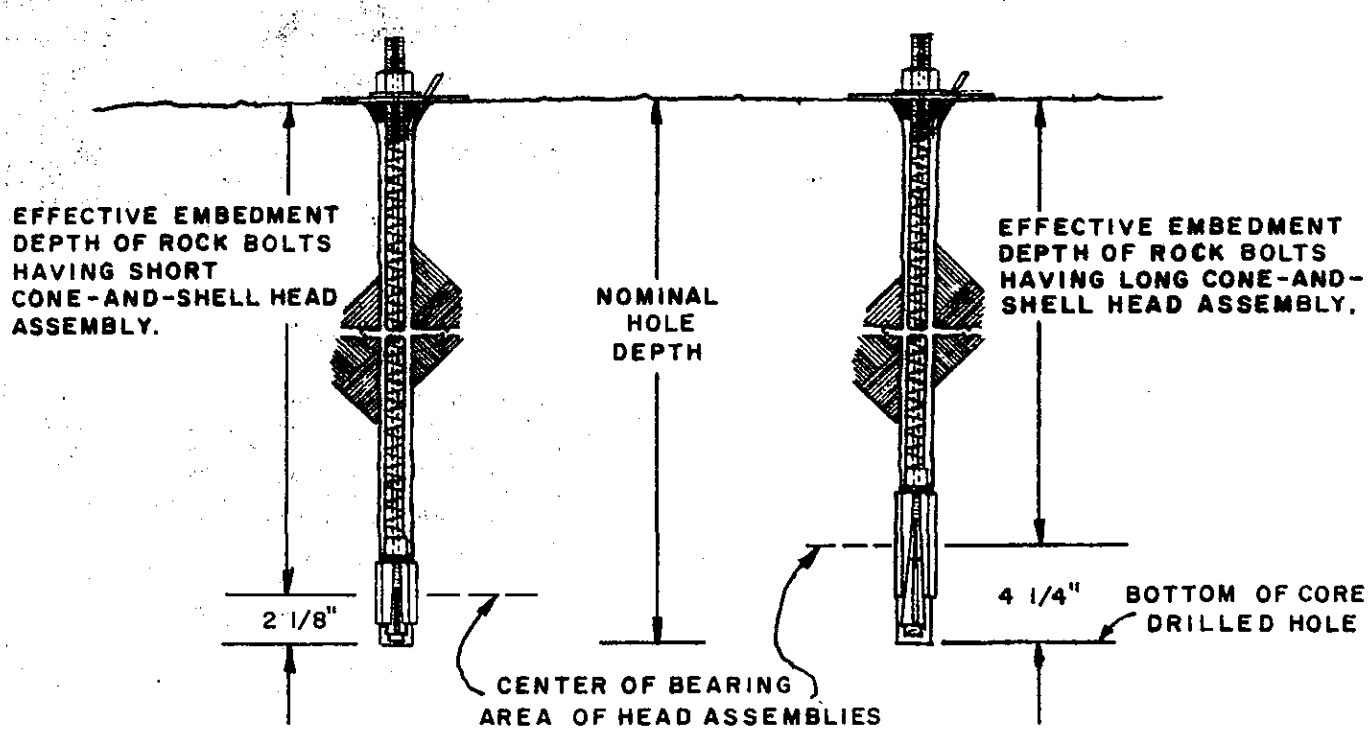

Figure 6 - Effective embedment depths of rock bolts utilizing (a) short cone-and-shell and (b) long cone-and-shell head assemblies.

ClibPDF - www.fastio.com

C. Testing Equipment and Procedures

1. Single Bolt Direct Tension Testing

A 1000 kip MTS universal testing machine was used to load the 1-inch-diameter rock bolt specimens in direct tension. In the initial testing setup, which is shown in Figure 7 and used briefly an Phase 1, two short "I" beam sections were used to support the blocks containing single rock bolts. Three blocks were tested using this method of support. It was noticed that this loading arrangement tended to load the block as a simply supported beam. This type of loading caused several radial cracks upon failure of the bolt system. To avoid this beam type loading a short section of 22-inch-diameter steel pipe was used to support the blocks and cylinders for the remainder of the direct tension testing (Figure 8) performed in Phases 1 and 2. The inside diameter of the pipe section was larger than the diameter of a typical concrete failure cone having a 45° failure angle.

Two linear motion potentiometers, one mounted on each end of a bracket, were used to measure the average movement of the bolt with respect to the face of the concrete block. The bracket was attached to the rock bolt shaft. A coupler sleeve welded to a pull bar was then threaded onto the top of the rock bolt stud.

Initially a 200-pound tensile preload was applied to each rock bolt. Bolts were then loaded in tension at a constant displacement rate of 0.1 inch per minute. The tests

ClibPDF - www.fastio.com

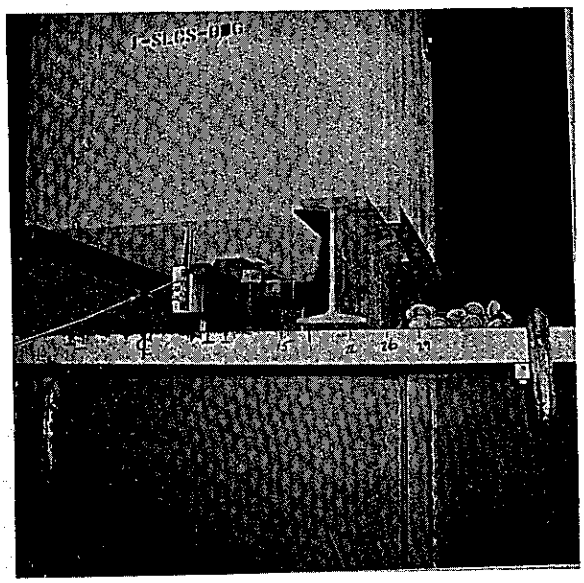

Figure 7 - Initial direct tension testing apparatus utilizing a pair of I beams.

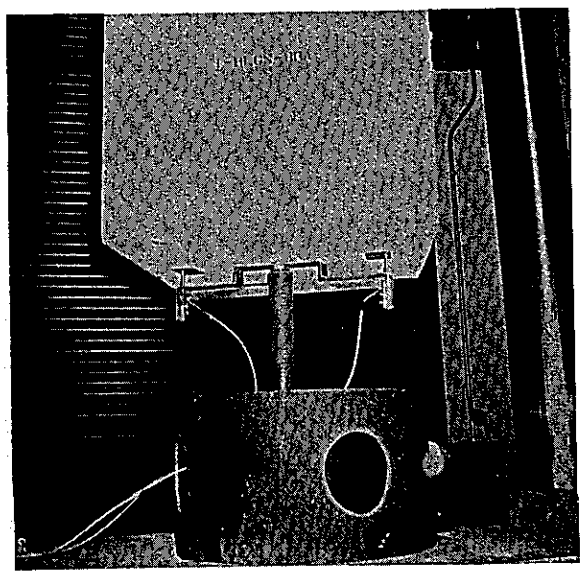

Figure 8 - Final direct tension testing apparatus utilizing a steel cylinder.

ClibPDF - www.fastio.com

were terminated when the bolt fractured or when excessive slip had occurred and the potentiometer arms were no longer in contact with the surface of the block. The movement of the rock bolt relative to the surface of the concrete was recorded on a 10-inch by 15-inch chart. The applied load was plotted along the Y axis and the relative bolt displacement was plotted along the X axis. The following information was recorded on the load-slip charts:

- Project designation
- Block designation
- Preload, Po
- Maximum load, P max
- Date and time of test
- Loading rate
- X and Y scale designation

2. Determination of Minimum Edge Distance by Torque Tests

In initial tests performed in Phase 3, the 1-inch-diameter rock bolts were installed close to the edges of concrete test blocks to determine if the concrete near edges of concrete foundations might be damaged by lateral pressures exerted by the expanded head assemblies of rock bolts. Torque values applied to the rock bolt studs were purposely applied slightly higher than those recommended by the manufacturer so as to simulate the high lateral loads which might be expected to occur in field installations. The torque on the rock bolt studs was measured using a calibrated torque wrench with a 500 foot-pound capacity. After the head assemblies had been expanded, the concrete near the hole and on the sides of the block was tapped with a hammer. Concrete that was not broken produced a "ringing"

ClibPDF - www.fastio.com

sound whereas concrete that was cracked produced a lower pitched sound or a "thud". To determine if any small cracks not visible to the naked eye were present, water was poured into holes around installed rock bolts. Any loss of water and damp areas on the outside of the concrete block were signs of the presence of such cracks.

Figure 9 shows an example where water, which had been poured into the drilled holes after rock bolts had been installed, had leaked out through the concrete while testing for small cracks caused by the lateral pressures of the expansion shell head assemblies.

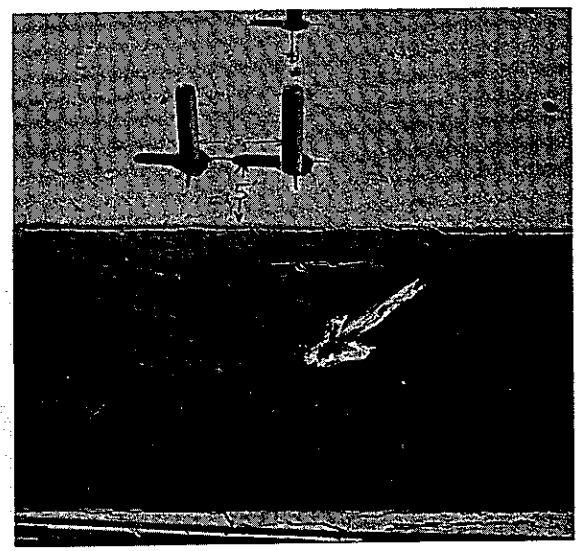

Figure 9 - Edge distance test specimen with water seepage denoting a previously undetected crack.

ClibPDF - www.fastio.com

3. Determination of Minimum Edge Distance By Direct Tension Tests

In the second part of the Phase 3 tests, pullout strengths of 1-inch-diameter rock bolts installed near corners of concrete blocks were measured to determine at what minimum edge distance the ultimate pullout strengths of the hollow core rock bolts could be developed.

A total of six pullout tests were performed on individual 1-inch-diameter grouted hollow core rock bolts having long cone-and-shell head assemblies, installed in opposite corners of three 3-foot x 3-foot x 2-foot deep nominally reinforced concrete blocks two rock bolts per block). Rock bolts were installed in 12-inch-deep core drilled holes at edge distances of 6, 8, and 10 inches. The testing apparatus was assembled, as shown in Figure 10. Tension was exerted on the bolts by a 120-kip-capacity hydraulic jack with a 1 1/8-inch-diameter pull rod coupled to the bolts. The load was measured by a 200-kip-capacity load cell together with a digital strain indicator instrument. The hydraulic jack was powered by an electrically driven hydraulic pump. The hydraulic jack was positioned on a beam made from two C12x30 channels which rested on four other beams, each made from two C3x5 channels. The two inside C3x5 channel beams underneath the C12x30 channels were situated 28 inches apart with the pull rod positioned exactly between them. By using this setup the hydraulic jack did not rest directly on the concrete, and any restraint around the rock bolt was avoided.

Additional beams and steel rods were employed (see Figure 10) to prevent the C3x5 channels from movement during testing.

ClibPDF - www.fastio.com

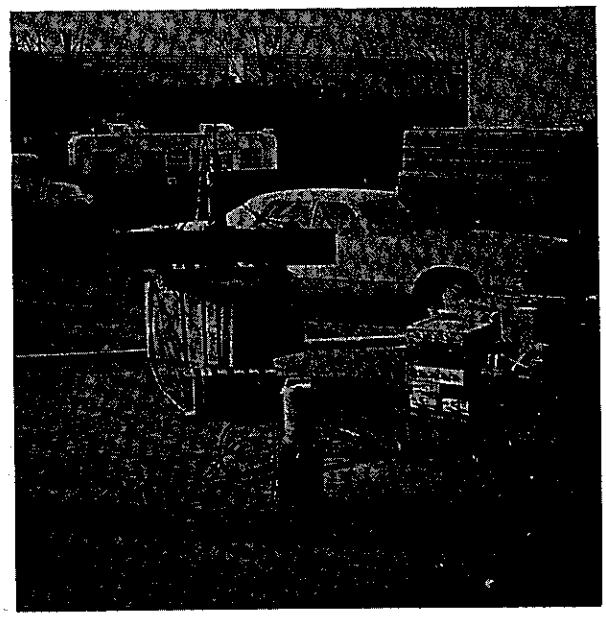

Figure 10 - Overall view of test apparatus for Phase 3 edge distance pullout testing.

Deflection of the rock bolts was measured using two potentiometers and an averaging circuit as shown in Appendix C. Both load and deflection were plotted on an X-Y recorder. A relatively slow loading rate of 0.05 inch per minute was used for all six tests. Peak pullout loads and loads at the slip point were read from the plots and recorded. Averaged readings for similar tests are listed in Table 8b, page 60.

In addition to the six pullout tests conducted in the corners of concrete blocks, further tests were made to determine pullout strengths of ungrouted 1-inch-diameter rock bolts installed near edges of concrete blocks. The reason for evaluating ungrouted rock bolt pullout strengths was to determine what portion of the total pullout strength is attributed to grout bond.

ClibPDF - www.fastio.com

Similar testing apparatus and procedures were used in the ungrouted rock bolt edge distance tests as were used in the corner edge distance tests (see Figure 11). Only ultimate pullout strengths of the rock bolts, however, were recorded. These are listed in Table 8c, page 62.

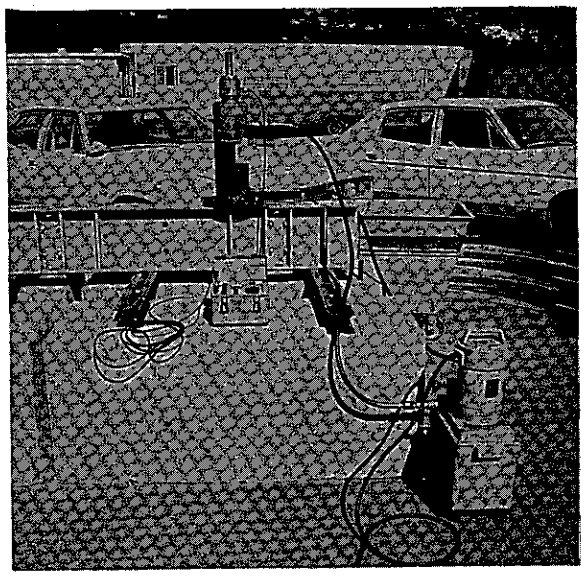

Figure 11 - Testing apparatus used to evaluate pullout strength of ungrouted rock bolts installed at various edge distances.

ClibPDF - www.fastio.com

4. Creep Testing

The testing frame used for the creep tests was the same one that was used for the Phase 3 edge distance pullout tests. Force was applied by tightening a nut on the pull bar until a load of 25 kips was reached. This load was maintained on the bolt for 100 hours using two railroad car under carriage springs. The load was measured by a 50-kip capacity load cell and a digital strain indicator instrument. The slip of the bolt was measured by two dial indicators. The testing apparatus is shown in Figure 12. The dial indicators were read every hour for the first 16 working hours, then were read three times a day for the remainder of the testing period. Individual indicator readings were recorded and then averaged.

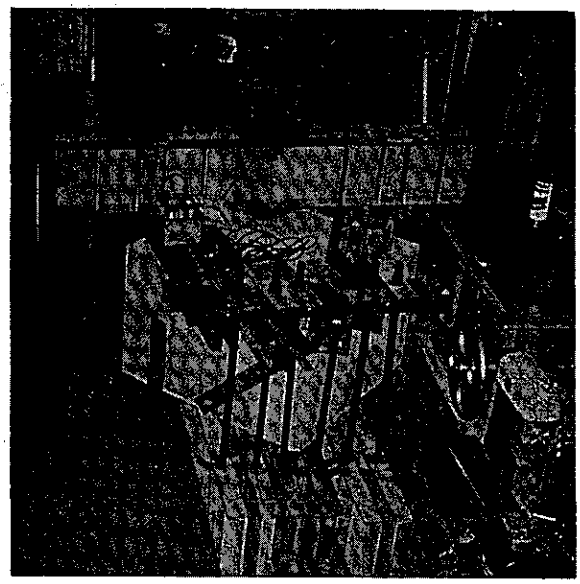

Figure 12 - Test setup for sustained loading creep tests.

ClibPDF - www.fastio.com

5. Two-Bolt Group Pullout Testing

The two-bolt group pullout tests were conducted in the same fashion as the single bolt direct tests with respect to instrumentation and testing machine control settings, except for the load range setting. A load range of from 0 to 200 kips was used in anticipation of larger maximum loads than were experienced in the single bolt tension tests.

The concrete blocks and test fixtures used, however, were entirely different than those used in other parts of the project. the concrete blocks for these tests measured 2 feet x 4 feet x 5 feet. The blocks were suspended from the upper crosshead of the testing machine (Figure 13) by six #11 deformed reinforcing steel bars cast in the concrete block (Figure 14). After a concrete block was bolted to the channel sections, a tension test fixture (Figure 15 and Appendix D) was raised and fastened onto the two embedded rock bolts. The tension fixture was connected to a 2-foot pull bar by a 2-inch-diameter pin. The rest of the testing procedure was the same as that used for direct tension testing performed in Phase 1.

6. Description of the Data Collection Methods

In all cases where pullout strengths of bonded rock bolts and threaded rods were determined, a continuous plot of both load and bolt deflection was made by a X-Y recorder on graph paper for each test conducted. A schematic diagram of the electrical circuitry for these tests is shown in Appendix C. From each individual plot, the

ClibPDF - www.fastio.com

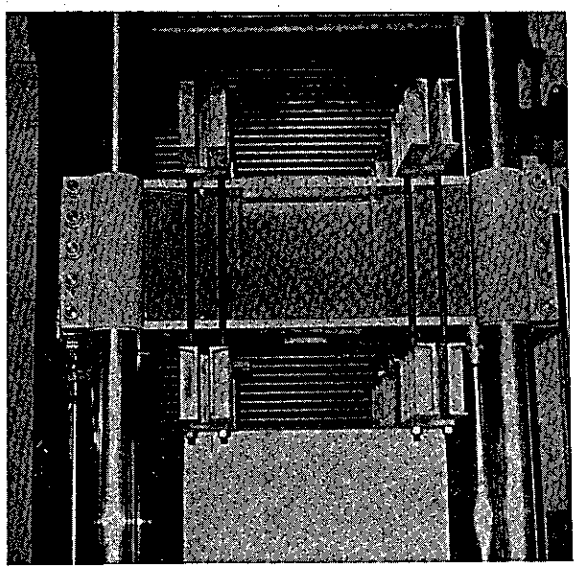

Figure 13 - Two-bolt group test showing block suspended from upper cross-head of testing machine.

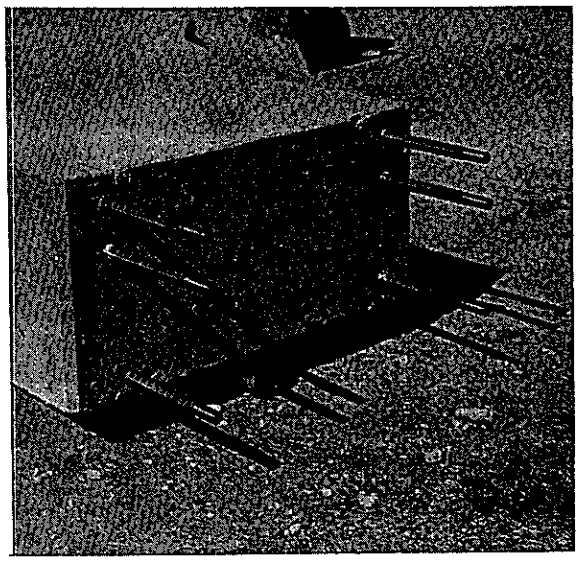

Figure 14 - Threaded No. 11 steel reinforcing bars used to suspend test blocks.

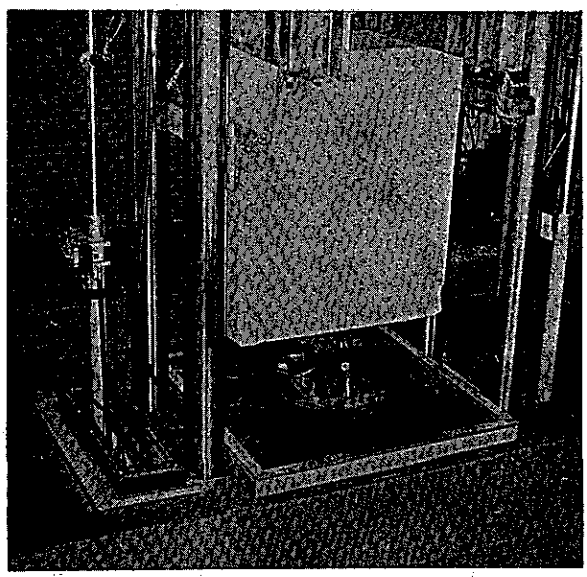

Figure 15 - Two-bolt group test apparatus showing block with loading fixture and pull bar attached.

ClibPDF - www.fastio.com

maximum load achieved was noted. Two identical tests were run for each loading condition. Maximum pullout loads for each different loading condition are presented in the various data summaries in Section IV.D.

In addition to the maximum pullout load, a point on the load-deflection curves, designated as the "slip point", was also noted, and included with most of the data. The slip point is defined as the point on the load-deflection curve, similar to the yield point on a stress-strain curve for steel, at which the relationship between bolt load and deflection ceases to be linear and elastic. The slip point load is important when determining allowable design loads.

D. Detailed Description of the Five Testing Phases

1. Phase 1 - Pullout Tests of Single Rock Bolts

In order to evaluate maximum pullout strengths and characteristics of the two types of rock bolts tested in this research project when the rock bolts are installed at unlimited edge distances, direct tension tests were conducted in this first testing phase using various types of grout and embedment depths from 8 to 14 inches.

In the first set of tests in Phase 1, sixteen unreinforced 2-foot-cubical concrete blocks as shown in Appendix A-1 were cast. In each block specimen, a 1-inch-diameter rock bolt was installed in a 1 3/4-inch-diameter core-drilled hole as per manufacturer's recommendations. Holes were positioned at the center of the top face of each block and were 8 inches deep. Two types of rock bolts; solid

ClibPDF - www.fastio.com

bar and hollow core groutable, two types of head assemblies; long and short cone-and-shell, and two different bonding agents; polyester resin and Wil-X cement grout, were tested. Two direct tension pullout tests were performed on each rock bolt-bonding system. In the first three pullout tests conducted in this initial set of Phase 1 tests, two "I" beam were used to support each block, as shown in Figure 7, page 36. At the conclusion of these three tests it was felt that the "I" beam supports caused the blocks to be loaded unduly in flexure and perhaps caused some cracking and loss of pullout load resulting from splitting tension. Consequently the remaining 13 specimens of this first set were supported using a short section of heavy walled steel pipe, as shown in Figure 8, page 36. This pipe provided a uniform bearing ring around the rock bolts. Pullout test results for the various systems are shown in Table 6a. All blocks developed cracks as a result of being unreinforced. Because of this, maximum loads measured were perhaps short of those attainable.

A second set of direct tension tests was conducted to determine what effect nominal steel reinforcement in the concrete blocks would have on rock bolt pullout strengths. The pullout strengths of hollow core rock bolts which previously appeared to be higher than the pullout strengths of solid bar rock bolts, were determined using sixteen lightly reinforced concrete blocks, whose dimensions and reinforcing are shown in Appendix A-2. The 2-foot cubical concrete blocks were cast, and 1-inch-diameter hollow core rock bolts were installed in both 8-inch and 12-inch-deep core-drilled holes using similar bonding systems as in the first set of tests whose results are shown in Table 6a. Two pullout tests were performed for each different head assembly type and grout combination, using the circular pipe bearing ring again during testing for even support.

ClibPDF - www.fastio.com

Table 6a - Results of initial rock bolt pullout tests in unreinforced concrete specimens.

Expansion shell head assembly	Type of bonding material	Solid bar rock bolts			Hollow core rock bolts		
		Curing time, days	Tensile load, kips**		Curing time days	Tensile load, kips**	
			At slip point	Maximum		At slip point	Maximum
Long cone-and-shell	Polyester resin	12	19.0 [16.5, 21.5]	31.8 [29.6, 33.9]	12	27.5 [30.0, 25.0]	43.6 [42.9, 44.3]
	Wil-X cement	12	16.0 [14.8, 17.1]	30.1 [24.7*, 35.6*]	9	27.8 [25.0, 30.5]	40.2 [38.7, 41.6]
Short cone-and-shell	Polyester resin	12	14.8 [16.0, 13.5]	29.8 [32.2, 27.3]	13	11.5 [11.5, 11.5]	25.9 [24.2, 27.7]
	Wil-X cement	7.5	20.4 [27.5, 13.2]	31.8 [34.9*, 28.7]	9	28.4 [29.7, 27.0]	42.2 [39.8, 44.6]

NOTES:
- All rock bolts were installed in 8-inch-deep holes diamond core-drilled in unreinforced concrete blocks (see Appendix A-1 for block details).
- *The first three tests of this series are denoted by asterisks and were performed using parallel "I" beams to support the unreinforced concrete block specimens. In the remainder of tests in the above series, a cylinderical steel sleeve was used for support during loading.
- Concrete compressive strength at time of testing was 4,000 psi.
- **Where loads are listed, the average load appears above and the individual test loads appear below in brackets.

ClibPDF - www.fastio.com

In eleven of the sixteen tests, load loss was caused by fracturing of the block, followed by a severe bolt slippage. In the remaining five specimens, four of which were bonded with Wil-X cement grout, the bolts broke. Results shown in Table 6b can be compared with those in Table 6a, for hollow core rock bolts installed at an 8-inch embedment depth. The addition of nominal steel reinforcement in the concrete seemed to cause an unexplained reduction in most of the loads at the slip point, and seemed to have a varied influence on maximum loads attainable. However, we are inclined to feel that this was due to the test variables involved and the small number of test specimens which were evaluated. We feel that if a greater number of tests were performed, we would find that if the reinforcing made any difference, it would tend to increase both the load at slip point and the maximum load. The increase in embedment depth of hollow core rock bolts, from 8 to 12 inches, resulted in a considerable improvement in pullout strengths, both at the slip point and ultimate load.

Results of two additional tests, which were conducted later in the research program to evaluate various types of bonding materials, may be compared with the pullout test results of rock bolts installed in 12-inch-deep holes, shown in Table 6b. The bonding material used in these two tests is called "Masterflow 713 Grout" (MF713) and is a mortar consisting of portland cement and a sand filler. Two rock bolts having long cone-and-shell head assemblies were bonded with MF713 grout into the top face of heavily reinforced concrete cylinders whose dimensions are shown in Appendix A-4. Both rock bolts were installed, one each into a 12-inch-deep hole in the center of the top face of two concrete cylinders. Grout used to bond the rock bolts

ClibPDF - www.fastio.com

Table 6b - Results of pullout tests of hollow core rock bolts installed in nominally reinforced concrete blocks at the hole depths of 8 and 12 inches.

Type of expansion shell head assembly	Type of bonding materials	Depth of holes					
		8 inches			12 inches		
		Curing time, days	Tensile loads, kips Average/[Individual]		Curing time, days	Tensile loads, kips Average/[Individual]	
			At slip point	Maximum		At slip point	Maximum
Long cone-and-shell	Polyester resin	13	16.6 [16.2,17.0]	28.9 [27.6, 30.2]	13	21.9 [16.2,27.6]	48.6(1)* [46.3,50.9]
	Wil-X	14	21.8 [20.0,23.5]	40.4 [38.2, 42.6]	15	35.1 [33.0,37.2]	50.6(2) [50.3,50.9]
Short cone-and-shell	Polyester resin	13	15.1 [14.0,16.2]	32.7 [31.8, 33.7]	14	33.8 [32.4,35.3]	46.6 [43.8,49.5]
	Wil-X cement	15	16.8 [13.5,20.0]	39.5 [33.0, 46.1]	14	38.8 [38.5,39.0]	51.7(2) [50.9,52.5]

NOTES:
- All holes were core-drilled and 1-3/4 inches in diameter.
- Details of concrete blocks used in above tests are shown in Appendix A-2.
- *(n) = Number of test specimens in which bolt tensile failure occurred.

ClibPDF - www.fastio.com

in these two tests was cured 31 days before testing. The mean maximum pullout load for the two tests was 53.8 kips. At the peak loads, the rock bolts broke in both tests. The mean slip point load for the two tests was 38.8 kips. Results of these two tests are similar to those shown in Table 6b in which rock bolts were installed in 12-inch-deep holes and Wil-X cement grout was used.

A third series of rock bolt pullout tests was conducted for two reasons. It was desirable to find an acceptable alternate grouting material equal to or better than the Wil-X cement grout which was previously found to be satisfactory when used with hollow core rock bolts. The second reason was to supplement results of previous pullout tests done at hole depths of 8 and 12 inches.

In this third series of tests, a total of fourteen concrete cylinders was used. Both reinforced and unreinforced concrete cylinders were used. This was not intentional but occurred because some extra cylinders previously cast were available and it was desirable to conduct additional tests. A single hollow core rock bolt having a long cone-and-shell head assembly was installed in the center of the top face of each concrete cylinder (see details in Appendices A-4 and A-5. Tests were performed at two different hole depths, 10 and 14 inches.

Results of pullout tests conducted on hollow core rock bolts installed in 10-inch and 14-inch-deep holes are shown in Table 6c.

It is apparent from results of pullout tests performed in this third series and the previous second series that:

1) Of those bonding materials tested, none performed as well as Wil-X cement grout.

ClibPDF - www.fastio.com

Table 6c - Results of pullout tests of rock bolts installed in holes 10 and 14 inches deep and bonded with various materials.

Hole depth, inches	Type of bonding material	Curing time, days	Tensile*** load, kips		Failure Mode
			At slip point	At maximum	
10	Wil-X cement grout	3.5	28.9 [24.8,33.0]	53.6 [53.5,53.7]	Bolt break(2)**
	Wil-X* cement grout	5	28.3 [26.6,30.0]	41.6 [40.9,42.4]	Radial cracking of concrete block/ bolt pullout
	Master* Flow 713	10	29.6 [24.9,34.2]	38.9 [32.1,45.7]	Concrete cone/ bolt pullout
14	Wil-X cement grout	3.5	36.0 [36.0,36.0]	57.2 [55.8,58.5]	Bolt break(2)
	Embeco 153	2	27.7 [22.4,33.0]	54.8 [52.3,57.4]	Bolt break(2)
	Burke's Non-shrink	6	21.3 [10.0,32.6]	48.0 [43.7,52.3]	Bolt break(1) Grout-concrete bond failure
	Unbonded*	---	10.6 [10.0,11.2]	35.5 [29.9,41.1]	Radial cracking of concrete block/ bolt pullout

NOTES:

- All rock bolts tested in this series were of the hollow core type and had long cone-and-shell head assemblies.
- *Asterisk denote specimens which were unreinforced concrete cylinders (see Appendix A-5). Dimensions and reinforcing details of other above specimens tested are shown in Appendix A-4.
- All holes were core-drilled and were 1 3/4 inches in diameter.
- **(n) = number of specimens in which bolt fracture occurred.
- ***Where tensile loads are listed, the average load appears above and the individual test loads are shown below it in brackets.

ClibPDF - www.fastio.com

2) In pullout tests performed on rock bolts grouted with Wil-X cement in 12-inch and 14-inch-deep holes, both the average slip point loads and maximum pullout loads were high. In the tests performed at a 10-inch embedment depth, ultimate loads were as high; however, the slip point loads were approximately 20 percent lower than those obtained at the 12-inch embedment depth.

3) The presence of any of the bonding materials tested increases both the slip point load and maximum pullout load of the rock bolt considerably.

2. Phase 2 - Pullout Tests of Threaded Steel Rods at a 24-Inch Embedment Depth

Initially, four pullout tests were conducted on 1-inch-diameter threaded steel rods installed in 24-inch-deep core-drilled holes, 1 3/4 inches in diameter. The rods were manufactured from steel conforming to requirements an ASTM Specifications A307 and A449 (two rods of each). Concrete, cast in four 55-gallon steel drums, was heavily reinforced using spiral steel wire (see Appendix A-3). ROC-LOC, a polyester resin, was used to bond the threaded rods in the holes in the concrete and was cured for three days after placing. It was felt that since ROC-LOC polyester resin was manufactured specifically for installing rock bolts into drilled holes, it would be an excellent material to use for bonding the threaded rods. Although this procedure was later found to be unnecessary if holes were cored and flushed with water during the drilling operation, holes were scrubbed with a bottle brush and water to maximize bond between the resin and concrete, then allowed to air dry prior to placing resin.

Results of initial pullout tests are shown in Table 7a.

ClibPDF - www.fastio.com

Table 7a - Results of pullout tests of threaded rods.

Type of steel in threaded rods	Number of tests	Tensile loads, kips*	
		At slip point	At maximum
ASTM A307	2	18.1 [14.2, 22.0]	23.6 [14.2, 32.9]
ASTM A449	2	13.4 [14.1, 12.6]	13.4 [12.6, 14.1]

NOTES:
- All bars bonded with "ROC-LOC" polyester resin.
- All holes were 1 3/4 inches in diameter and 24 inches deep.
- Details of dimensions of reinforced concrete cylinders used in all above tests are shown in Appendix A-3.
- *Where tensile loads are listed, the average load appears above and the individual test loads are shown below it in brackets.

The bond between the resin and concrete failed in each of the four pullout tests and resulted in generally low pullout strengths.

Four additional pullout tests performed on deeply embedded threaded rods (see Table 7b) were conducted to determine if maximum pullout strengths of rods could be improved by using a polymer concrete.

Also, hole diameters were reduced from 1 3/4 inches to 1 1/4 inches to see if pullout strengths of bars could be improved by reducing the volume and consequently the shrinkage of bonding materials. Four 55-gallon steel drums were used as forms, and concrete was reinforced as shown in Appendix A-4. Curing time for both bonding materials are shown in Table 7b.

ClibPDF - www.fastio.com

Table 7b - Results of pullout tests of ASTM A449 threaded rods bonded with polyester resin and polymer concrete.

Type of bonding material	Curing time, days	Number of tests	Tensile load, kips: At slip point	Average [Individual] At maximum	Failure mode
ROC-LOC polyester resin	2	2	22.2 [18.0, 26.5]	37.2 [18.5, 55.9]	Resin-concrete bond
Polymer concrete	3	2	19.3 [16.1, 22.5]	57.2 [54.2, 60.3]	Concrete-grout bond

NOTES:
- All holes were 1 1/4 inches in diameter and 24 inches deep.
- All rods in above tests were 1 inch in diameter and were threaded their entire length with 1-8 UNC threads.
- Details and dimensions for reinforced concrete cylinders used in all above tests are shown in Appendix A-4.

Test results shown in Tables 7a and 7b indicate that lack of bond and excessive rod slippage were problems present with both the polyester resin and polymer concrete bonding systems.

Four additional pullout tests were performed on A449 threaded steel rods to determine whether by using a suitable epoxy, approved by the California Department of Transportation, the magnitude of the tensile load on the threaded rods at the slip point could be significantly increased. It was felt that by extending the curing time for all specimens to approximately one month, bond strength might be substantially improved. Large cylinders made of concrete and reinforced with a steel cage as shown in Appendix A-4 were cast. Results of tests are shown in the following Table 7c.

ClibPDF - www.fastio.com

Table 7c - Results of pullout tests of ASTM A449 threaded rods bonded with polyester resin and epoxy.

Type of bonding material	Curing time, days	Number of tests	Tensile load, kips: Average [Individual]		Failure mode
			At slip point	At maximum	
Epoxy: Calif.State Spec.8040-61J-03	27	2	40.00 [40.0, 40.0]	62.1 [61.3, 62.8]	Tensile failure of threaded rod
ROC-LOC polyester resin	31.5	2	8.5 [6.0, 11.0]	60.6 [60.2, 61.0]	

NOTES:
- All holes were 1 1/4 inches in diameter and 24 inches deep.
- All rods in above tests were 1 inch in diameter and were threaded their entire length with 1-8 UNC threads.
- Details and dimensions of reinforced concrete cylinders used in all above tests are shown in Appendix A-4.

Test results presented in Table 7c indicate that threaded rods bonded with epoxy (California State Specification No. 8040-61J-03) performed satisfactorily, producing high loads at the slip point as well as at the maximum pullout strength. ROC-LOC polyester resin, on the other hand was found to be unacceptable for bonding threaded rods even when the curing time was increased to one month, as the loads at the slip points were extremely low.

ClibPDF - www.fastio.com

3. Phase 3 - Testing to Determine Minimum Edge Distance

The first series of tests in Phase 3 were performed to determine if high initial installation torques required to expand the head assemblies on the rock bolts would cause cracking of the concrete when rock bolts are installed near edges or corners of concrete blocks.

Four concrete blocks, each 2-feet wide x 4-feet 10 inches long x 2 feet deep, were constructed and used in the 20 initial edge distance tests. All holes were core-drilled 1 3/4 inches in diameter and 14 inches deep. The centers of all holes were between 4 and 8 inches from the edges of the blocks at all corners and near the edges, installed along the 5-foot sides of the blocks. One-inch-diameter rock bolts having long cone-and-shell head assemblies were installed in these holes. A maximum torque value of 250 foot-pounds was recommended by the manufacturer to expand the head assemblies on the hollow core rock bolts. In order to determine what effect over-tightening the rock bolts during installation might have on the soundness of concrete near block edges, 350 foot-pounds of torque was used for the hollow core rock bolts installed at 4-inch and 5-inch edge distances. This increased torque causes lateral forces which are higher than those normally present on concrete surfaces around the bottom of the drilled holes. To facilitate checking for spalled or cracked concrete, rock bolts in this test series were not grouted. It was felt that the grout, normally used to fill voids around the rock bolt studs, might seal subsurface cracks which would otherwise be detected by tapping concrete with a hammer. At edge distances of both 4 and 5 inches, spalling of the concrete did occur when torque was applied to the bolts.

ClibPDF - www.fastio.com

With the detection of cracking of concrete around the rock bolts installed at edge distances of 4 and 5 inches, it was felt that the torque value of 350 foot-pounds was too severe, and a torque of 250 foot-pounds, as recommended by the rock bolt manufacturer, was used for the remaining installations.

Results are shown in Table 8a. Based on results from this test series, a minimum edge distance of 6 inches was used in succeeding edge distance tests.

ClibPDF - www.fastio.com

Table 8a - The effect of high installation torques and close edge distances on concrete soundness around unbonded rock bolts.

Edge distance, inches	Installation torque, ft-lbs	Effects of installation torques applied to rock bolt head assemblies on concrete soundness	
		In corner of block	Along edge of block
4	350	Cracking of concrete at 220 ft-lb (1) No cracking of concrete at 350 ft-lb (1)	Cracking of concrete at 300 ft-lb (1) cracking of concrete at 350 ft-lb (1)
5	350	No cracking of concrete at 350 ft-lb (2)	Slight cracking of concrete at 350 ft-lb (1) No cracking of concrete at 350 ft-lb (1)
6	250	No cracking of concrete (2)	No cracking of concrete (2)
7	250	(2)	(2)
8	250	(2)	(2)

NOTES:

- All hollow core rock bolts in above test are ungrouted.
- Details and dimensions of reinforced concrete blocks used in all above tests are shown in Appendix A-6.
- Holes for above rock bolt installations were 14 inches deep and 1 3/4 inches in diameter.
- (2) = Number of tests

ClibPDF - www.fastio.com

Six additional pullout tests were performed using three 3-foot x 3-foot x 2-foot-deep nominally reinforced concrete blocks to determine actual pullout values of the rock bolts as would be installed near the corner of a concrete base. Two rock bolts were installed at each of the three edges distances tested: 6, 8, and 10 inches. All rock bolts were installed in 12-inch-deep core-drilled holes and were bonded with Wil-X cement grout prior to conducting pullout tests.

The results of these tests are shown in Table 8b. The high maximum tensile pullout loads recorded indicate that the full tensile strength of the 1-inch-diameter hollow core rock bolts can be achieved at a block corner with edge distances as small as 6 inches.

ClibPDF - www.fastio.com

Table 8b - The effect of close edge distances at corners of concrete blocks on pullout strengths of grouted rock bolts.

Test No.	Rock bolt type	Rock bolt location in corner as shown:	Grout curing time, days	Tensile load, kips Average/[Individual] At slip point	At maximum	Failure mode
1	Williams hollow core rock bolts installed with long cone- and shell head assemblies installed at 250 ft-lb	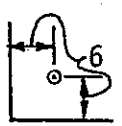 6 in.	19	38.8 [37.5,40.0]	60.2 [62.2, 58.2]	Bolt tensile failure
2			18			Concrete & bolt pullout
3		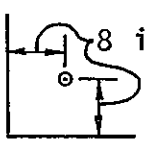 8 in.	14	33.5 [28.0,39.0]	58.2 [55.0, 61.3]	Bolt tensile failure
4			13			Bolt tensile failure
5		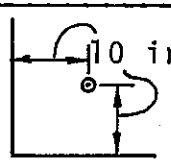 10 in.	One block not tested	53.0*	55.0	
6			32			Bolt tensile failure

NOTES:

- All rock bolts grouted with Wil-X cement grout.
- All rock bolts were 1 inch in diameter and were threaded on both ends with 8-UNC threads.
- All holes in the concrete blocks were 1 3/4 inches in diameter and 12 inches deep.
- *Before conducting this pullout test, a creep test was performed on this rock bolt. (see page 63)
- Details and dimensions of reinforced concrete blocks used in all above tests are shown in Appendix A-7.

ClibPDF - www.fastio.com

Besides the six pullout tests conducted on rock bolts installed in corners of concrete blocks, further pullout tests were made on ungrouted rock bolts installed near edges of nominally reinforced concrete blocks. As previously explained in Section IV.C.3 (page 40) of this report, these additional tests were conducted to determine what portion of the total pullout strength might be attributed to the bond strength of the grout.

As can be seen from results shown in Table 8c, high pullout loads averaging 30 kips were obtained with these ungrouted rock bolts installed at edge distances of only 6 inches in the corner of a concrete block. It may be concluded then that when such rock bolts are installed in a hole 14 inches deep and at a 6-inch edge distance, approximately 50 percent of the maximum pullout strength is provided by the mechanical grip of the expanded head assembly, while the remaining 50 percent of the pullout strength is provided by the expansive cement grout.

ClibPDF - www.fastio.com

Table 8c - The pullout strengths of ungrouted hollow core rock bolts near edges of concrete blocks.

Edge distance, inches	Maximum tensile load on rock bolts, kips: Average/[individual]	
	In a corner of block	Along edge of block
5	-	22.8 [19.5, 26.0]
6	30.3 [33.5, 27.0]	20.0 Anchor slipped at 5.0 [5.0, 35.0]
7	35.5 [34.0, 37.0]	-
8	44.0 [43.0, 45.0]	-

NOTES:
- All rock bolts in above tests were installed in 14-inch-deep holes, and were ungrouted.
- Details and dimensions of reinforced concrete blocks used in all above tests are shown in Appendix A-6.
- - = indicates no tests

ClibPDF - www.fastio.com

4. Phase 4 - Creep Testing

To determine if there was excessive creep of rock bolts installed at 12-inch embedment depths and subjected to a sustained tensile load, a single rock bolt was installed at the corner of a concrete block at a 10-inch edge distance and a 12-inch embedment depth. A 25-kip load level was chosen for the creep test. This represents a maximum design load which would be used for a 1-inch-diameter hollow core rock bolt, and is approximately 50 percent of the ultimate bolt pullout strength and 70 percent of the slip point load or elastic limit. The concrete test block used is shown in Appendix A-7. The 1-inch-diameter rock bolt having a long cone-and-shell head assembly was grouted with Wil-X cement grout according to the manufacturer's instructions. It was cured for a total of 30 days (during the initial 7 days of curing wet rags were used) prior to testing for excessive creep. The creep testing procedure is described in Section IV.C.4 (page 42) Test Procedures, of this report. After 100 hours of testing using a 25-kip sustained tensile load, the bolt had moved only 0.002 inch, a negligible amount. This distance was measured from the surface of the concrete block to a point on the rock bolt stud, approximately 1 inch above the concrete surface. A graph showing the creep rate is shown in Figure 16.

Following the 100-hour creep test, the bolt was pulled in direct tension to determine the maximum tensile load. Initially, a 300-pound preload was applied to the rock bolt. At the slip point load, 53.0 kips, a bolt deflection of 0.03 inch was measured. The maximum load recorded was 55.0 kips and the deflection at that load was 0.12 inch.

ClibPDF - www.fastio.com

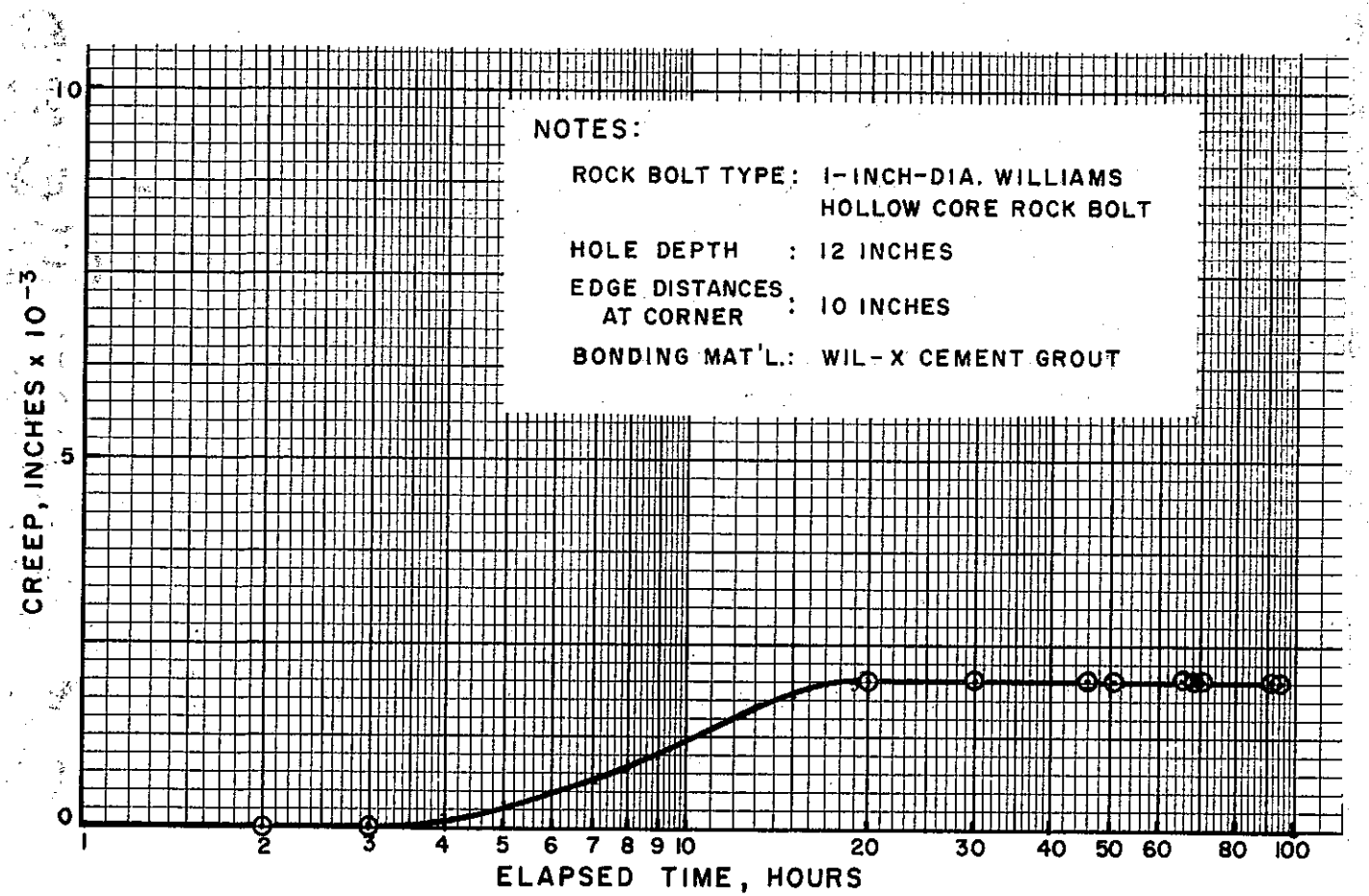

Figure 16 - Creep rate of a single rock bolt loaded with a 25-kip sustained load for 100 hours.

ClibPDF - www.fastio.com

5. Phase 5 - Two-Bolt Group Pullout Testing

The purpose of these tests was to determine what effect the closeness of rock bolts to one another has on their combined pullout strengths. A total of four pullout tests were conducted. In two of the tests, the spacing between the pair of rock bolts was 6 inches, and for the other two tests the spacing was 12 inches. All rock bolts were installed in 1 3/4-inch-diameter core-drilled holes having a constant depth of 12 inches and at a 6-inch edge distance. In each of the four tests, the 1-inch-diameter hollow core rock bolts were equipped with long cone-and-shell head assemblies and were bonded with Wil-X cement grout.

The results of the two-bolt group testing of rock bolts are given in Table 9. The concrete failed in all blocks in what may be described as a cone failure. This type of failure had not occurred before in this research study. It can probably be attributed to the overlap of the resulting conical stress zones in the concrete. Thus it is recommended that appropriate reduction factors be applied to pullout values of individual rock bolts when they are installed in a group and spaced closer than twice the depth of the expansion head assembly.

A typical plot of load versus deflection is shown in Figure 17 for one of the two-bolt group tests.

ClibPDF - www.fastio.com

Table 9 - Results of two-bolt group pullout testing.

Specimen No.	Grout curing time, days	Distance between bolts	Load at slip point,** kips	Deflection at slip point, inches	Ultimate load,** kips	Deflection at ultimate load, inches	Failure mode
1	9	6 in.	71.0	0.01	80.4	0.02	Concrete cracking and spalling
2	6		[70.0,72.0]	0.04	[76.5,84.3]	0.07	
3	8	12 in.	67.0	0.02	84.5	0.07	
4	9		[64.0,70.0]	0.02	[80.9,88.1]	0.05	

NOTES:
- Hole depth for all bolts = 12 inches.
- Edge distance to concrete = 6 inches.
- Hollow core rock bolts with long cone-and-shell head assembly.
- Wil-X cement grout used for all rock bolts.
- Details and dimensions of reinforced concrete blocks used in above tests are shown in Appendix A-8.
- **Where loads are listed, the average load appears above and the individual test loads are shown below it in brackets.

ClibPDF - www.fastio.com

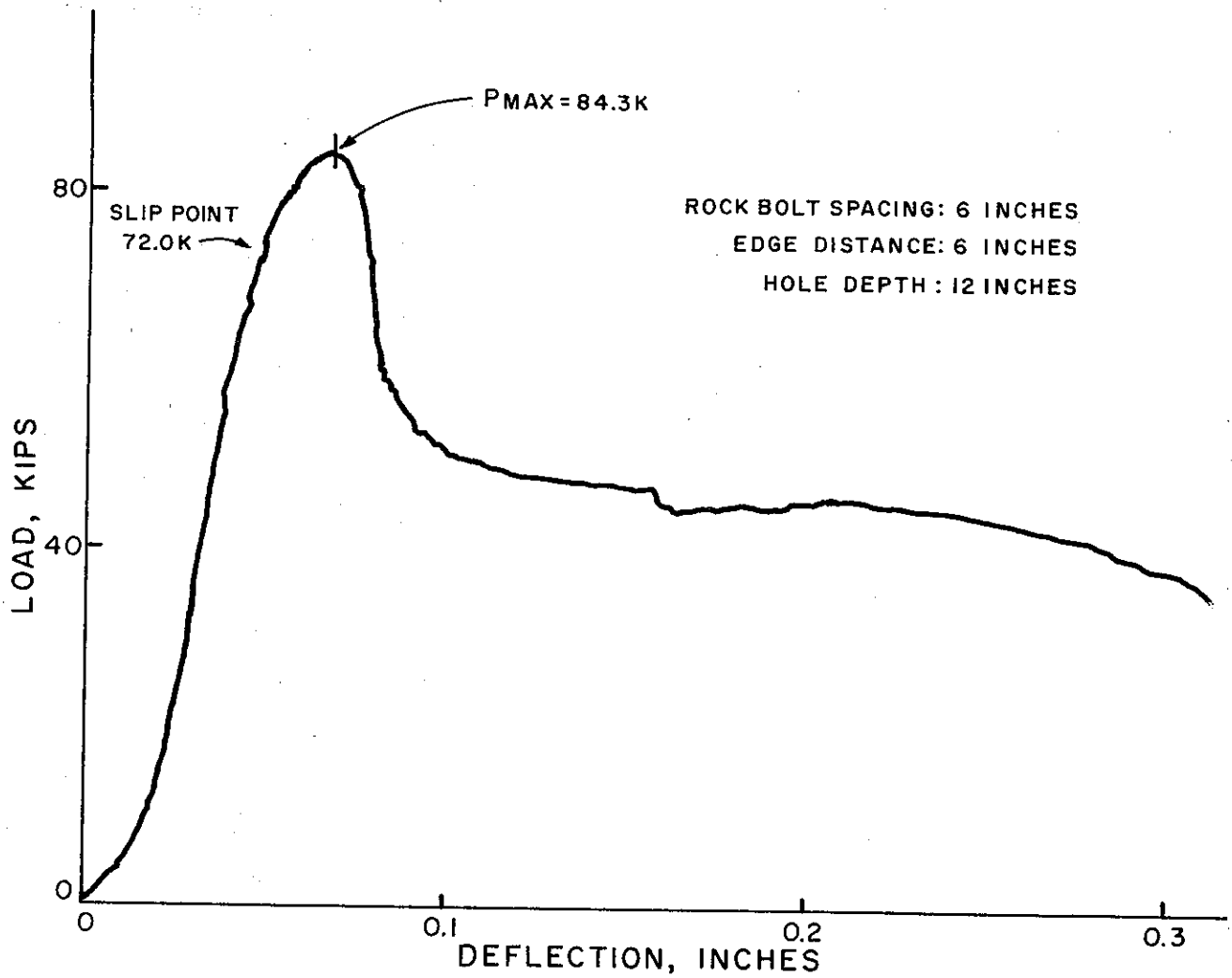

Figure 17 - Typical load-deflection curve for a pair of hollow core rock bolts tested in direct tension.

ClibPDF - www.fastio.com

V. TEST RESULTS AND ANALYSES

A. General Comments

Results of the variety of tests conducted on the rock bolts having expansion shell head assemblies are very promising. The hollow core rock bolts, as tested in this research project and bonded using Wil-X cement grout, performed well under static, direct tensile load conditions, and at distances to the edge of concrete blocks as small as 6 inches. Discussions of the effects of important parameters on performance of the rock bolts follow in Sections V.B. through V.H. of this report (pages 68 through 77).

It should be emphasized that only pure tensile loads were applied to rock bolts in this testing program. It is uncertain what effect high shear loads or combined shear and tensile loads applied to such rock bolts installed at small distances from the edge of concrete foundations will have on minimum recommended edge distance. Also the effects of cyclic loading on shallowly embedded rock bolts is uncertain.

B. The Effect of the Type of Anchorage Device on Pullout Strength

1. A307 and A449 Threaded Rods

All threaded steel rods in this research project were installed using various types of bonding materials and in core-drilled holes 24 inches deep. The bonding materials included (1) ROC-LOC polyester resin, (2) polymer concrete, and (3) epoxy meeting Caltrans State Specification 8040-61J-03.

ClibPDF - www.fastio.com

Low pullout strengths, especially at the slip point, occurred in all tests where polyester resin was used as the bonding material. In pullout tests performed where polymer concrete was used as a bonding material, the load at the slip point was also low, and a loss in bond between the two concretes caused failure at the higher tensile load. The threaded bars bonded with epoxy performed very well. The average slip point, 40.0 kips, was high. The average maximum pullout load was 62.0 kips at which the threaded rods broke in both cases.

2. Williams Rock Bolts

a. Solid Bar Rock Bolts With a Long or Short Cone-and-Shell Head Assembly.

The solid bar rock bolts were tested only briefly at the beginning of this project. Since pullout strengths were relatively low and the manufacturer has recommended not to use these solid bar rock bolts for permanent installations, their testing was discontinued.

b. Hollow Core Rock Bolts

The hollow core rock bolts were initially tested using both long and short cone-and-shell head assemblies. Following initial pullout tests it was decided that testing of only the long cone-and-shell head assemblies should be continued. This would eliminate one additional test variable and reduce the potential size of the research program considerably. Because the bearing surface area of the malleable shell of the long cone-and-shell head assembly is nearly twice that of the short cone-and-shell head assembly, it was felt that at shallow embedment depths, the long head assemblies would distribute the lateral loads to the adjacent concrete better than the short head assembly.

ClibPDF - www.fastio.com

C. The Effect of the Type of Steel Used for Rock Bolts on Service Life

The quality of steel used in manufacturing anchorage devices has been deemed to be critical when fatigue loading is present and when a long service life is considered important. Such properties as chemical composition, toughness, and tensile strength of such steel should conform to close limits to insure that the rock bolts and threaded rods will last when subjected to fatigue loading. The specifications of the steel used in the rock bolts as tested in this research project (see Appendix E) are not in agreement with those currently required by Caltrans for anchor bolts. Presently California Department of Transportation Standard Specifications Section 56-1.02C require that anchor bars for sign foundations shall conform to the specifications of ASTM Designation: A307.

It is recommended that if rock bolts are to be used as anchor bars for sign structures, lighting standards, or other strucutral uses involving fatigue loadings, the steel used when manufacturing the rock bolt studs should meet the requirements of either ASTM Designation: A706, a bendable weldable rebar, or a similar material with the same degree of structural competency as provided by currently specified anchor bars.

ClibPDF - www.fastio.com

D. The Effect of the Type of Bonding Material on Rock Bolt Pullout Strength

In an attempt to find an alternate bonding material other than Wil-X cement grout, which would easily seal voids around groutable hollow core rock bolt studs and provide equal or better pullout strengths, a variety of bonding materials were tested. Most of them were examined in the third series of single rock bolt pullout tests conducted in the first phase of testing (see Table 6c, page 51). The following bonding materials were examined:

- ROC-LOC polyester resin
- Master Flow 713
- Embeco 153
- Burke's non-shrink grout

As can be seen from results presented in Table 6a, 6b, and 6c, (Section IV.D.1, pages 47, 49, and 51 respectively) none of the alternate bonding materials performed as well as Wil-X cement grout.

In general the polyester resin grout was messy to handle, costly and impossible to pump using small hand operated equipment. In addition the shelf life of this material is limited and uncertain. It is a two component system, and requires careful measuring and thorough mixing. It has a short pot life, and only small quantities can be mixed and used at one time. The tensile load at the slip point provided by the resin is considerably lower than that for Wil-X cement grout as shown in Table 6b.

The other bonding materials tested were not as effective as Wil-X cement grout, and did not produce as high a tensile load at either the slip point or at the pullout load.

ClibPDF - www.fastio.com

Ungrouted hollow core rock bolts, installed with long cone-and-shell head assemblies, exhibited much lower slip points and ultimate pullout loads as seen in Table 6c (page 51).

E. The Effect of Edge Distance on Rock Bolt Pullout Strength

In Phase 3 of this research, testing was performed to determine at what minimum edge distance the maximum pull-out values of hollow core rock bolts fitted with long cone-and-shells could be obtained. A corner installation was deemed to be the most critical condition which would be encountered. In initial tests cracking of concrete was observed in the base concrete at both 4-inch and 5-inch edge distances upon applying torque to the rock bolt studs to expand the head assembly during installation of the rock bolt. It was found that such rock bolts installed 6 inches from the corner of a concrete block and grouted in a 12-inch-deep hole would develop the full tensile strength of the stud when loaded in direct tension. The average slip point value for rock bolts installed at this edge distance was found to be 38.7 kips, computed from results shown in Table 8b (page 60).

Although the full tensile strength of the rock bolt systems as tested was developed at a 6-inch edge distance, it is important to remember that the bolts tested in this research project were not subjected to any cyclic loading or combined shear and tensile loading. Also only long cone-and-shell head assemblies were tested. The effects of a more concentrated lateral load exhibited by the short cone-and-shell head assembly may somewhat increase the minimum edge distance required to develop the full tensile strength of the rock bolt without causing cracking in the concrete. If any installations are planned where such loading conditions or the use of short cone-and-shell head assemblies at minimal edge

ClibPDF - www.fastio.com

distances are expected, it is suggested that further tests be conducted to determine if any increase in edge distance is necessary.

F. The Effect of the Hole Depth on Rock Bolt Pullout Strength

With hollow core rock bolts installed in core-drilled holes in reinforced concrete blocks, tensile loads at the elastic limit and the maximum pullout strengths varied according to the hole depth. Two factors are apparently responsible for the tensile strengths of the hollow core rock bolts; these are (1) bond strength developed by the grouting material, and (2) mechanical wedging, caused by the expansion of the cone-and-shell head assembly against the side of the hole. As hole depth is increased, the total tensile load resistance also increases as a result of an improvement in resistance to pullout offered by the combination of bond strength and mechanical wedging. At a hole depth of 10 inches, the combined pullout resistance provided by grout bond and mechanical wedging of the expansion shell head assembly is high enough so that the ultimate strength of the rock bolt stud is developed. Although not investigated in this research, the relationship between pullout strength of ungrouted rock bolts attributed to the mechanical wedging of the head assembly alone and hole or installation depth may be important, and should be considered in any future research.

More important than maximum pullout strength to design engineers, perhaps, is the relationship between hole depth and the slip point load. When hollow core rock bolts with long cone-and-shell head assemblies were tested, it was

ClibPDF - www.fastio.com

noted that a significant increase in slip point loads was attained with a hole depth of up to 12 inches. At a 12-inch hole depth, the combined tension resistance of the bonding material and the expanded head assembly was enough to develop the yield strength of the rock bolt stud without excessive slippage.

The following loads listed in Table 10 summarize pullout test results of single hollow core rock bolts with long cone-and-shell head assemblies as contained in Table 6b and 6c (pages 49 and 51 respectively) of this report.

Table 10 - Pullout strengths of 1-inch-diameter rock bolts installed at various hole depths.

Hole depth, inches	Tensile load, kips: [individual] average	
	At the slip point	At ultimate pullout
8	[20.0,23.5] 21.8	[38.2,42.6] 40.4
10	[24.8,33.0] 28.9	[53.5,53.7] 53.6 (2)
12	[33.0,37.2] 35.1	[50.3,50.9] 50.6 (2)
14	[36.0,36.0] 36.0	[55.8,58.5] 57.2 (2)

NOTES:
- Rock bolt type : hollow core groutable rock bolts
  Grout type : Wil-X non-shrink cement grout
  Head assembly : long cone-and-shell
- (2) Denotes number of tests in which bolt tensile failure occurred.

ClibPDF - www.fastio.com

The average ultimate pullout loads reach a maximum when a hole depth of 10 inches is used. The loads at the slip point, however, increase considerably when embedment depth is increased, up to a hole depth of 12 inches. With depths greater than 12 inches, little increase in slip point loads was noticed.

It should also be mentioned here that when a long cone-and-shell head assembly is used, the effective installation depth to the center of the bearing area of the head assembly is approximately 4 1/2 inches less than the actual hole depth, as shown in Figure 6, section IV.B.3 (page 34) of this report. When a short cone-and-shell head assembly is used, the effective installation depth is increased, and is 2 1/8 inches less than the actual hole depth. A limited number of pullout tests conducted using short cone-and-shell head assemblies on hollow core rock bolts revealed that they work as well as long cone-and-shell assemblies when installed in holes at least 12 inches deep and in the center of concrete blocks, as shown from results presented in Table 6b (page 49).

G. The Effect of Sustained Loads on Rock Bolt Performance

Limited testing was performed to verify that little creep occurred under sustained load applied to a hollow core rock bolt installed with a long cone-and-shell expansion shell head assembly in a 12-inch-deep hole and bonded using Wil-X cement grout. The total amount of creep measured in a 100 hour period of a sustained 25-kip load was extremely small, only 0.002 inch. Almost all of the creep occurred within 20 hours of the onset of testing.

ClibPDF - www.fastio.com

The effect of either cyclic loading or shorter hole depths on creep has not been investigated in this research project. It is recommended that future research be done on these parameters.

H. The Effect of Group Action on Effective Pullout Strengths of Rock Bolts

Although a very limited number of pullout tests were conducted on pairs of rock bolts, it was learned that with pairs of hollow core rock bolts installed at a hole depth of 12 inches, high tensile strengths at the slip point could be obtained with the rock bolt systems spaced as close together as 6 inches. The average slip point for the rock bolt system, where a pair of bolts spaced 6 inches apart was tested, was 71.0 kips as computed from test results shown in Table 9 (page 66). This average is nearly twice the average slip point value of 35.1 kips found for an individual ;=ssw=
with an unlimited edge distance. It is interesting to note that although the tensile load at the slip point doubled when a pair of rock bolts was tested, the maximum pullout load increased from 53.3 kips (the ultimate strength for one rock bolt) to only 80.4 kips for the pair. It is expected that when two 1-inch-diameter hollow core rock bolts are spaced a distance of at least 15 1/2 inches apart, as shown in Figure 18, the ultimate pullout strength would approach 106.6 kips.

ClibPDF - www.fastio.com

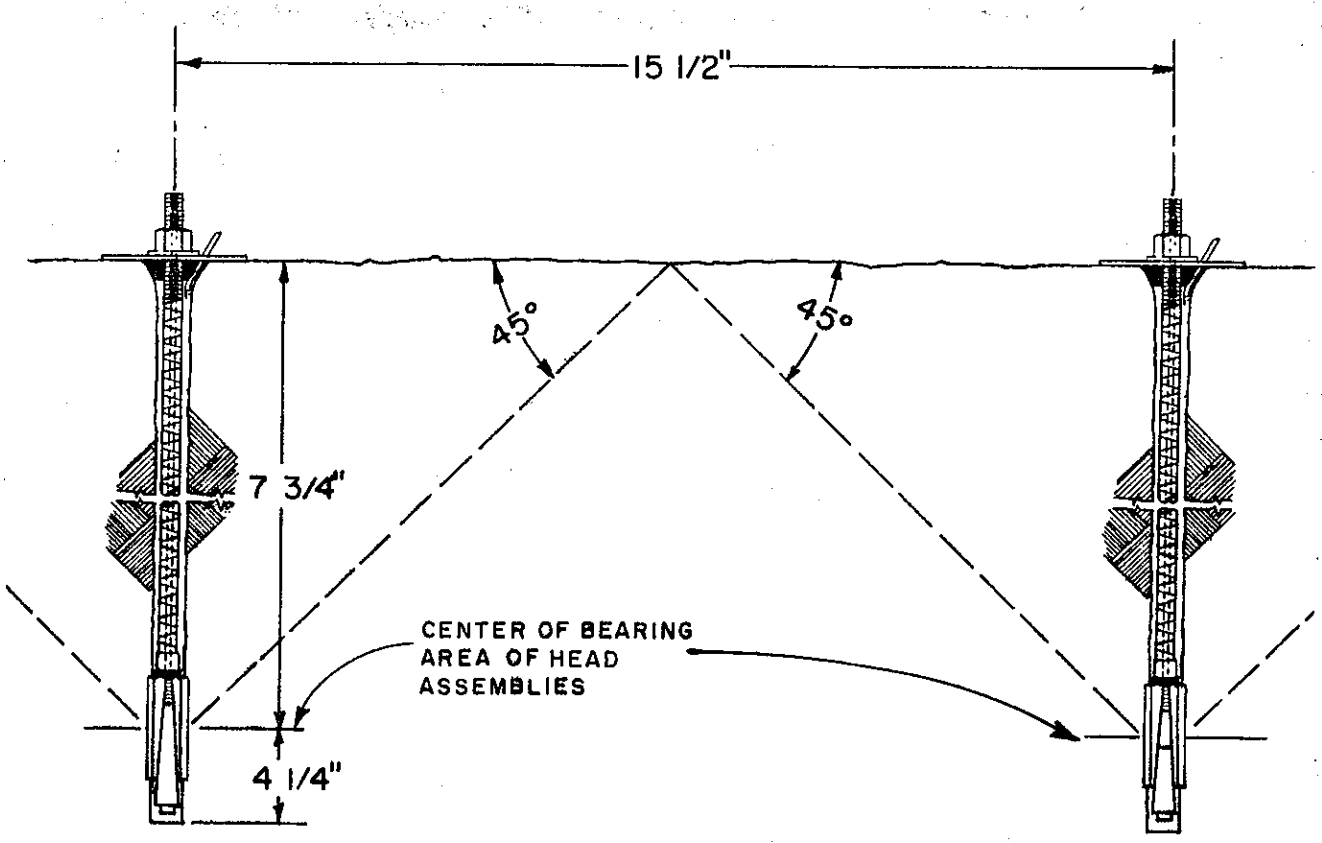

HOLLOW CORE ROCK BOLT
INSTALLED WITH LONG
CONE-AND-SHELL HEAD
ASSEMBLY

Figure 18 - Theoretical spacing required to develop maximum pullout loads for individual rock bolts.

ClibPDF - www.fastio.com

VI. REFERENCES

1. Askey, A., "Rock Bolting with Polyester Resin", The Journal of the Institution of Highway Engineer, Vol. 18, pp 28-33, December 1971.

2. Biviridge, R. L. W., "Repairs and Extensions to Concrete Structures Using Resin Anchored Bars", Civil Engineering and Public Works Review, Vol 68, No. 804, pp 609-611, July 1973.

3. Breen, J. E.; Hasselwander, G. B.; and Jirsa, J. O.; A Guide to the Selection of High-Strength Anchor Bolt Materials, Research Report 29-1, Center for Highway Research, University of Texas at Austin.

4. Conard, Richard F., "Tests of Grouted Anchor Bolts in Tension and Shear", American Concrete Institute Journal and Proceedings, Vol. 66, No. 9, pp 725-728, 1969.

5. Des Champs, Joseph S., "New Resin Anchors Rock Bolts", Engineering and Contract Record, Vol. 78, pp 69-70, August 1965.

6. Dusel, J. P., "The Effect of Surface Roughness of the Sides of Shallow Holes Drilled in Concrete on the Pull-out Strength of Bonded Rebar Dowels", California Department of Transportation, Office of Transportation Laboratory, PW0646930, March 1978.

7. Nordlin, E. F., Evaluation of Concrete Anchor Bolts, California Division of Highways, Report No. M&R 36390, June 1968.

ClibPDF - www.fastio.com

8. PCI Design Handbook, Prestressed Concrete Institute, 1st Edition, 1972.

9. Specification for Carbon Steel Externally and Internally Threaded Standard Fasteners, A307, ASTM Standards, Books No. 1 and No. 4.

10. Specification for Low-Alloy Steel Deformed Bars for Concrete Reinforcement, A706, ASTM Standards Book No. 4.

11. Specification for Quenched and Tempered Steel Bolts and Studs, A449, ASTM Standards, Book No. 4.

12. Specification for Zinc Coating (Hot-Dip) on Iron and Steel Hardware, A153, ASTM Standards, Book No. 3.

13. Standard Specifications, 1975 Edition, State of California, Department of Transportation.

14. Tentative Recommendation for Prestressed Rock and Soil Anchors, Prestressed Concrete Institute, 1974.

15. Williams Rock Bolt Manual, Bulletin RB 7677, Williams Form Engineering Corp., Grand Rapids, MI., 1976.

ClibPDF - www.fastio.com

VII. APPENDICES

A. Diagrams of Concrete Specimens.

B. Concrete Mix Information.

C. Instrumentation Diagram for Measuring and Recording Load and Deflection of Rock Bolts and Threaded Bars.

D. Details of Two-Bolt Group Test Fixture and Pull Bar.

E. Manufacturer's Current Specifications for 1-Inch-Diameter Hollow Core Rock Bolts and Components.

ClibPDF - www.fastio.com

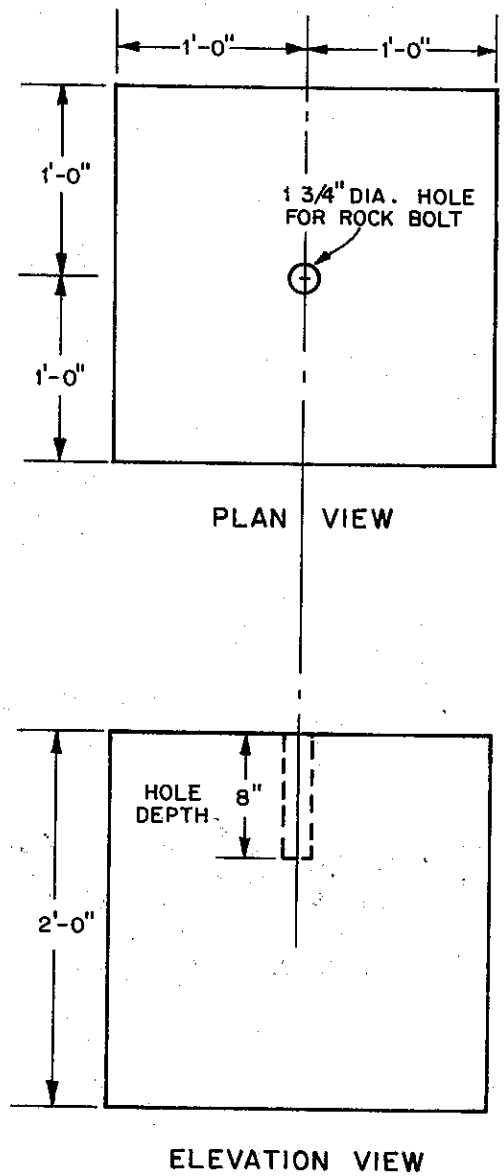

Appendix A-1 - Unreinforced Concrete Blocks
Tested in First Part of Phase 1.

ClibPDF - www.fastio.com

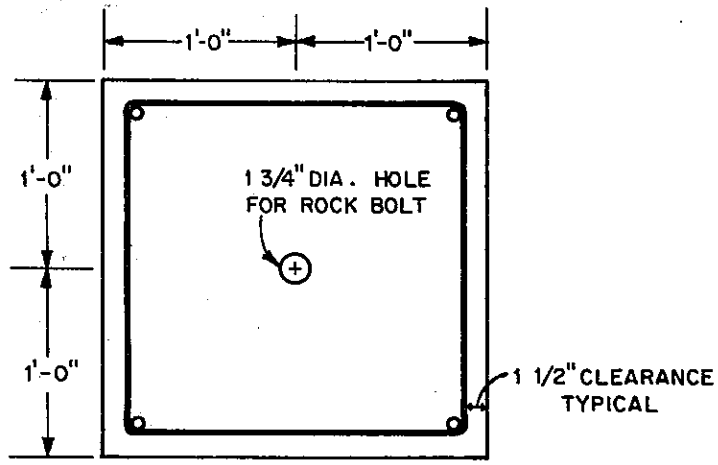

PLAN VIEW

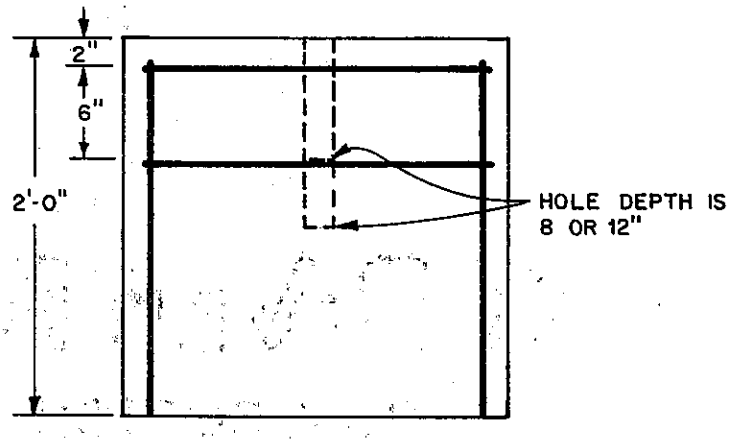

ELEVATION VIEW

NOTE:
ALL REBARS #4 GRADE 60

Appendix A-2 - Nominally Reinforced Concrete Blocks Tested in Second Part of Phase 1.

ClibPDF - www.fastio.com

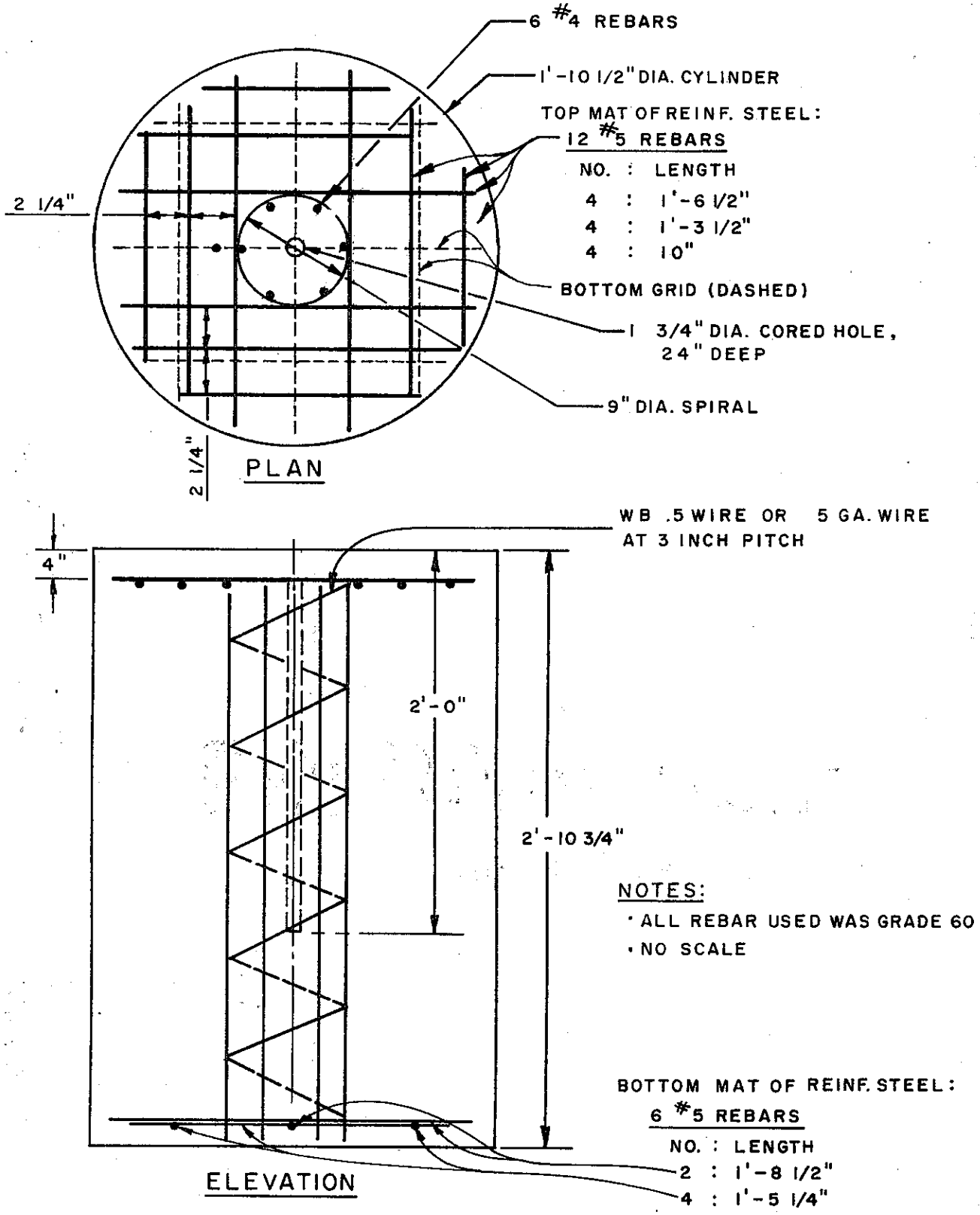

Appendix A-3 - Reinforced Concrete Cylinders Used in Pullout Tests of Threaded Steel Rods - Phase 2.

ClibPDF - www.fastio.com

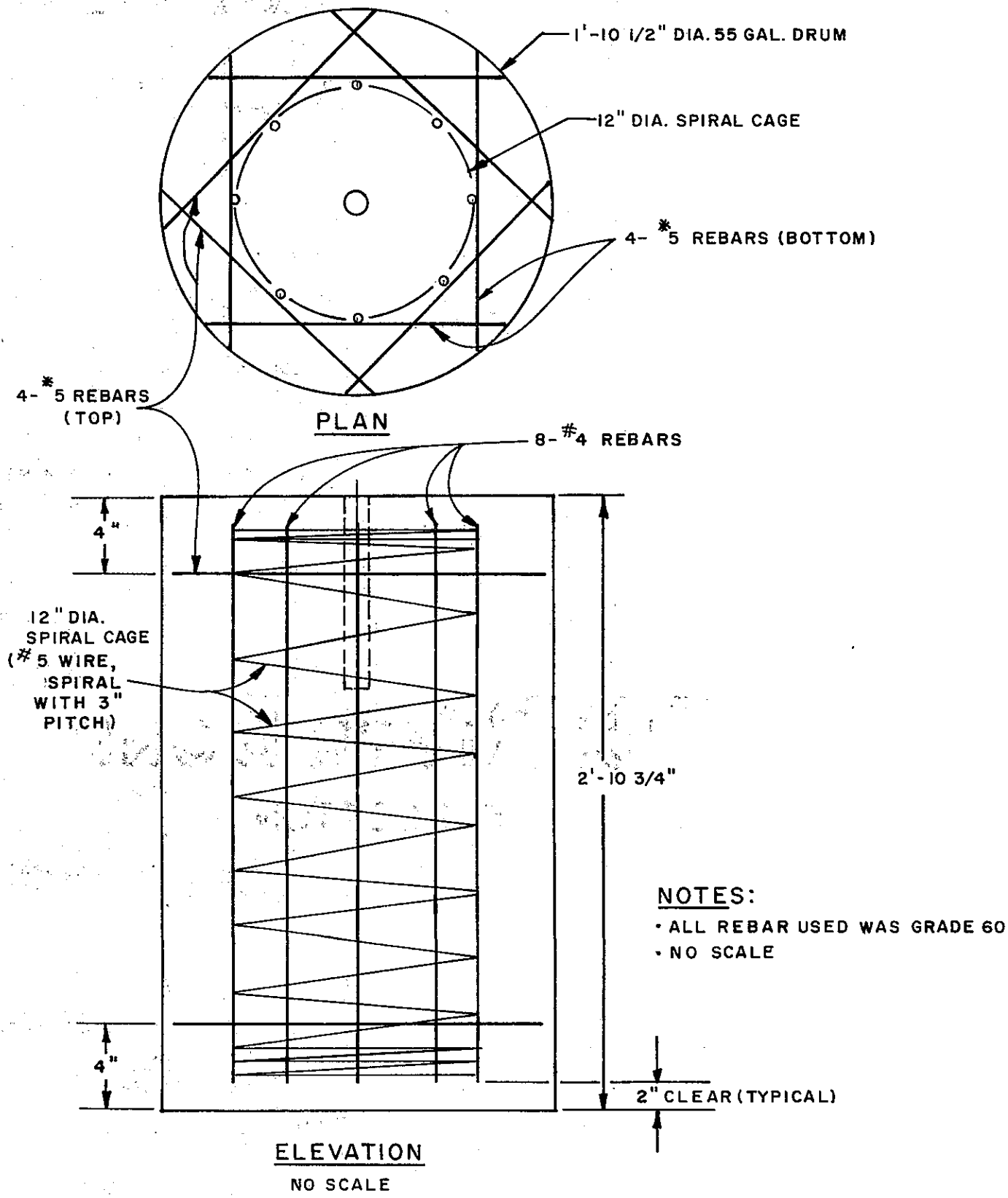

Appendix A-4 - Reinforced Concrete Cylinders Used in Pullout Tests of Hollow Core Rock Bolts in Portions of Phases 1 and 2.

ClibPDF - www.fastio.com

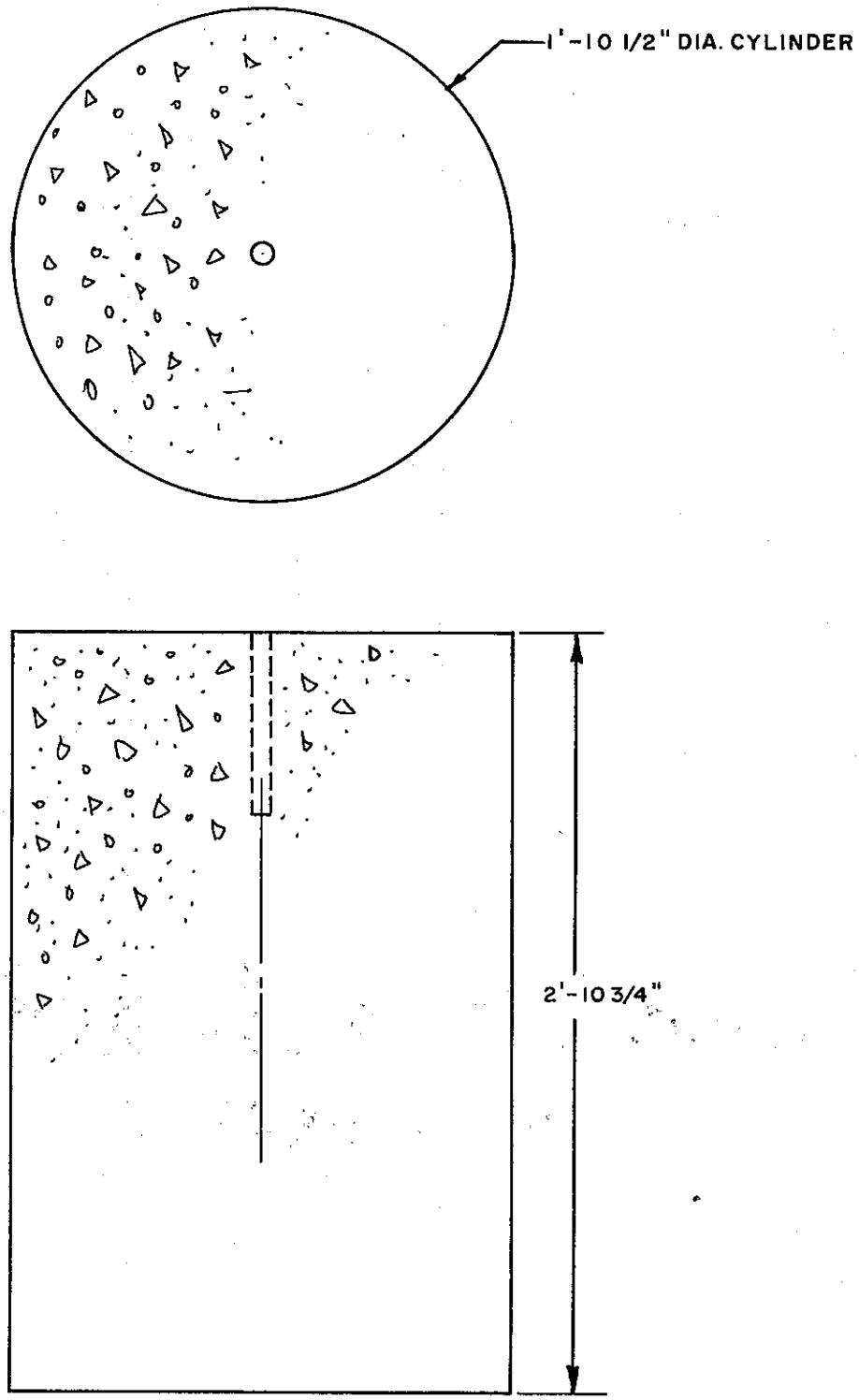

Appendix A-5 - Unreinforced Concrete Cylinders Used in Pullout Tests of Hollow Core Rock Bolts in Parts of Phase 1.

ClibPDF - www.fastio.com

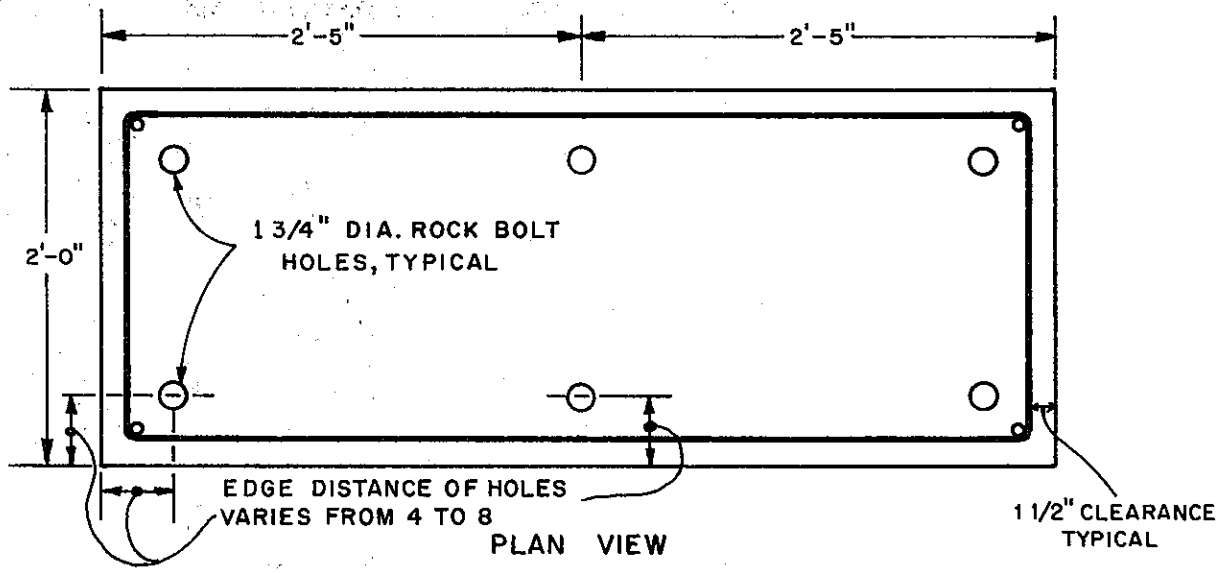

PLAN VIEW

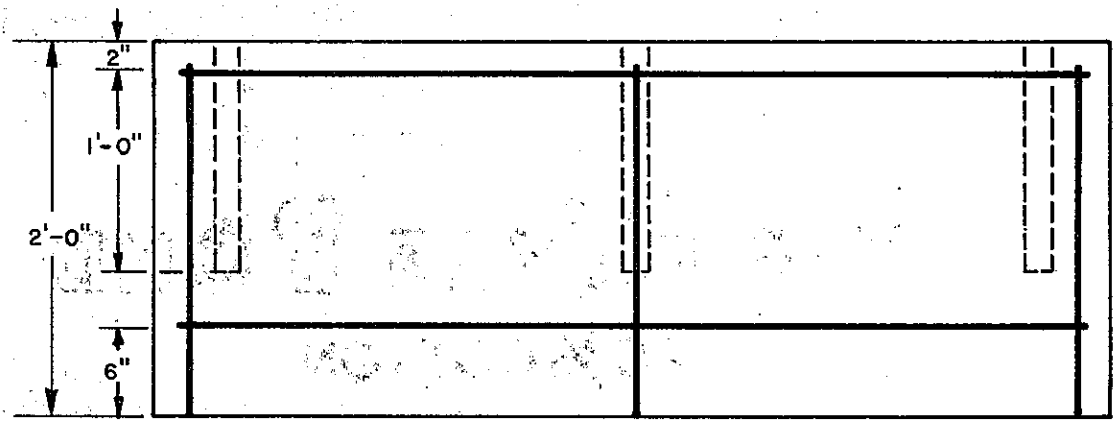

ELEVATION VIEW

NOTE:
ALL REBAR # 4 GRADE 60

Appendix A-6 - Nominally Reinforced Concrete Blocks Used in Minimum Edge Distance Tests - Phase 3.

ClibPDF - www.fastio.com

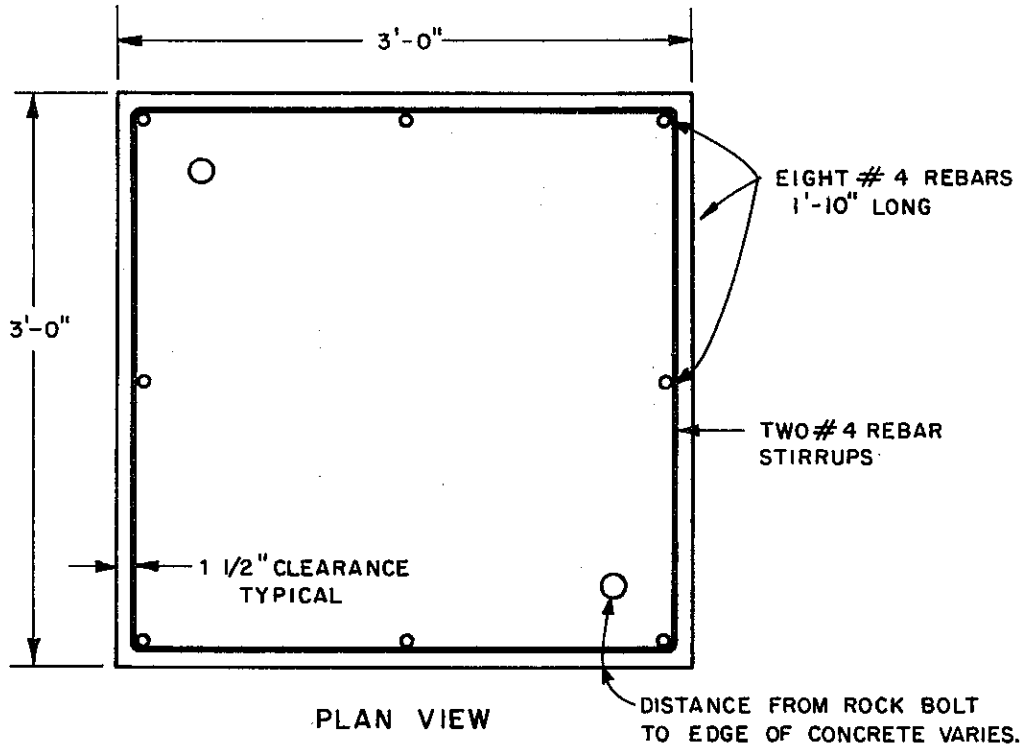

PLAN VIEW

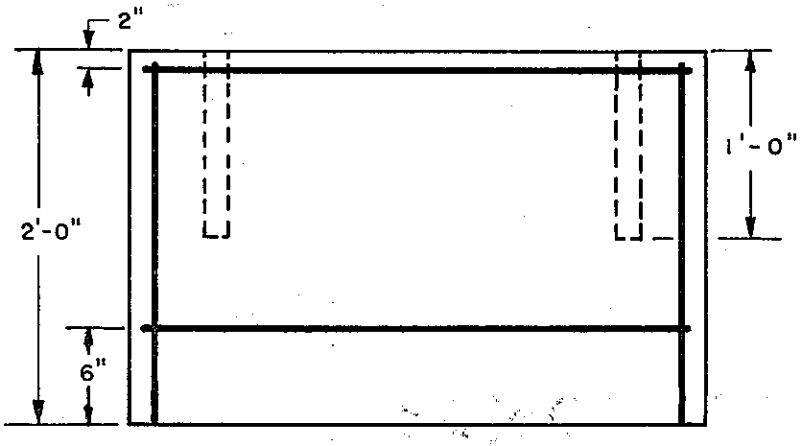

ELEVATION VIEW

Appendix A-7 - Nominally Reinforced Concrete Blocks Used in Pullout Tests to Determine Minimum Clear Edge Distances and Rock Bolt Creep - Phases 3 and 4.

ClibPDF - www.fastio.com

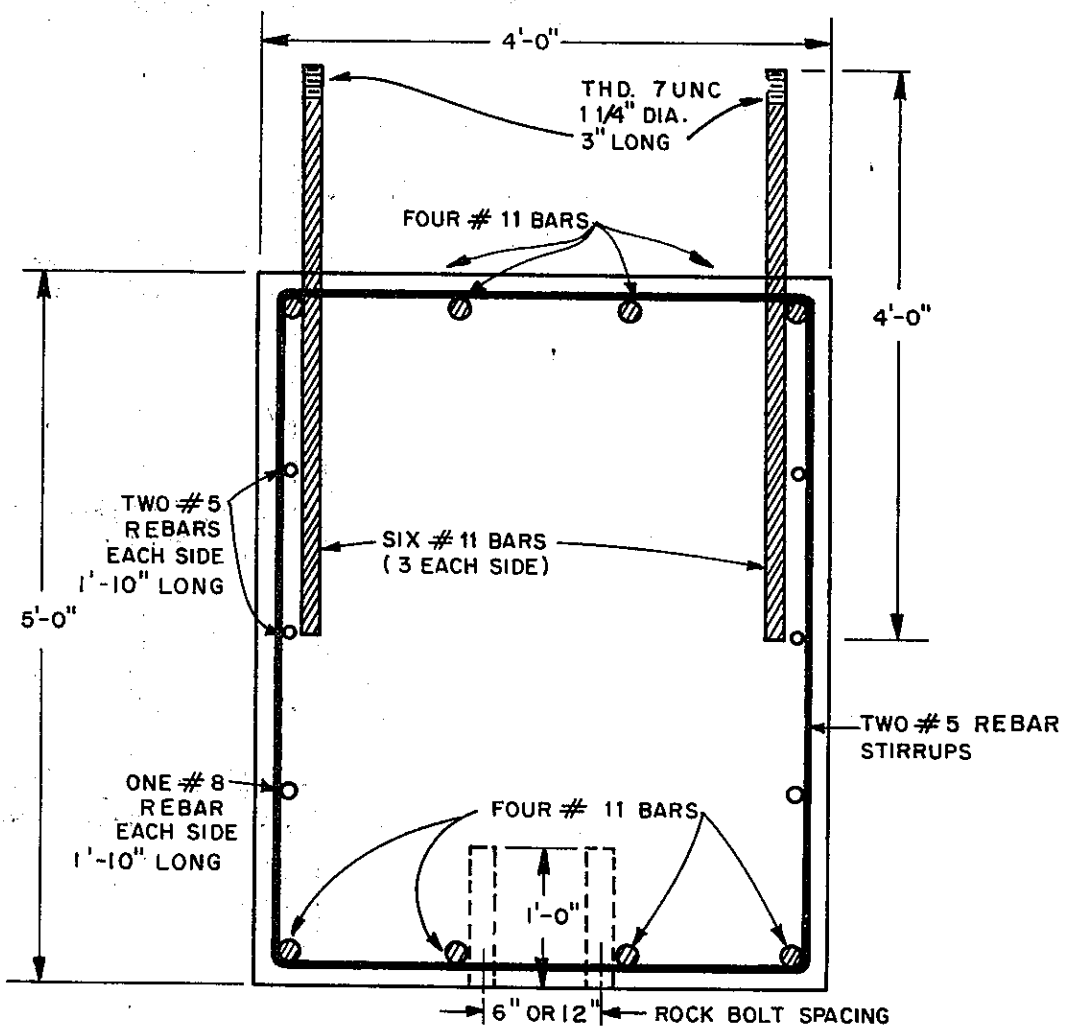

ELEVATION VIEW

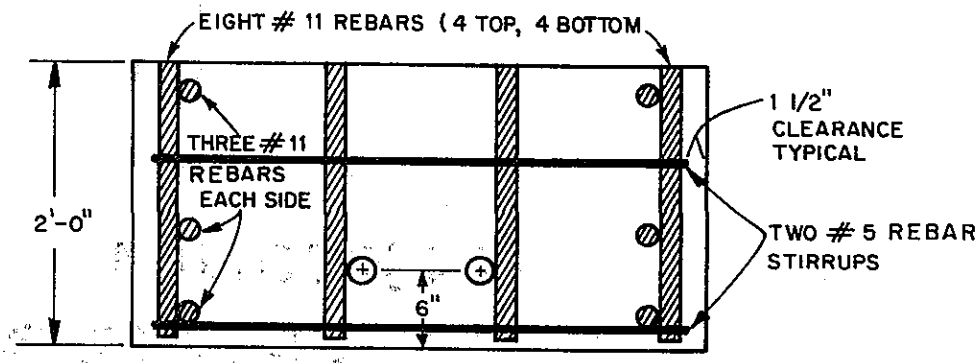

PLAN VIEW

NOTES:
- NOT TO SCALE
- ALL REBARS ASTM A 615, GRADE 60 STEEL

Appendix A-8 - Details of Prototype of Bent Cap End for Group Tests of Rock Bolt Pairs - Phase 5.

ClibPDF - www.fastio.com

CONCRETE MIX DESIGN DESIGNATION - No. A-1082-A

° Maximum Aggregate Size	1 Inch
° Minimum 28 Day Compressive Strength Required	4000 psi
° Maximum Slump ASTM Slump Cone	4 Inches
° Water Cement Ratio	0.50
° Cement Content	564 lb/yd^3
° Fine Aggregate (No. 4 x No. 200)	1280 lb/yd^3
° Coarse Aggregate (1" x No. 4)	1990 lb/yd^3
° Admixtures	None Added

Appendix B - Concrete Mix Information.

ClibPDF - www.fastio.com

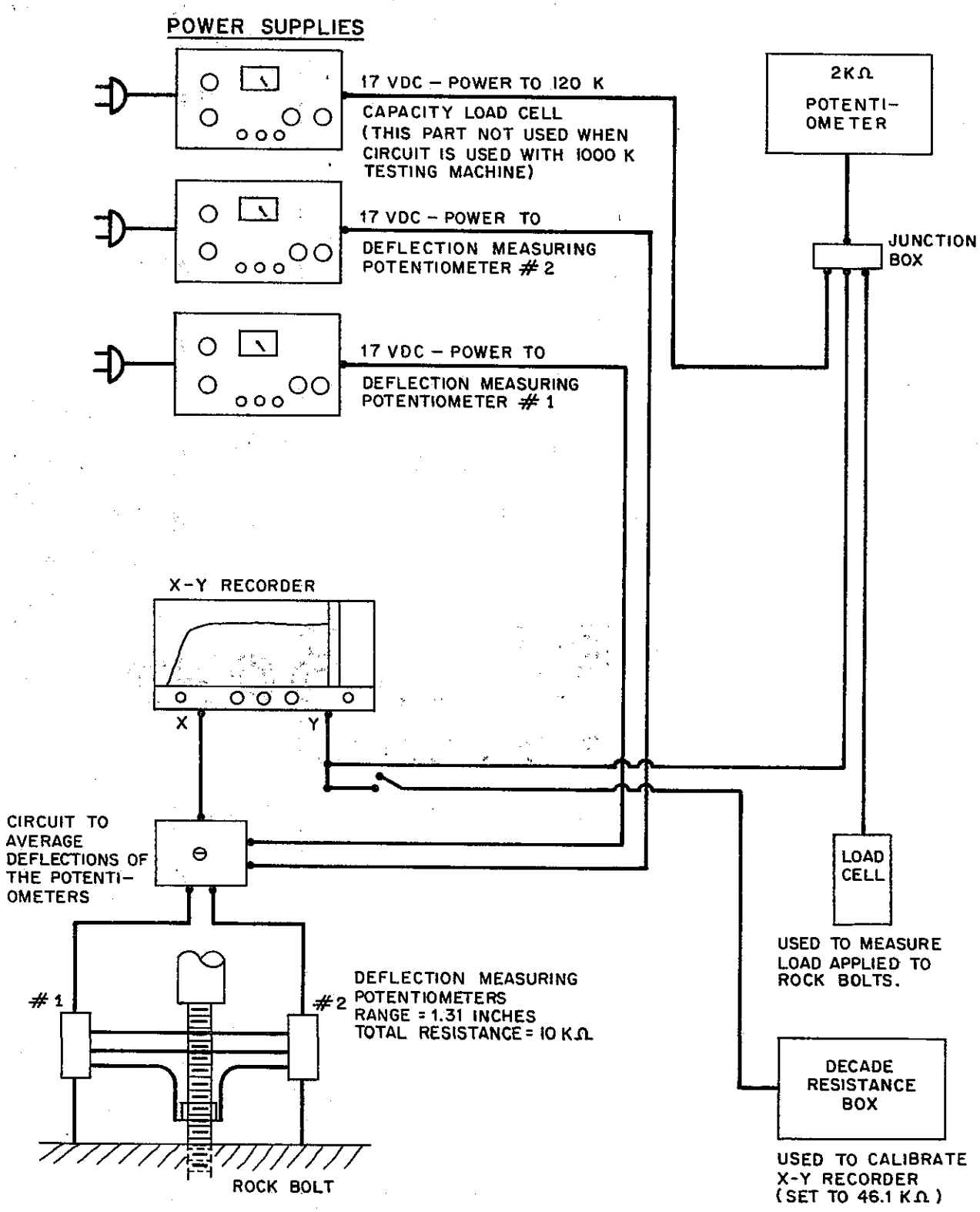

Appendix C - Instrumentation Diagram for Measuring and Recording Load and Deflections of Rock Bolts and Threaded Bars.

ClibPDF - www.fastio.com

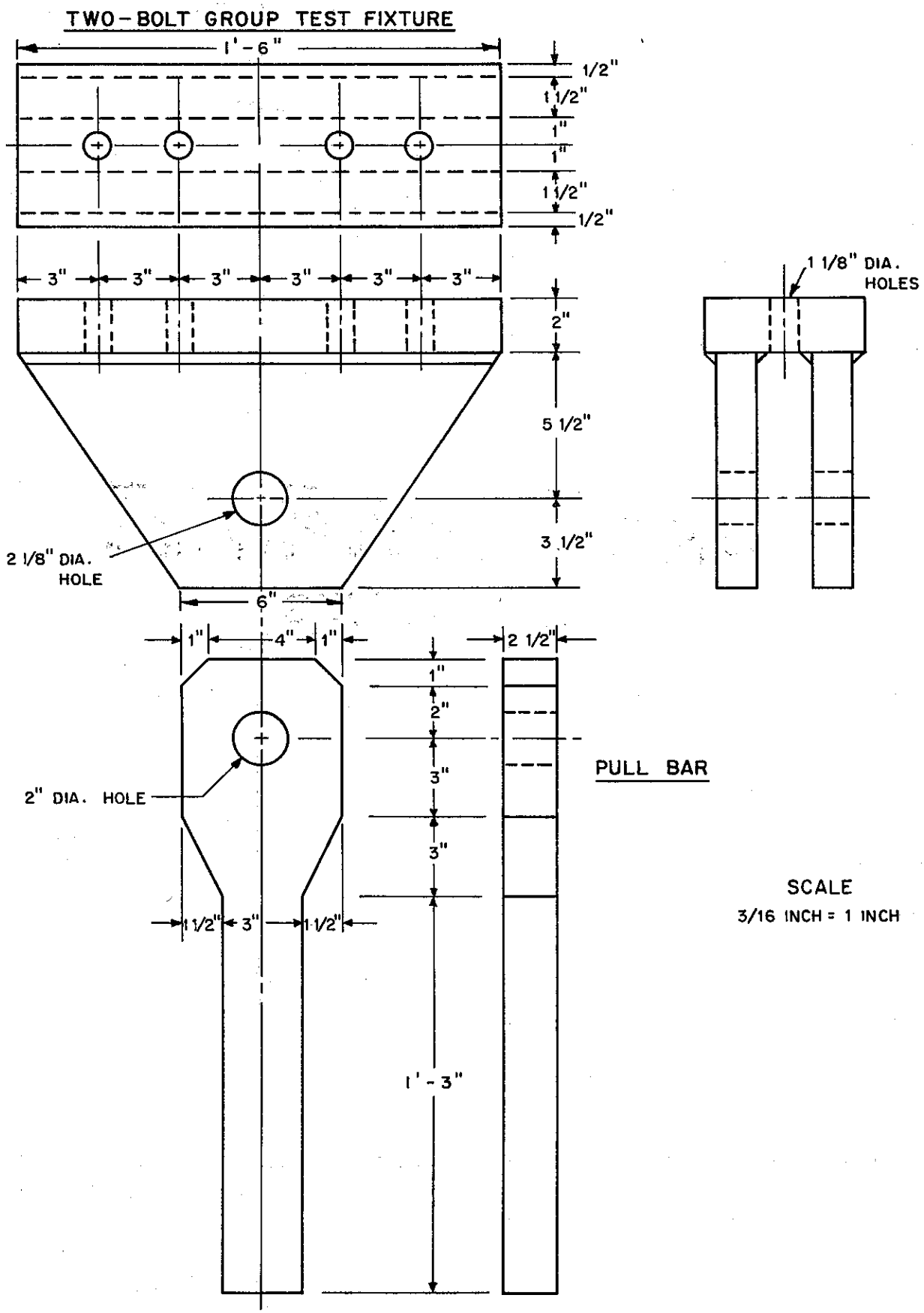

Appendix D - Details of Two-Bolt Group Test Fixture and Pull Bar.

ClibPDF - www.fastio.com

ADDITIONAL INFORMATION FOR

SPECIFICATIONS OF WILLIAMS 1" HOLLOW CORE ROCK BOLTS AND COMPONENTS

#8, 1" Hollow Core Rebar Rock Bolt Data

1. Nominal cross sectional area thru bar = .64046
2. Nominal cross sectional area thru threads = .5569
3. Nominal size of continuous hole thru center of bolt = 1/4"
4. Continuous lengths of bolt w/o coupling = 30'-0"
5. Meets physical requirements of ASTM:A 615-76, A 616-76, A 617-76, and A 307 (with exception of smaller cross sectional area because of 1/4" dia. hollow core).
6. Threads = 1"-8UNC class 2A thread form that is rolled for higher tensile strength and concentric thread form.

Hex Nuts

1. Grade : 2H
2. Threaded : 1"-8UNC
3. Conform to ASTM A-194
4. Nominal thickness : 63/64"
5. Nominal width across the flats : 1-5/8"

Hardened Steel Washer

1. Conforms or exceeds : ASTM A-325
2. Size : 1-7/8" O.D., 1-1/16" I.D., 1/8" thick.

Expansion Cone Type C, No. LCSF-175

1. Material : Malleable iron
2. Conforms to : ASTM A-47 grade 32510
3. Dimensions : 3-3/4" overall length, cone taper 1-17/64" to 1-1/2".
4. Short flange for preventing "pull thru" of anchor assembly : 9/32" thick.

Appendix E - Manufacturers Current Specifications for 1-Inch-Diameter Hollow Core Rock Bolts and Components.

ClibPDF - www.fastio.com

ADDITIONAL INFORMATION FOR SPECIFICATIONS OF WILLIAMS 1" HOLLOW CORE ROCK BOLTS AND COMPONENTS (CONTINUED)

Expansion Shell Type C, No. LS-175

1. Material : Malleable Iron
2. Conforms to : ASTM A-47 grade 32510
3. Dimensions : 3-3/4" overall length, max. O.D. before expansion 1-21/32" dia.
4. Shell exterior : Not serrated so that full bearing surface of expansion shell is utilized without shearing bolting media.

Thrust Ring

1. Case hardened to prevent breaking
2. Dimensions : 1-1/2" O.D., 15/16" thickness
3. Threaded 1"-8UNC class 2
4. Provides positive stop to prevent cone and shell turning while anchor is being torqued for expansion.

Slip Rings (Two)

1. Case hardened
2. Dimensions : 1-1/2" O.D., 1-1/32" I.D., 1/16" thickness

Bevel Washers (When needed) No. BW9

1. Conforms to : ASTM A-197
2. Dimensions : 1/4" to 9/16" thickness, 2" O.D., 1-3/16" I.D.

Key Hole Bearing Plates

1. Steel plate conforming to : ASTM A-36
2. Dimensions : 3/8" x 8" x 8" nominal dimensions with a key hole 1-1/16" to 1/2" dia., 2-3/16" overall length to provide space for de-air tube.

ALL ROCK BOLT ASSEMBLIES ARE AVAILABLE WITH :

1. Notarized certificate of compliance
2. Field familiarization by a Williams Engineer
3. Installation procedures

ClibPDF - www.fastio.com

ClibPDF - www.fastio.com