ACHSIMG-X037(195)E

Dist	COUNTY	ROUTE	POST MILES TOTAL PROJECT	SHEET No.	TOTAL SHEETS
07	LA	105,110	R6.6/R8.0 13.2/14.7	1	93

STATE OF CALIFORNIA

DEPARTMENT OF TRANSPORTATION

PROJECT PLANS FOR CONSTRUCTION ON

STATE HIGHWAY

IN LOS ANGELES COUNTY
IN LOS ANGELES
AT ROUTE 105/110 SEPARATION

TO BE SUPPLEMENTED BY STANDARD PLANS DATED 2010

INDEX OF PLANS

SHEET No.	DESCRIPTION
1	TITLE AND LOCATION MAP
2-4	LAYOUTS
5-10	CONSTRUCTION DETAILS
11-15	UTILITY PLANS
16	CONSTRUCTION AREA SIGNS
17-25	TRAFFIC HANDLING DETAILS
26-30	SIGN PLANS
31-37	SIGN DETAILS & QUANTITIES
38	SUMMARY OF QUANTITIES
39-47	ELECTRICAL PLANS
48	ELECTRICAL DETAILS
49	ELECTRICAL QUANTITIES
50	STRUCTURE PLAN
51-93	REVISED STANDARD PLANS

THE STANDARD PLANS LIST APPLICABLE TO THIS CONTRACT IS INCLUDED IN THE NOTICE TO BIDDERS AND SPECIAL PROVISIONS BOOK.

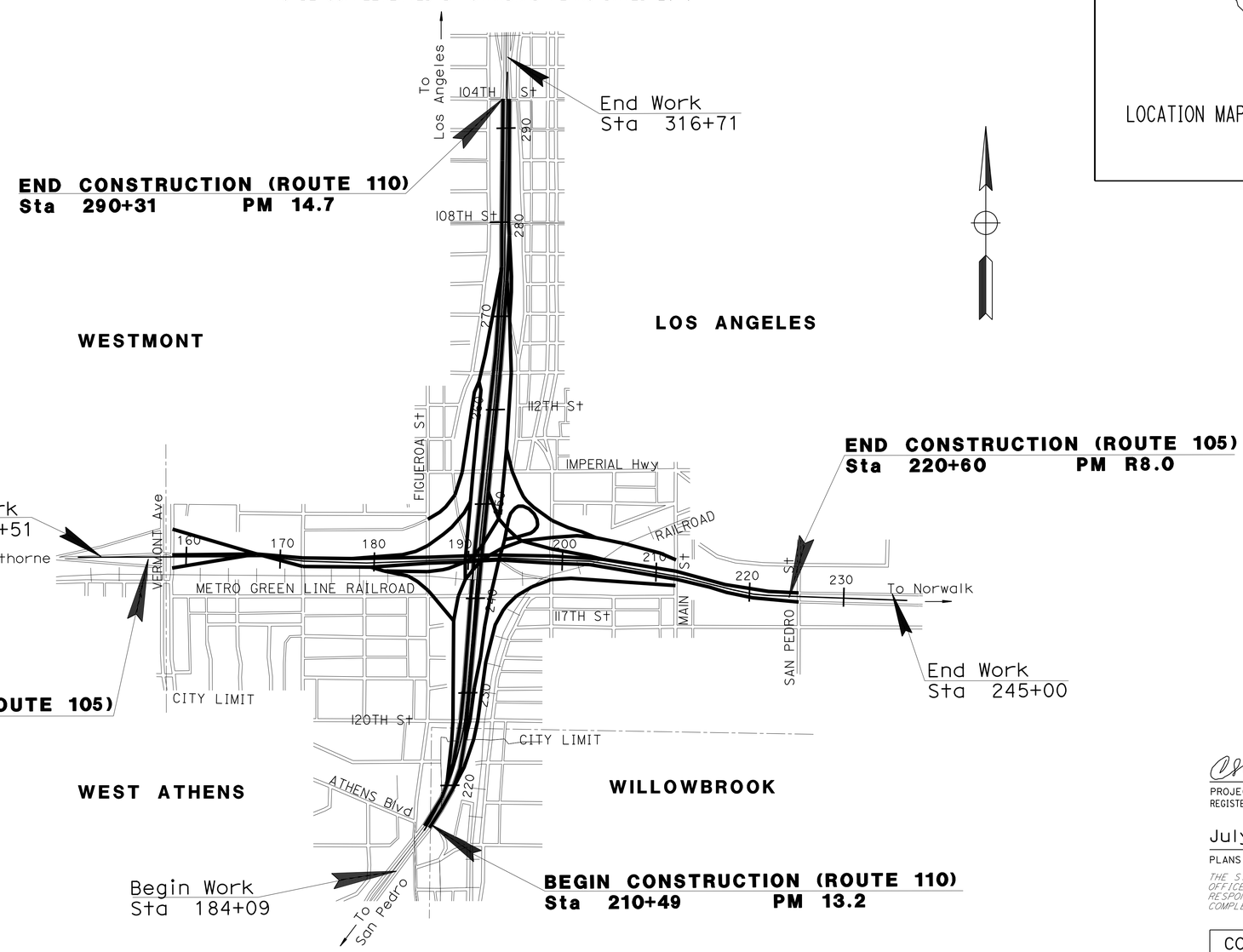

THE CONTRACTOR SHALL POSSESS THE CLASS (OR CLASSES) OF LICENSE AS SPECIFIED IN THE "NOTICE TO BIDDERS."

PROJECT MANAGER SHARAS BANGALORE

DESIGN MANAGER FATEMEH ANSARI

6/21/16
PROJECT ENGINEER REGISTERED ELECTRICAL ENGINEER — DATE

REGISTERED PROFESSIONAL ENGINEER CESAR HERNANDEZ No. E15805 Exp. 12/31/16 ELECTRICAL STATE OF CALIFORNIA

July 1, 2016
PLANS APPROVAL DATE

THE STATE OF CALIFORNIA OR ITS OFFICERS OR AGENTS SHALL NOT BE RESPONSIBLE FOR THE ACCURACY OR COMPLETENESS OF SCANNED COPIES OF THIS PLAN SHEET.

CONTRACT No.	07-297404
PROJECT ID	0713000149

LAST REVISION 00-00-00 DATE PLOTTED => 30-AUG-2016 TIME PLOTTED => 12:23

Dist	COUNTY	ROUTE	POST MILES TOTAL PROJECT	SHEET No.	TOTAL SHEETS
07	LA	105,110	R6.6/R8.0 13.2/14.7	2	93

REGISTERED CIVIL ENGINEER 6/21/16 DATE

7-1-16
PLANS APPROVAL DATE

REGISTERED PROFESSIONAL ENGINEER
ANH D. NGUYEN
No. 62370
Exp. 9/30/17
CIVIL
STATE OF CALIFORNIA

THE STATE OF CALIFORNIA OR ITS OFFICERS OR AGENTS SHALL NOT BE RESPONSIBLE FOR THE ACCURACY OR COMPLETENESS OF SCANNED COPIES OF THIS PLAN SHEET.

NOTE:
FOR ACCURATE RIGHT OF WAY DATA, CONTACT RIGHT OF WAY ENGINEERING AT THE DISTRICT OFFICE.

ABBREVIATIONS:

CAB	CONCRETE ANCHOR BLOCK
Ctr	CONTROL
FLARED	CALTRANS APPROVED ALTERNATIVE FLARED TERMINAL SYSTEM
Grail	GUARDRAIL
TR	TRANSITION RAILING (TYPE WB-31)
TSy	TERMINAL SYSTEM
Veg	VEGETATION

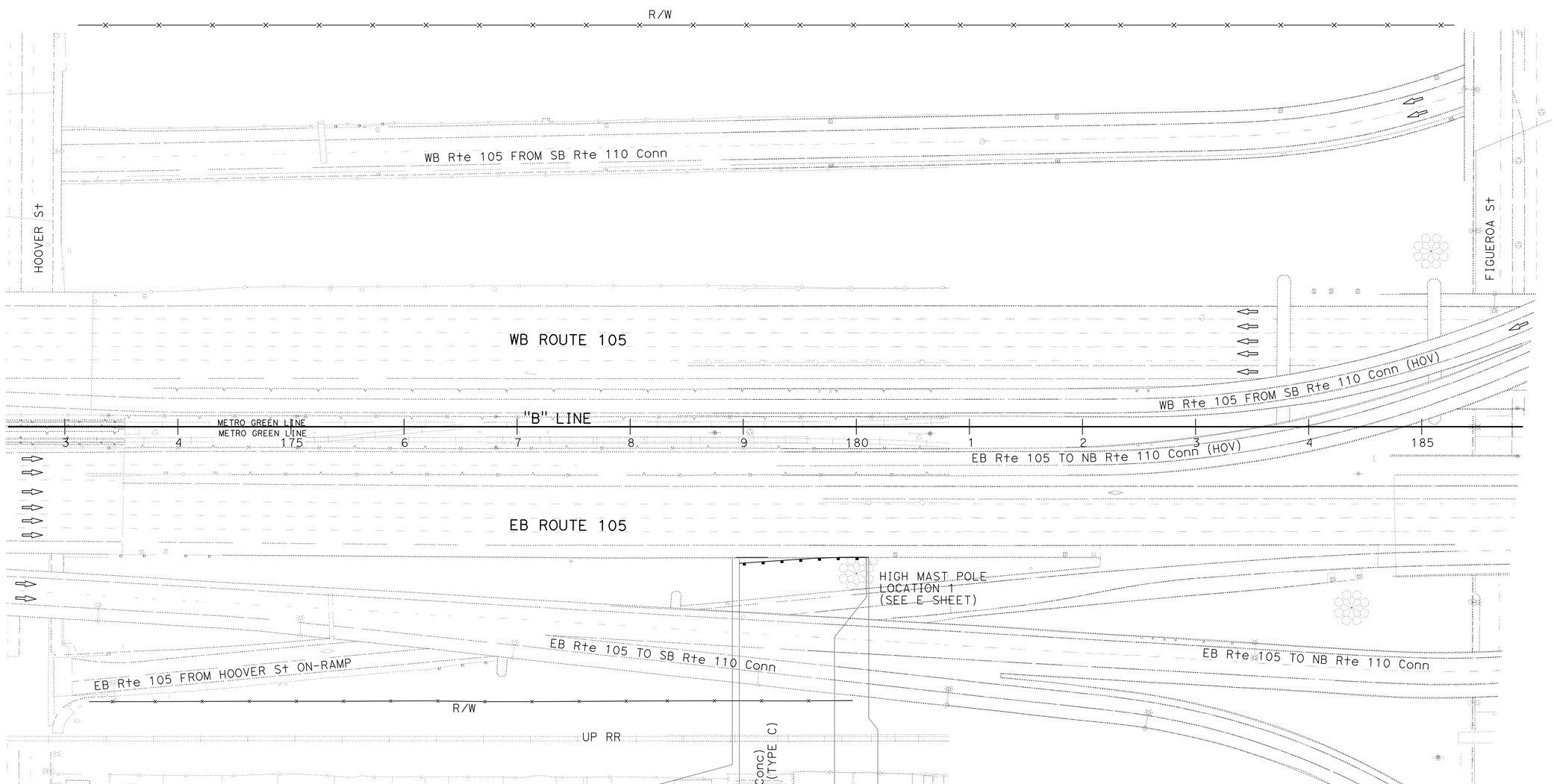

LOCATION 1
EB Sta 179+50.00
(FOR MORE INFORMATION, SEE Const DETAILS)

178+94.50 "B" LINE
Beg REMOVE AC DIKE
Beg PLACE HMA DIKE
TRANSITION
(TYPE A TO TYPE C)

178+96.50 "B" LINE
Beg MGS
Beg Veg Ctr (MINOR Conc)
Beg PLACE HMA DIKE (TYPE C)

180+09.00 "B" LINE
END MGS

180+11.00 "B" LINE
END Veg Ctr
(MINOR Conc)

LAYOUT
SCALE 1" = 50'

L-1

REVISED BY | DATE REVISED
JAMES M. CANALITA | ANH D. NGUYEN
CALCULATED-DESIGNED BY | CHECKED BY
FUNCTIONAL SUPERVISOR
MOHAMMED CHOWDHURY

STATE OF CALIFORNIA - DEPARTMENT OF TRANSPORTATION
Caltrans® TRAFFIC DESIGN

S:\design\297401\traffic\FINAL PLANS 4_1_16\729740ea001.dgn

LAST REVISION 00-00-00 | DATE PLOTTED => 30-AUG-2016 | TIME PLOTTED => 12:23

Dist	COUNTY	ROUTE	POST MILES TOTAL PROJECT	SHEET No.	TOTAL SHEETS
07	LA	105,110	R6.6/R8.0 13.2/14.7	3	93

REGISTERED CIVIL ENGINEER 6/21/16 DATE

7-1-16
PLANS APPROVAL DATE

REGISTERED PROFESSIONAL ENGINEER
ANH D. NGUYEN
No. 62370
Exp. 9/30/17
CIVIL
STATE OF CALIFORNIA

THE STATE OF CALIFORNIA OR ITS OFFICERS OR AGENTS SHALL NOT BE RESPONSIBLE FOR THE ACCURACY OR COMPLETENESS OF SCANNED COPIES OF THIS PLAN SHEET.

NOTE:
FOR ACCURATE RIGHT OF WAY DATA, CONTACT RIGHT OF WAY ENGINEERING AT THE DISTRICT OFFICE.

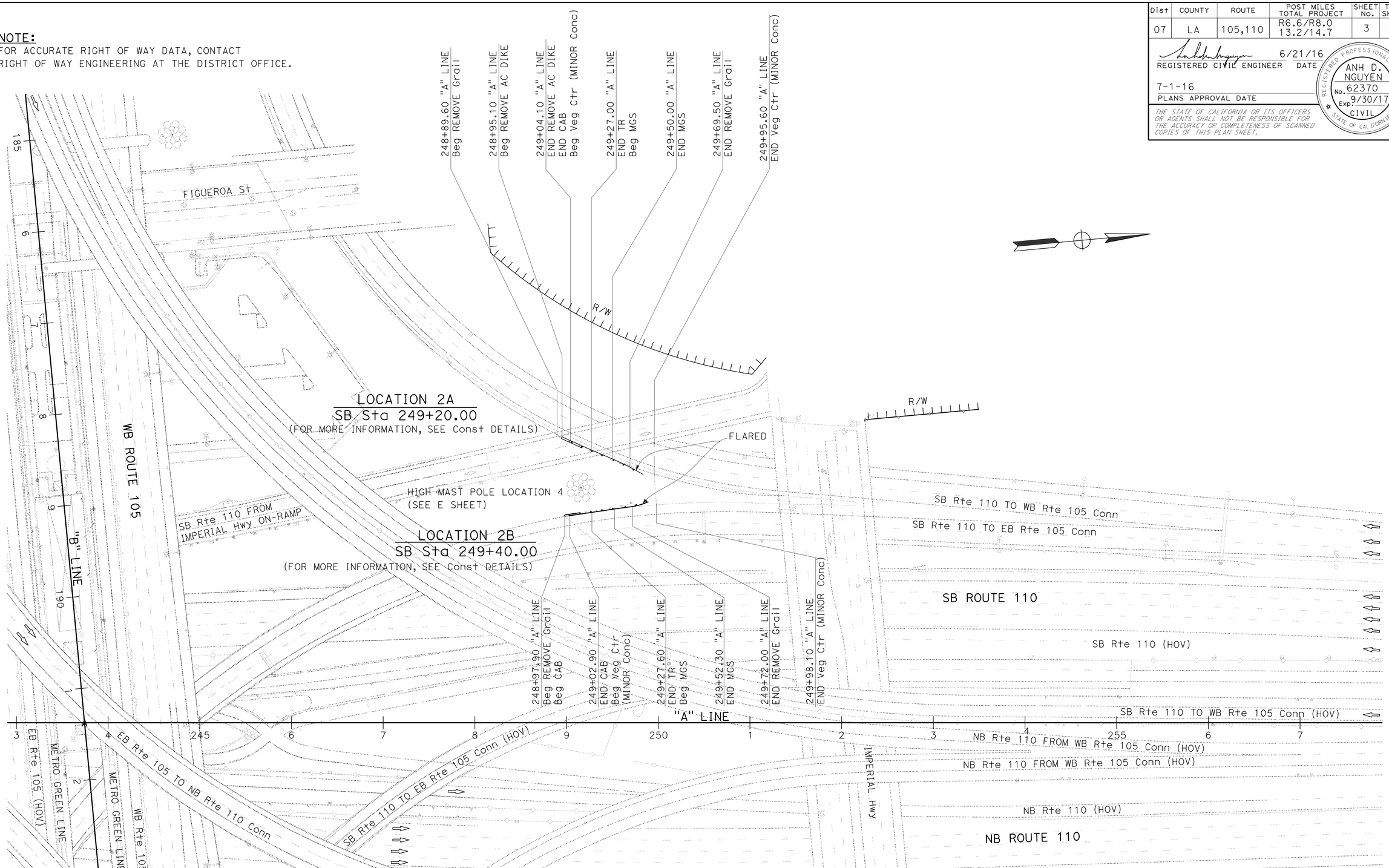

LAYOUT
SCALE 1" = 50'

L-2

STATE OF CALIFORNIA - DEPARTMENT OF TRANSPORTATION
Caltrans® **TRAFFIC DESIGN**

FUNCTIONAL SUPERVISOR: MOHAMMED CHOWDHURY
CALCULATED-DESIGNED BY: JAMES M. CANALITA
CHECKED BY: ANH D. NGUYEN
REVISED BY
DATE REVISED

LAST REVISION
DATE PLOTTED => 30-AUG-2016
TIME PLOTTED => 12:23
00-00-00

Dist	COUNTY	ROUTE	POST MILES TOTAL PROJECT	SHEET No.	TOTAL SHEETS
07	LA	105,110	R6.6/R8.0 13.2/14.7	4	93

REGISTERED CIVIL ENGINEER 6/21/16 DATE

7-1-16
PLANS APPROVAL DATE

REGISTERED PROFESSIONAL ENGINEER
ANH D. NGUYEN
No. 62370
Exp. 9/30/17
CIVIL
STATE OF CALIFORNIA

THE STATE OF CALIFORNIA OR ITS OFFICERS OR AGENTS SHALL NOT BE RESPONSIBLE FOR THE ACCURACY OR COMPLETENESS OF SCANNED COPIES OF THIS PLAN SHEET.

NOTE:
FOR ACCURATE RIGHT OF WAY DATA, CONTACT
RIGHT OF WAY ENGINEERING AT THE DISTRICT OFFICE.

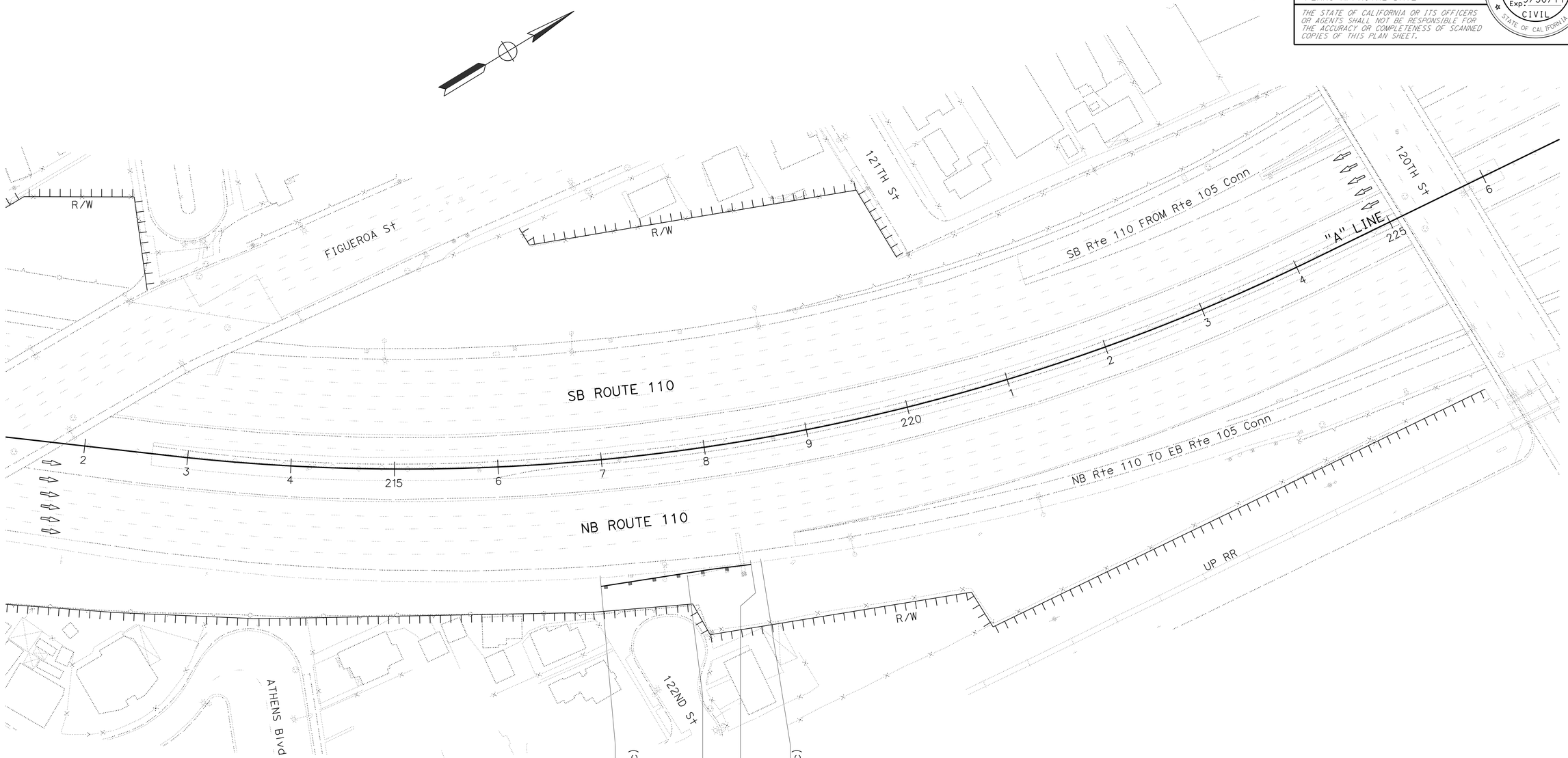

LOCATION 3
NB Sta 217+50.00
(FOR MORE INFORMATION, SEE Const DETAILS)

216+89.20 "A" LINE
Beg MGS
Beg Veg Ctr (MINOR Conc)

217+64.20 "A" LINE
Beg REMOVE Grail

218+26.70 "A" LINE
END REMOVE Grail
END MGS

218+36.70 "A" LINE
END Veg Ctr (MINOR Conc)

LAYOUT
SCALE 1" = 50'

L-3

STATE OF CALIFORNIA - DEPARTMENT OF TRANSPORTATION
Caltrans® **TRAFFIC DESIGN**

FUNCTIONAL SUPERVISOR: MOHAMMED CHOWDHURY
CALCULATED-DESIGNED BY: JAMES M. CANALITA
CHECKED BY: ANH D. NGUYEN
REVISED BY
DATE REVISED

LAST REVISION 00-00-00
DATE PLOTTED => 30-AUG-2016
TIME PLOTTED => 12:23

Dist	COUNTY	ROUTE	POST MILES TOTAL PROJECT	SHEET No.	TOTAL SHEETS
07	LA	105,110	R6.6/R8.0 13.2/14.7	5	93

REGISTERED CIVIL ENGINEER 6/21/16 DATE

7-1-16
PLANS APPROVAL DATE

REGISTERED PROFESSIONAL ENGINEER
ANH D. NGUYEN
No. 62370
Exp. 9/30/17
CIVIL
STATE OF CALIFORNIA

THE STATE OF CALIFORNIA OR ITS OFFICERS OR AGENTS SHALL NOT BE RESPONSIBLE FOR THE ACCURACY OR COMPLETENESS OF SCANNED COPIES OF THIS PLAN SHEET.

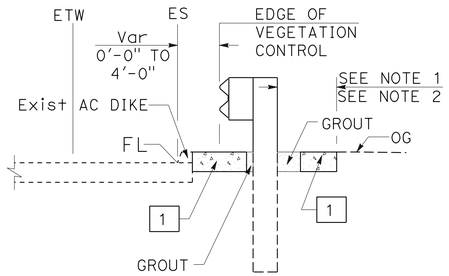

SECTION A-A

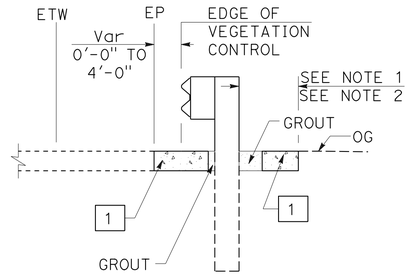

SECTION B-B

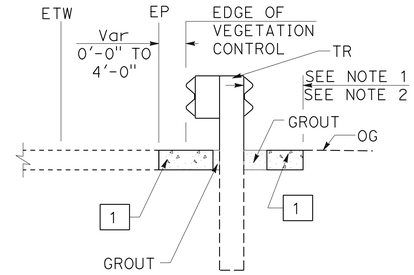

SECTION C-C

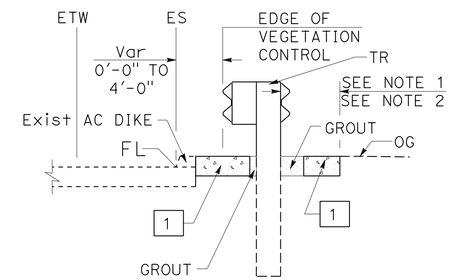

SECTION D-D

LEGEND:

SHEET No. OR Std PLAN No.

DETAIL No.

1 VEGETATION CONTROL (MINOR Conc)

2 0.25' MINOR HMA

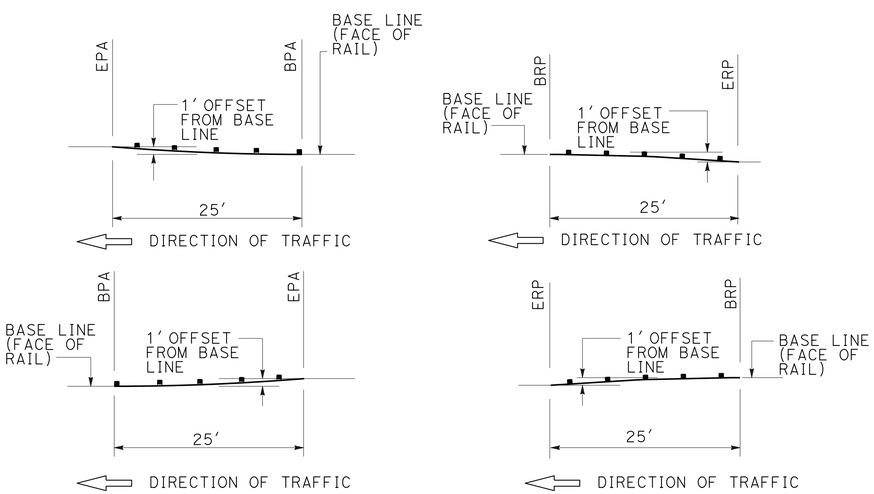

PARABOLAS

REVERSE PARABOLAS

TYPICAL LAYOUT OF PARABOLAS

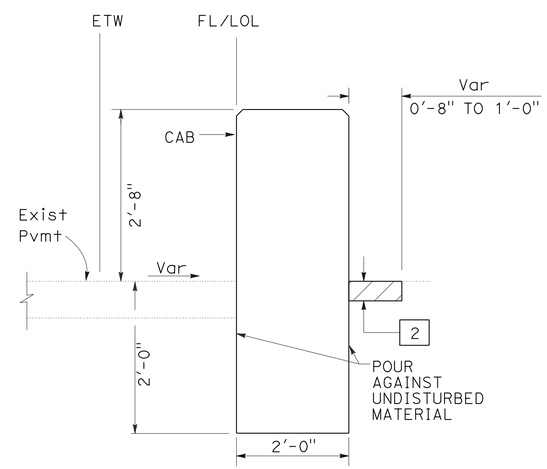

SECTION E-E

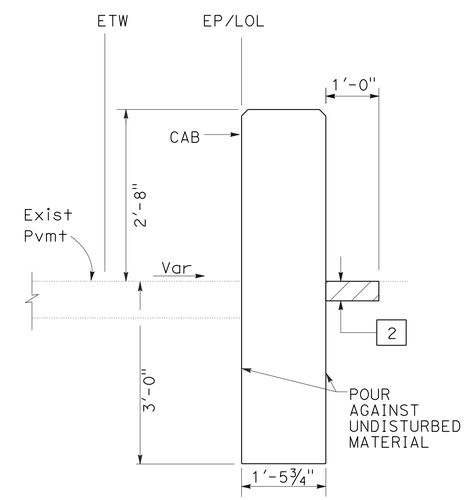

SECTION F-F

ABBREVIATIONS:

BPA	BEGIN PARABOLA
CAB	CONCRETE ANCHOR BLOCK
Ctr	CONTROL
EAA	END ANCHOR ASSEMBLY
Dir	DIRECTION
EPA	END PARABOLA
FLARED	CALTRANS APPROVED ALTERNATIVE FLARED TERMINAL SYSTEM
Grail	GUARDRAIL
TR	TRANSITION RAILING (TYPE WB-31)
TSy	TERMINAL SYSTEM
Veg	VEGETATION

NOTES:

1. SEE REVISED STANDARD PLAN RSP A77N5 FOR MGS TYPICAL Veg Ctr STANDARD RAILING SECTION.
2. SEE REVISED STANDARD PLAN RSP A77N6 FOR MGS TYPICAL Veg Ctr FOR TERMINAL SYSTEM END TREATMENTS.

CONSTRUCTION DETAILS

NO SCALE

C-1

STATE OF CALIFORNIA - DEPARTMENT OF TRANSPORTATION
Caltrans® TRAFFIC DESIGN

FUNCTIONAL SUPERVISOR: MOHAMMED CHOWDHURY
CALCULATED-DESIGNED BY: JAMES M. CANALITA
CHECKED BY: ANH D. NGUYEN
REVISED BY
DATE REVISED

S:\design\29740\traffic\FINAL PLANS 4_1_16\729740ga001.dgn

LAST REVISION 00-00-00
DATE PLOTTED => 30-AUG-2016
TIME PLOTTED => 12:23

Dist	COUNTY	ROUTE	POST MILES TOTAL PROJECT	SHEET No.	TOTAL SHEETS
07	LA	105,110	R6.6/R8.0 13.2/14.7	6	93

REGISTERED CIVIL ENGINEER 6/21/16 DATE

7-1-16
PLANS APPROVAL DATE

REGISTERED PROFESSIONAL ENGINEER
ANH D. NGUYEN
No. 62370
Exp. 9/30/17
CIVIL
STATE OF CALIFORNIA

THE STATE OF CALIFORNIA OR ITS OFFICERS OR AGENTS SHALL NOT BE RESPONSIBLE FOR THE ACCURACY OR COMPLETENESS OF SCANNED COPIES OF THIS PLAN SHEET.

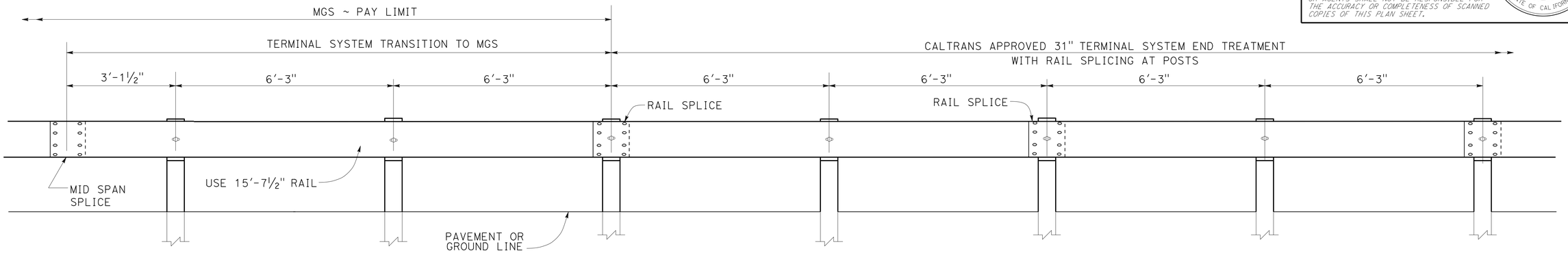

TRANSITION DETAIL FOR 31" TERMINAL SYSTEM END TREATMENT
WITH RAIL SPLICING AT POSTS TO MIDWEST GUARDRAIL SYSTEM

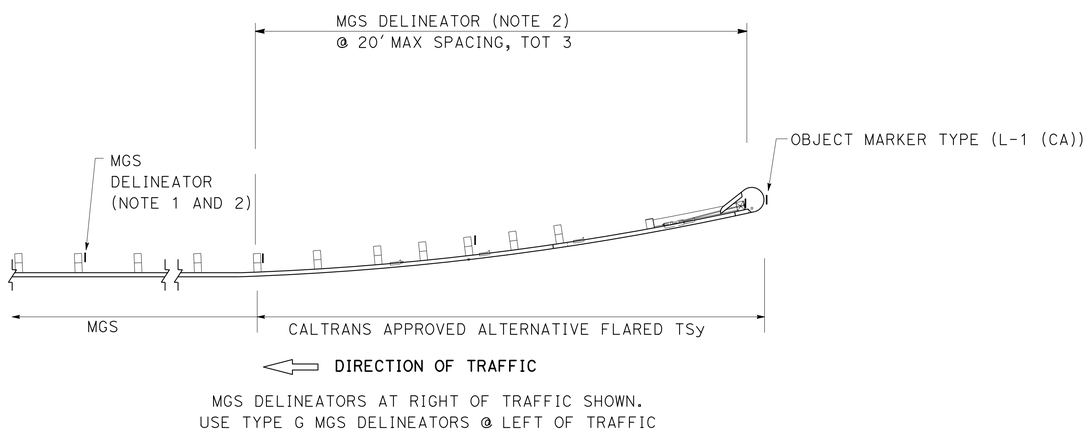

MGS DELINEATORS AT RIGHT OF TRAFFIC SHOWN.
USE TYPE G MGS DELINEATORS @ LEFT OF TRAFFIC

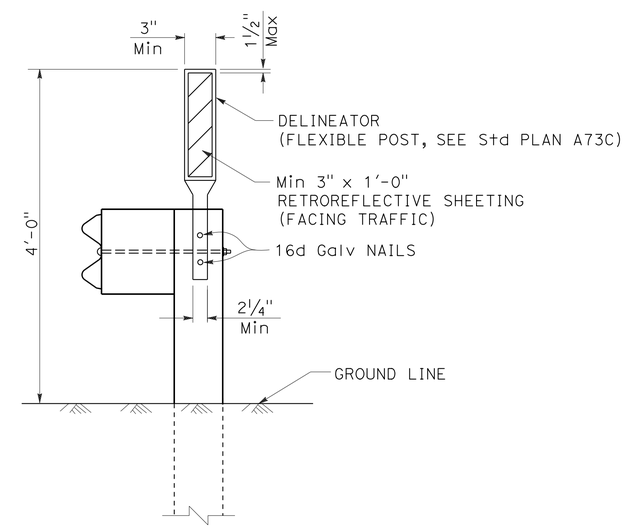

MGS DELINEATION

DELINEATORS AND OBJECT MARKERS FOR MGS AND CONCRETE BARRIER

NOTE:
1. INSTALL MGS DELINEATORS @ 30' MAXIMUM SPACING ON NON-TANGENT RAMP SHOULDERS. AND AT 200 FEET MAXIMUM ON TANGENT RAMP AND FREEWAY SECTIONS ON POSTS. NEARLY EQUAL SPACING.
2. USE MGS DELINEATOR (TYPE F) FOR MGS SYSTEM LOCATED AT RIGHT SHOULDER. USE MGS DELINEATOR (TYPE G) FOR MGS SYSTEM LOCATED AT LEFT SHOULDER.

CONSTRUCTION DETAILS
NO SCALE

C-2

REVISED BY | DATE REVISED
JAMES M. CANALITA | ANH D. NGUYEN
CALCULATED-DESIGNED BY | CHECKED BY
FUNCTIONAL SUPERVISOR
MOHAMMED CHOWDHURY

STATE OF CALIFORNIA - DEPARTMENT OF TRANSPORTATION
Caltrans TRAFFIC DESIGN

S:\design\37401\traffic\FINAL PLANS 4_1_16\729740ga002.dgn

LAST REVISION 00-00-00 | DATE PLOTTED => 30-AUG-2016 | TIME PLOTTED => 12:23

Dist	COUNTY	ROUTE	POST MILES TOTAL PROJECT	SHEET No.	TOTAL SHEETS
07	LA	105,110	R6.6/R8.0, 13.2/14.7	7	93

REGISTERED CIVIL ENGINEER 6/21/16 DATE

7-1-16
PLANS APPROVAL DATE

REGISTERED PROFESSIONAL ENGINEER ANH D. NGUYEN No. 62370 Exp. 9/30/17 CIVIL STATE OF CALIFORNIA

THE STATE OF CALIFORNIA OR ITS OFFICERS OR AGENTS SHALL NOT BE RESPONSIBLE FOR THE ACCURACY OR COMPLETENESS OF SCANNED COPIES OF THIS PLAN SHEET.

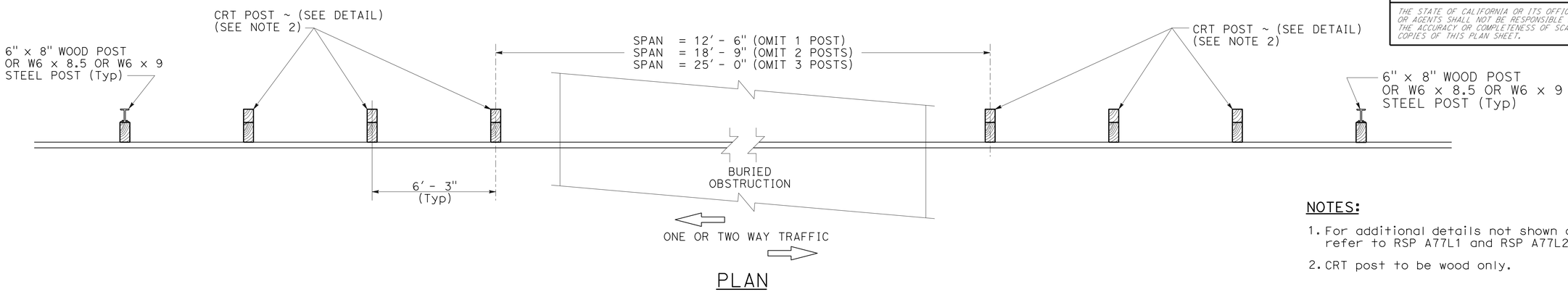

PLAN

NOTES:

1. For additional details not shown on this plan, refer to RSP A77L1 and RSP A77L2.
2. CRT post to be wood only.

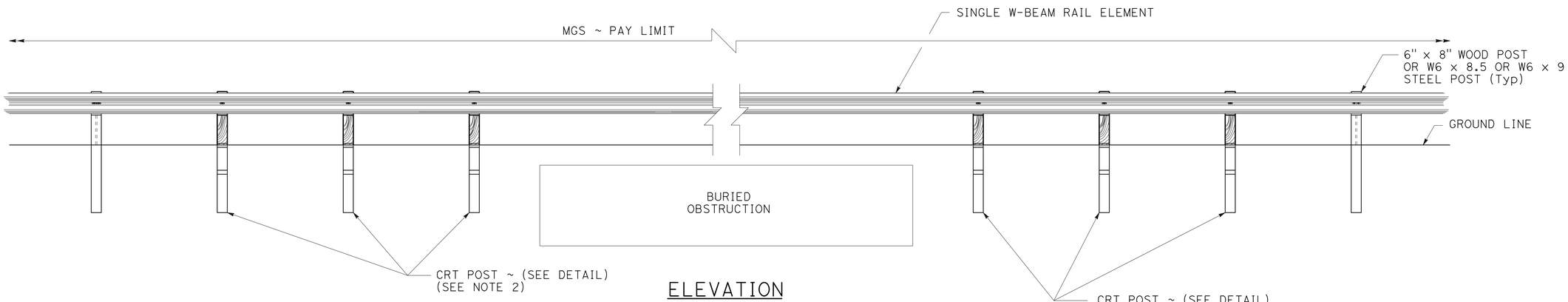

ELEVATION

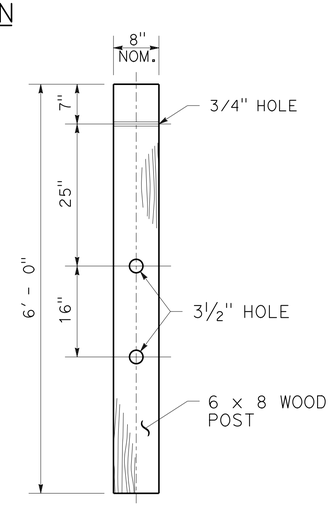

CONTROLLED RELEASING
TERMINAL (CRT) POST DETAIL

MIDWEST GUARDRAIL SYSTEM
OMIT POST DETAILS

CONSTRUCTION DETAIL
NO SCALE

C-3

REVISED BY	DATE REVISED

CALCULATED-DESIGNED BY	JAMES M. CANALITA
CHECKED BY	ANH D. NGUYEN
FUNCTIONAL SUPERVISOR	MOHAMMED CHOWDHURY

STATE OF CALIFORNIA - DEPARTMENT OF TRANSPORTATION
Caltrans® **TRAFFIC DESIGN**

S:\design\297401\traffic\FINAL PLANS 4_1_16\729740ga003.dgn

LAST REVISION 00-00-00 | DATE PLOTTED => 30-AUG-2016 | TIME PLOTTED => 12:23

Dist	COUNTY	ROUTE	POST MILES TOTAL PROJECT	SHEET No.	TOTAL SHEETS
07	LA	105,110	R6.6/R8.0 13.2/14.7	8	93

REGISTERED CIVIL ENGINEER 6/21/16 DATE

7-1-16
PLANS APPROVAL DATE

REGISTERED PROFESSIONAL ENGINEER
ANH D. NGUYEN
No. 62370
Exp. 9/30/17
CIVIL
STATE OF CALIFORNIA

THE STATE OF CALIFORNIA OR ITS OFFICERS OR AGENTS SHALL NOT BE RESPONSIBLE FOR THE ACCURACY OR COMPLETENESS OF SCANNED COPIES OF THIS PLAN SHEET.

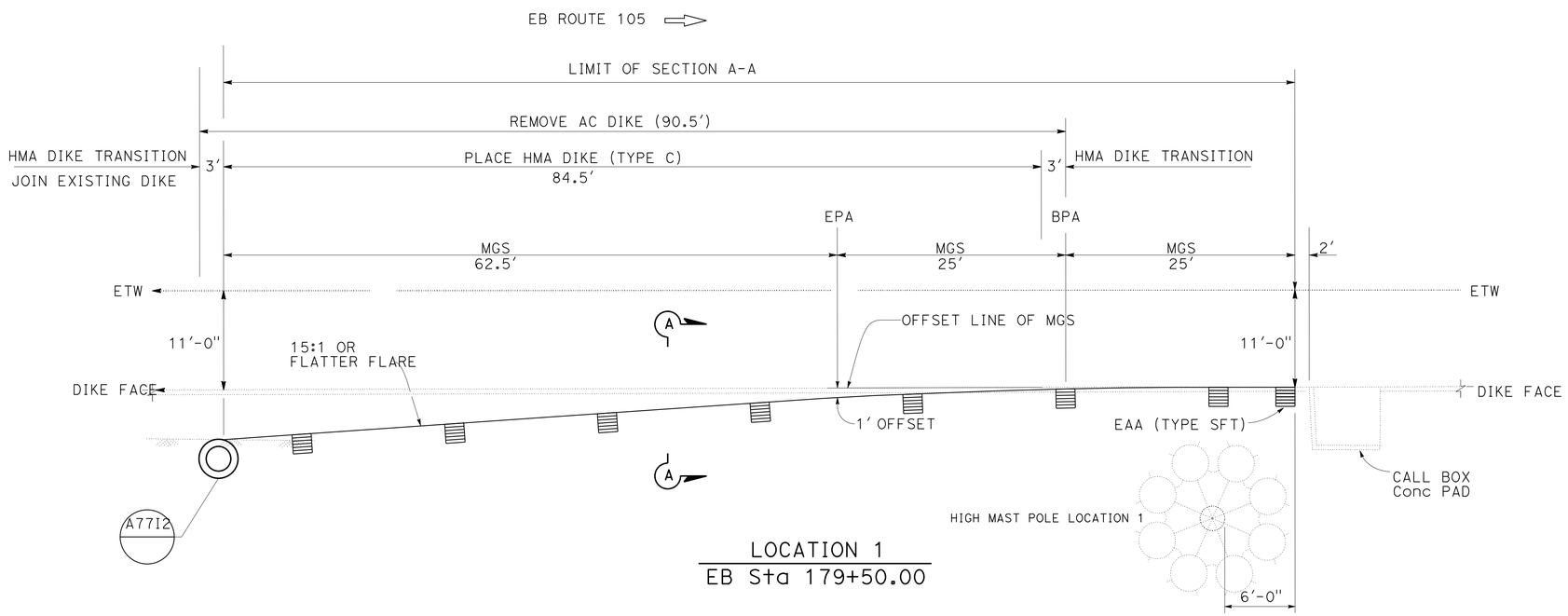

LOCATION 1
EB Sta 179+50.00

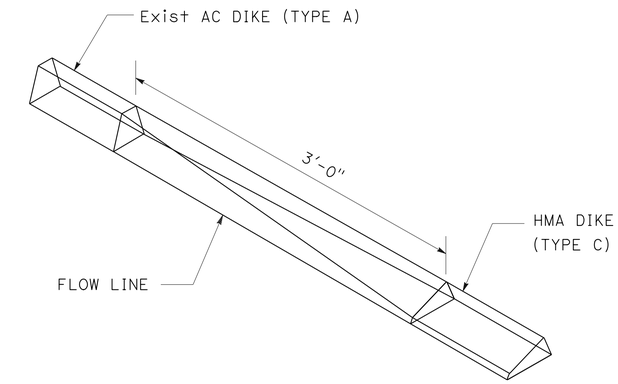

HMA DIKE TRANSITION
TYPE C TO Exist TYPE A

NOTE:
HMA DIKE TRANSITION PAID AS PLACE HMA DIKE (TYPE C)

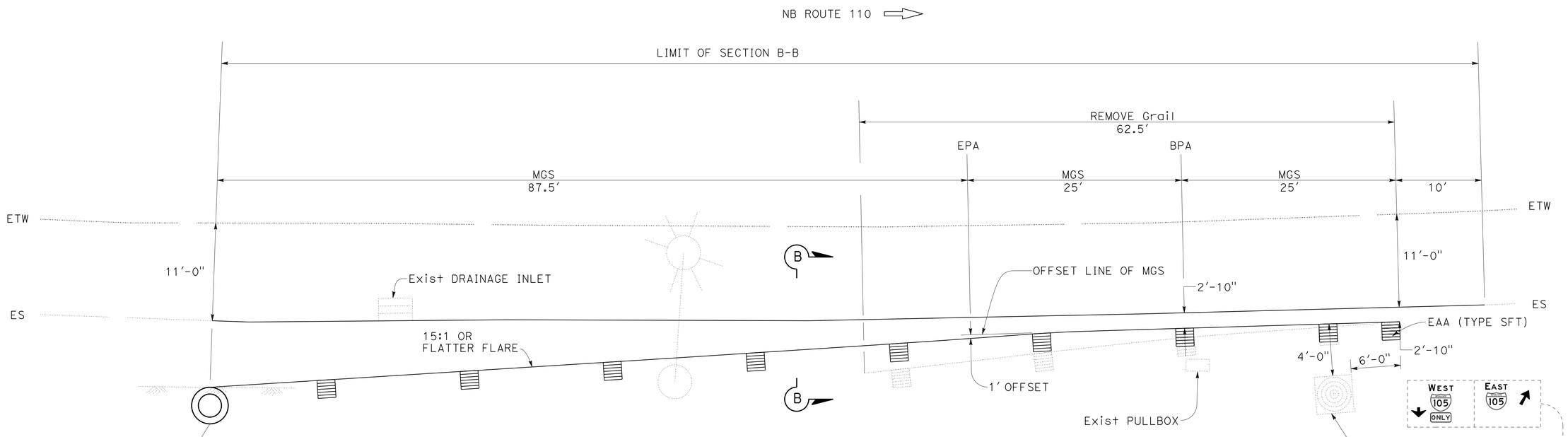

LOCATION 3
NB Sta 217+50.00

CONSTRUCTION DETAILS
NO SCALE

C-4

STATE OF CALIFORNIA - DEPARTMENT OF TRANSPORTATION
Caltrans® TRAFFIC DESIGN

FUNCTIONAL SUPERVISOR: MOHAMMED CHOWDHURY
CALCULATED-DESIGNED BY: JAMES M. CANALITA
CHECKED BY: ANH D. NGUYEN
REVISED BY
DATE REVISED

LAST REVISION 00-00-00
DATE PLOTTED => 30-AUG-2016
TIME PLOTTED => 12:23

Dist	COUNTY	ROUTE	POST MILES TOTAL PROJECT	SHEET No.	TOTAL SHEETS
07	LA	105,110	R6.6/R8.0 13.2/14.7	9	93

REGISTERED CIVIL ENGINEER 6/21/16 DATE

7-1-16
PLANS APPROVAL DATE

REGISTERED PROFESSIONAL ENGINEER
ANH D. NGUYEN
No. 62370
Exp. 9/30/17
CIVIL
STATE OF CALIFORNIA

THE STATE OF CALIFORNIA OR ITS OFFICERS OR AGENTS SHALL NOT BE RESPONSIBLE FOR THE ACCURACY OR COMPLETENESS OF SCANNED COPIES OF THIS PLAN SHEET.

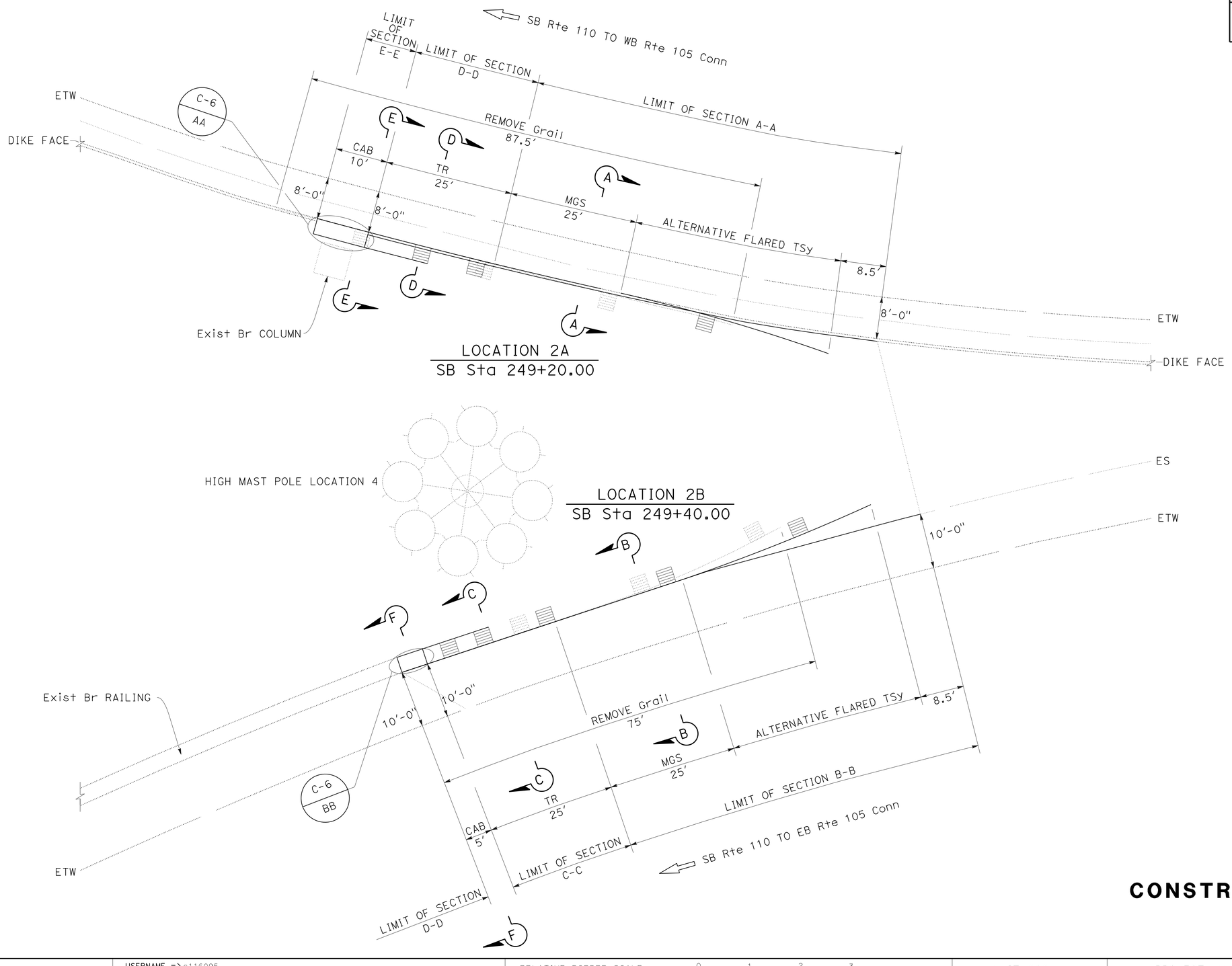

CONSTRUCTION DETAILS

NO SCALE

C-5

STATE OF CALIFORNIA - DEPARTMENT OF TRANSPORTATION
Caltrans® TRAFFIC DESIGN

FUNCTIONAL SUPERVISOR: MOHAMMED CHOWDHURY
CALCULATED-DESIGNED BY: JAMES M. CANALITA
CHECKED BY: ANH D. NGUYEN
REVISED BY
DATE REVISED

LAST REVISION 00-00-00
DATE PLOTTED => 30-AUG-2016
TIME PLOTTED => 12:23

Dist	COUNTY	ROUTE	POST MILES TOTAL PROJECT	SHEET No.	TOTAL SHEETS
07	LA	105,110	R6.6/R8.0 13.2/14.7	10	93

REGISTERED CIVIL ENGINEER 6/21/16 DATE

7-1-16
PLANS APPROVAL DATE

REGISTERED PROFESSIONAL ENGINEER
ANH D. NGUYEN
No. 62370
Exp. 9/30/17
CIVIL
STATE OF CALIFORNIA

THE STATE OF CALIFORNIA OR ITS OFFICERS OR AGENTS SHALL NOT BE RESPONSIBLE FOR THE ACCURACY OR COMPLETENESS OF SCANNED COPIES OF THIS PLAN SHEET.

NOTES:

1. YOU MUST VERIFY ALL CONTROLLING FIELD DIMENSIONS BEFORE ORDERING OR FABRICATING ANY MATERIAL.

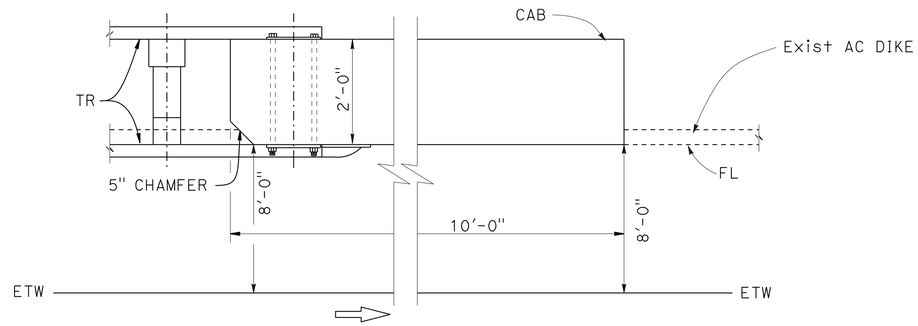

PLAN

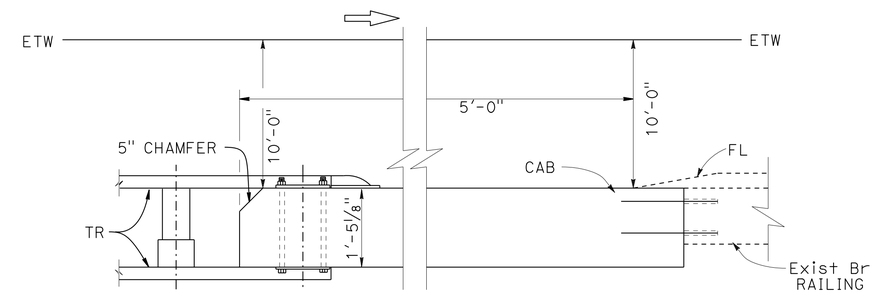

PLAN

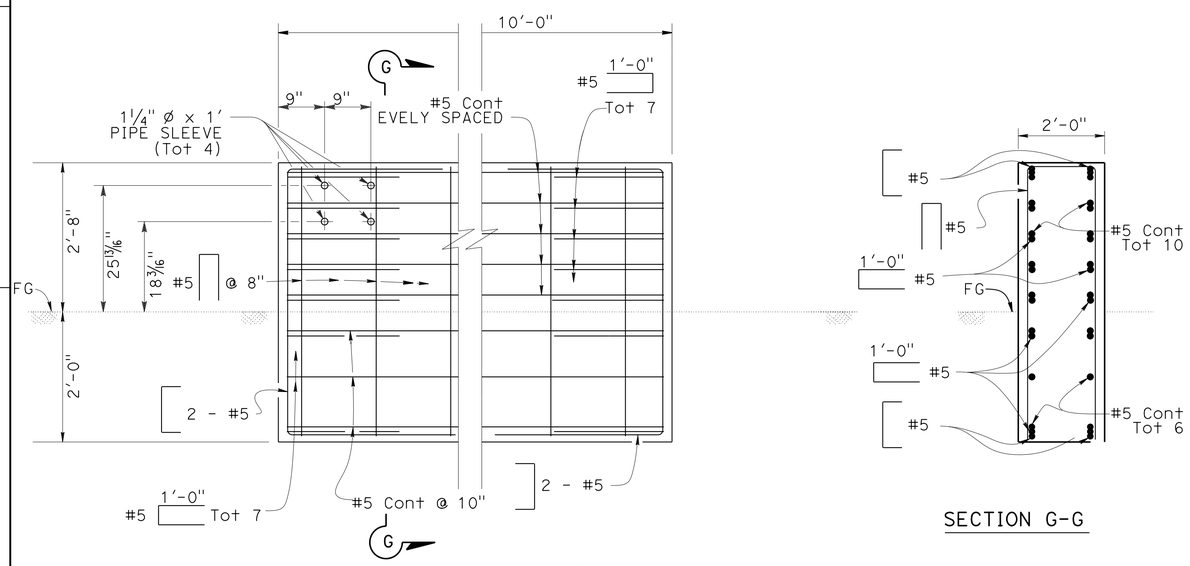

ELEVATION

SECTION G-G

LOCATION 2A SB Sta 249+20.00

PLAN (DETAIL AA)

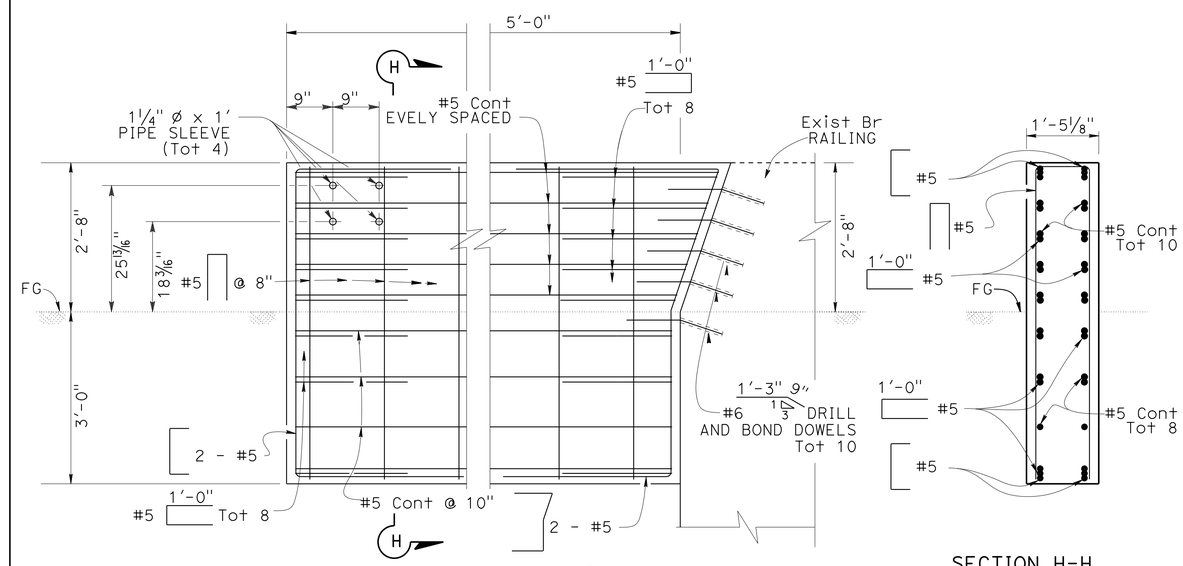

ELEVATION

SECTION H-H

LOCATION 2B SB Sta 249+40.00

PLAN (DETAIL BB)

CONSTRUCTION DETAILS

NO SCALE

C-6

REVISED BY	DATE REVISED
JAMES M. CANALITA	ANH D. NGUYEN
CALCULATED-DESIGNED BY	CHECKED BY
FUNCTIONAL SUPERVISOR	MOHAMMED CHOWDHURY

Caltrans® TRAFFIC DESIGN
STATE OF CALIFORNIA - DEPARTMENT OF TRANSPORTATION

S:\design\297401\traffic\FINAL PLANS 4_1_16\729740ga006.dgn

LAST REVISION 00-00-00 | DATE PLOTTED => 30-AUG-2016 | TIME PLOTTED => 12:23

Dist	COUNTY	ROUTE	POST MILES TOTAL PROJECT	SHEET No.	TOTAL SHEETS
07	LA	105,110	R6.6/R8.0, 13.2/14.7	11	93

N. Celina Aviles 7-12-16
REGISTERED CIVIL ENGINEER DATE

7-1-16
PLANS APPROVAL DATE

REGISTERED PROFESSIONAL ENGINEER N. CELINA AVILES No. 57106 Exp. 12/31/17 CIVIL STATE OF CALIFORNIA

THE STATE OF CALIFORNIA OR ITS OFFICERS OR AGENTS SHALL NOT BE RESPONSIBLE FOR THE ACCURACY OR COMPLETENESS OF SCANNED COPIES OF THIS PLAN SHEET.

NOTES:

1. POTHOLES SHOWN ON THESE PLANS ARE BASED ON THE FOLLOWING CONTROL INFORMATION:
   HORIZONTAL - CCS 83 ZONE 5
   VERTICAL - NAVD 1988
2. GAS PRESSURE : ALL GAS MAIN OPERATING MEDIUM (M) PRESSURE 60 PSIG AND UNDER EXCEPT WHERE NOTED.
3. ALL OVERHEAD AND UNDERGROUND POWER LINES ARE 12KV, STREET LIGHTS ARE 120/240V
4. UTILITY OWNERSHIP ON THIS PROJECT:
   ELECTRIC - LOS ANGELES DEPARTMENT OF WATER AND POWER (LADWP (P))
   GAS - SOUTHERN CALIFORNIA GAS COMPANY (SCG)
   SEWER - THE CITY OF LOS ANGELES (THE CITY OF LA)
   TELECOMMUNATION - AMERICAN TELEPHONE AND TELEGRAPH (AT&T)
   WATER - LOS ANGELES DEPARTMENT OF WATER AND POWER (LADWP (W))
5. SEE SHEET U-5 FOR POSITIVE LOCATION INFORMATION

ABBREVIATIONS:

AC	ASBESTOS CEMENT
CL	CEMENT LINED
M	MEDIUM GAS PRESSURE
PSIG	POUNDS PER SQUARE INCH GAUGE
VCP	VITRIFIED CLAY PIPE

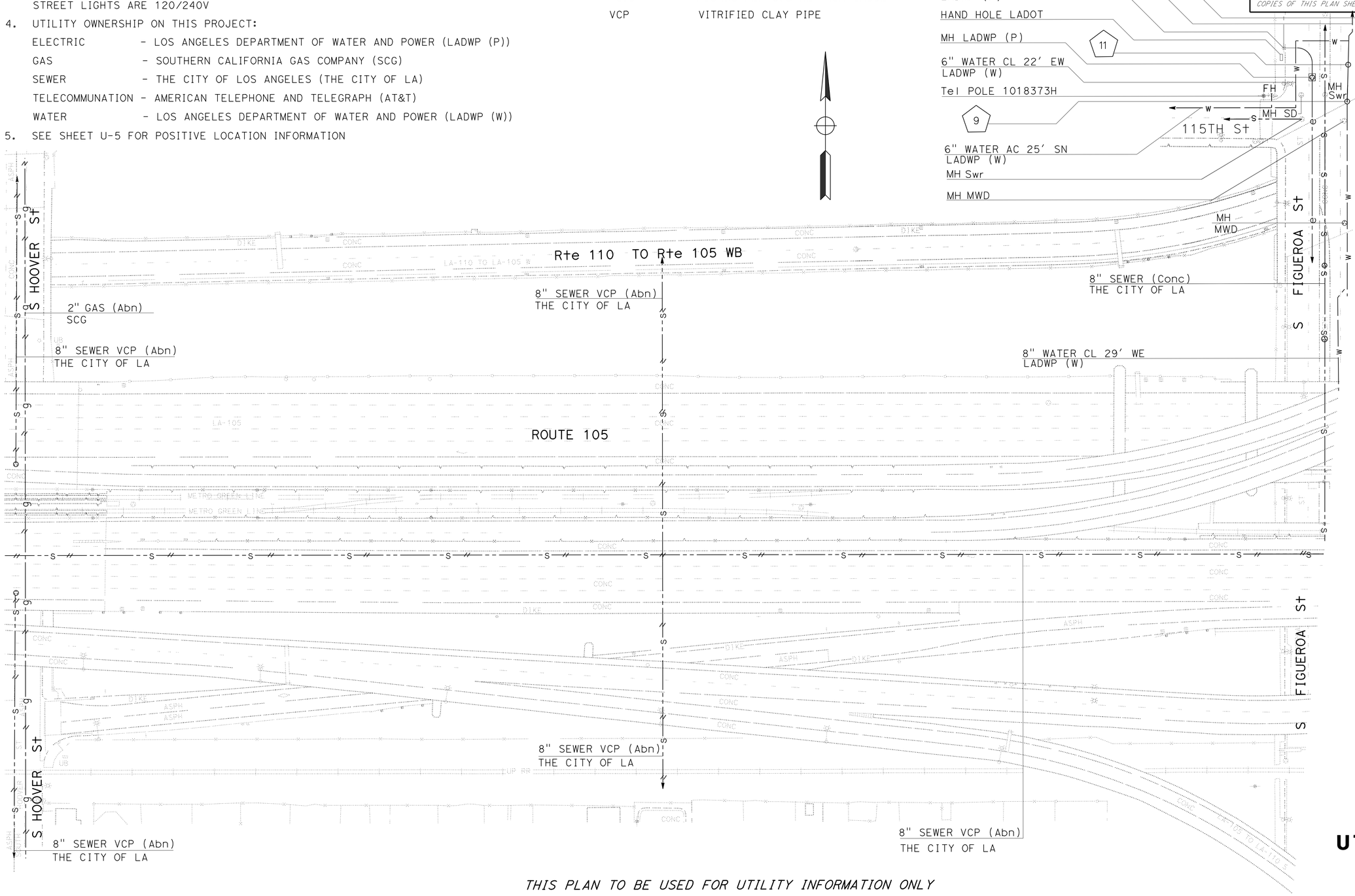

THIS PLAN TO BE USED FOR UTILITY INFORMATION ONLY

UTILITY PLAN

SCALE: 1" = 50'

U-1

REVISED BY	DATE REVISED

DAWN DANIELS — CALCULATED-DESIGNED BY
CELINA AVILES — CHECKED BY
ZOE YUE — FUNCTIONAL SUPERVISOR

STATE OF CALIFORNIA - DEPARTMENT OF TRANSPORTATION
Caltrans® OFFICE OF DESIGN A

LAST REVISION 00-00-00 | DATE PLOTTED => 30-AUG-2016 | TIME PLOTTED => 12:23

Dist	COUNTY	ROUTE	POST MILES TOTAL PROJECT	SHEET No.	TOTAL SHEETS
07	LA	105,110	R6.6/R8.0 13.2/14.7	12	93

N. Celina Aviles 7-12-16
REGISTERED CIVIL ENGINEER DATE

7-1-16
PLANS APPROVAL DATE

REGISTERED PROFESSIONAL ENGINEER
N. CELINA AVILES
No. 57106
Exp. 12/31/17
CIVIL
STATE OF CALIFORNIA

THE STATE OF CALIFORNIA OR ITS OFFICERS OR AGENTS SHALL NOT BE RESPONSIBLE FOR THE ACCURACY OR COMPLETENESS OF SCANNED COPIES OF THIS PLAN SHEET.

NOTE:

1. POTHOLES SHOWN ON THESE PLANS ARE BASED ON THE FOLLOWING CONTROL INFORMATION:
   HORIZONTAL - CCS 83 ZONE 5
   VERTICAL - NAVD 1988

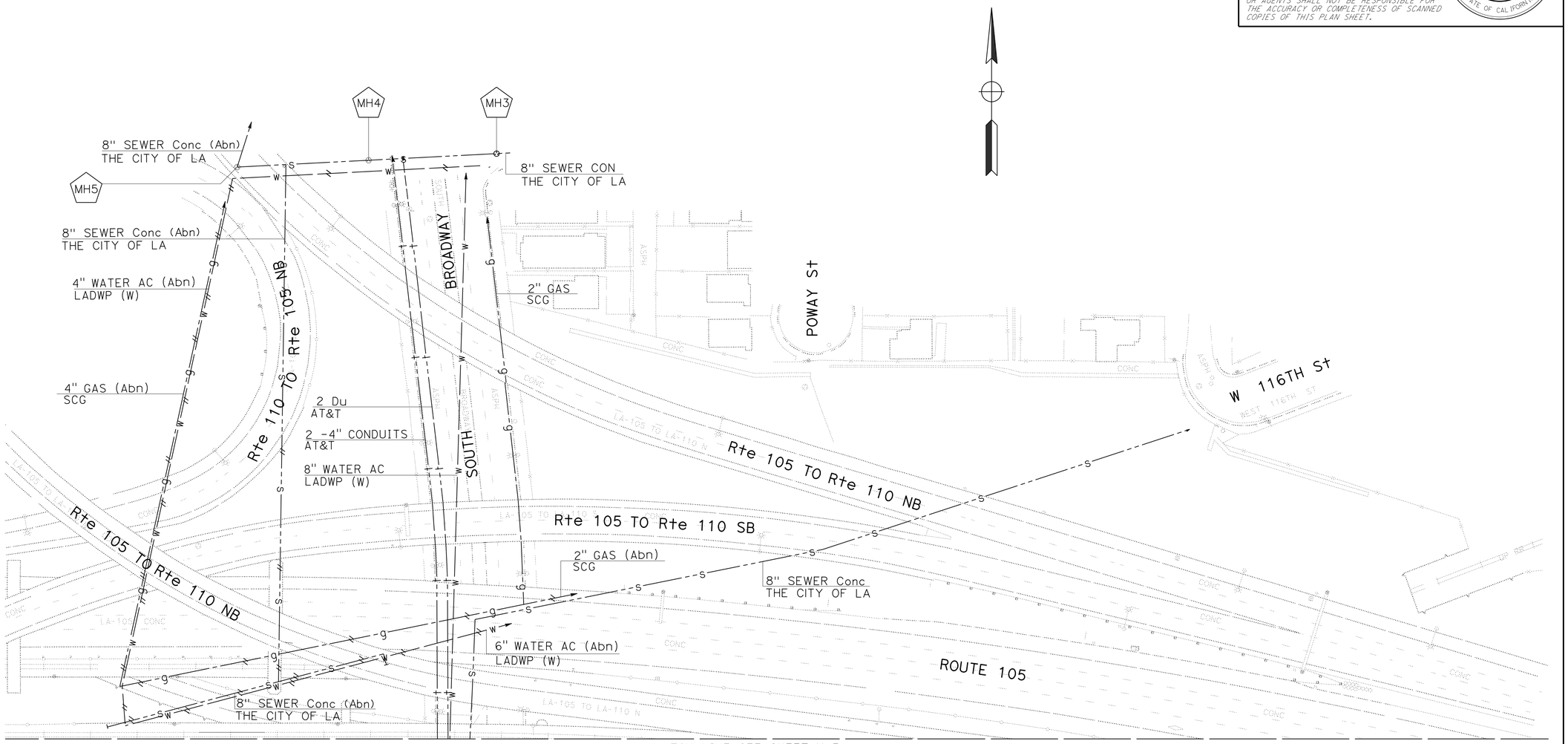

MATCH LINE SEE SHEET U-3

UTILITY PLAN

SCALE: 1" = 50'

U-2

THIS PLAN TO BE USED FOR UTILITY INFORMATION ONLY

STATE OF CALIFORNIA - DEPARTMENT OF TRANSPORTATION
Caltrans OFFICE OF DESIGN A

FUNCTIONAL SUPERVISOR: ZOE YUE
CALCULATED-DESIGNED BY: DAWN DANIELS
CHECKED BY: CELINA AVILES
REVISED BY
DATE REVISED

LAST REVISION 00-00-00
DATE PLOTTED => 30-AUG-2016
TIME PLOTTED => 12:23

Dist	COUNTY	ROUTE	POST MILES TOTAL PROJECT	SHEET No.	TOTAL SHEETS
07	LA	105,110	R6.6/R8.0, 13.2/14.7	13	93

N. Celina Aviles 7-12-16
REGISTERED CIVIL ENGINEER DATE

7-1-16
PLANS APPROVAL DATE

REGISTERED PROFESSIONAL ENGINEER
N. CELINA AVILES
No. 57106
Exp 12/31/17
CIVIL
STATE OF CALIFORNIA

THE STATE OF CALIFORNIA OR ITS OFFICERS OR AGENTS SHALL NOT BE RESPONSIBLE FOR THE ACCURACY OR COMPLETENESS OF SCANNED COPIES OF THIS PLAN SHEET.

NOTE:

1. POTHOLES SHOWN ON THESE PLANS ARE BASED ON THE FOLLOWING CONTROL INFORMATION:
   HORIZONTAL - CCS 83 ZONE 5
   VERTICAL - NAVD 1988

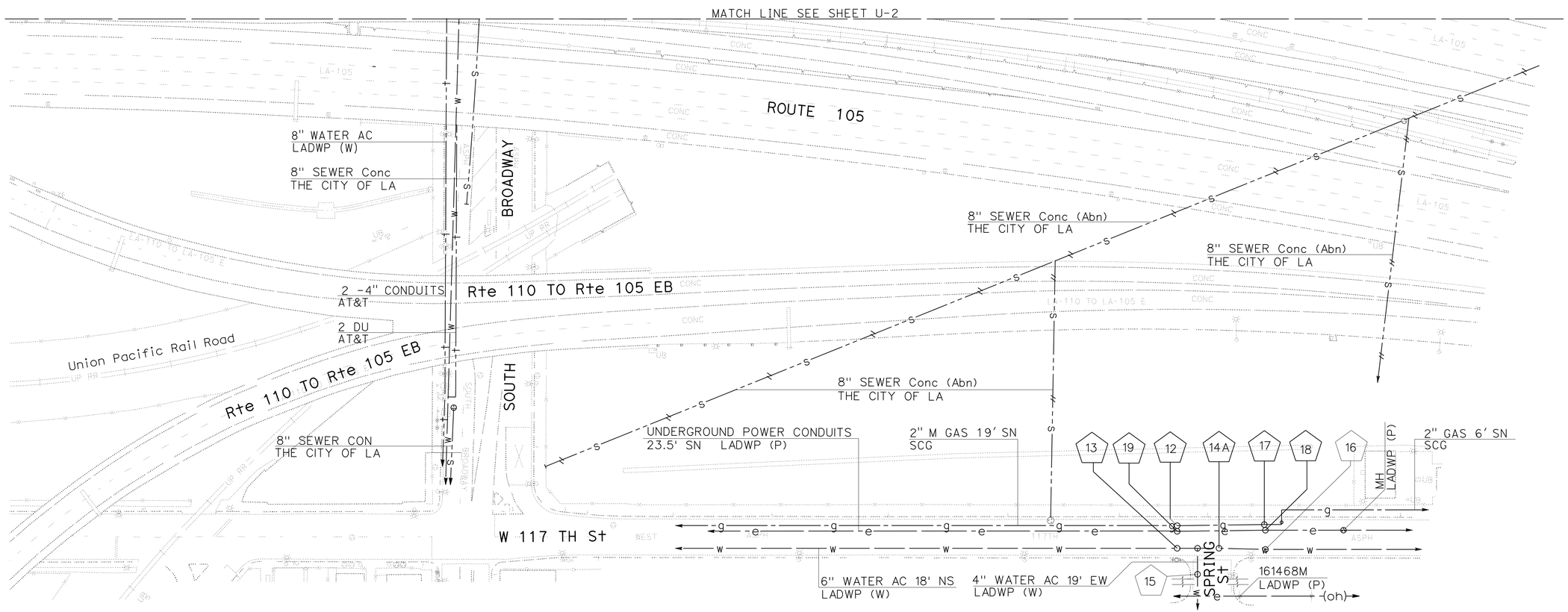

THIS PLAN TO BE USED FOR UTILITY INFORMATION ONLY

UTILITY PLAN

SCALE: 1" = 50'

U-3

STATE OF CALIFORNIA - DEPARTMENT OF TRANSPORTATION
Caltrans® OFFICE OF DESIGN A

FUNCTIONAL SUPERVISOR: ZOE YUE
CALCULATED-DESIGNED BY: DAWN DANIELS
CHECKED BY: CELINA AVILES
REVISED BY
DATE REVISED

LAST REVISION 00-00-00
DATE PLOTTED => 30-AUG-2016
TIME PLOTTED => 12:23

Dist	COUNTY	ROUTE	POST MILES TOTAL PROJECT	SHEET No.	TOTAL SHEETS
07	LA	105,110	R6.6/R8.0, 13.2/14.7	14	93

N. Celina Aviles 7-12-16
REGISTERED CIVIL ENGINEER DATE

7-1-16
PLANS APPROVAL DATE

REGISTERED PROFESSIONAL ENGINEER N. CELINA AVILES No. 57106 Exp. 12/31/17 CIVIL STATE OF CALIFORNIA

THE STATE OF CALIFORNIA OR ITS OFFICERS OR AGENTS SHALL NOT BE RESPONSIBLE FOR THE ACCURACY OR COMPLETENESS OF SCANNED COPIES OF THIS PLAN SHEET.

NOTE:

1. POTHOLES SHOWN ON THESE PLANS ARE BASED ON THE FOLLOWING CONTROL INFORMATION:
   HORIZONTAL - CCS 83 ZONE 5
   VERTICAL - NAVD 1988

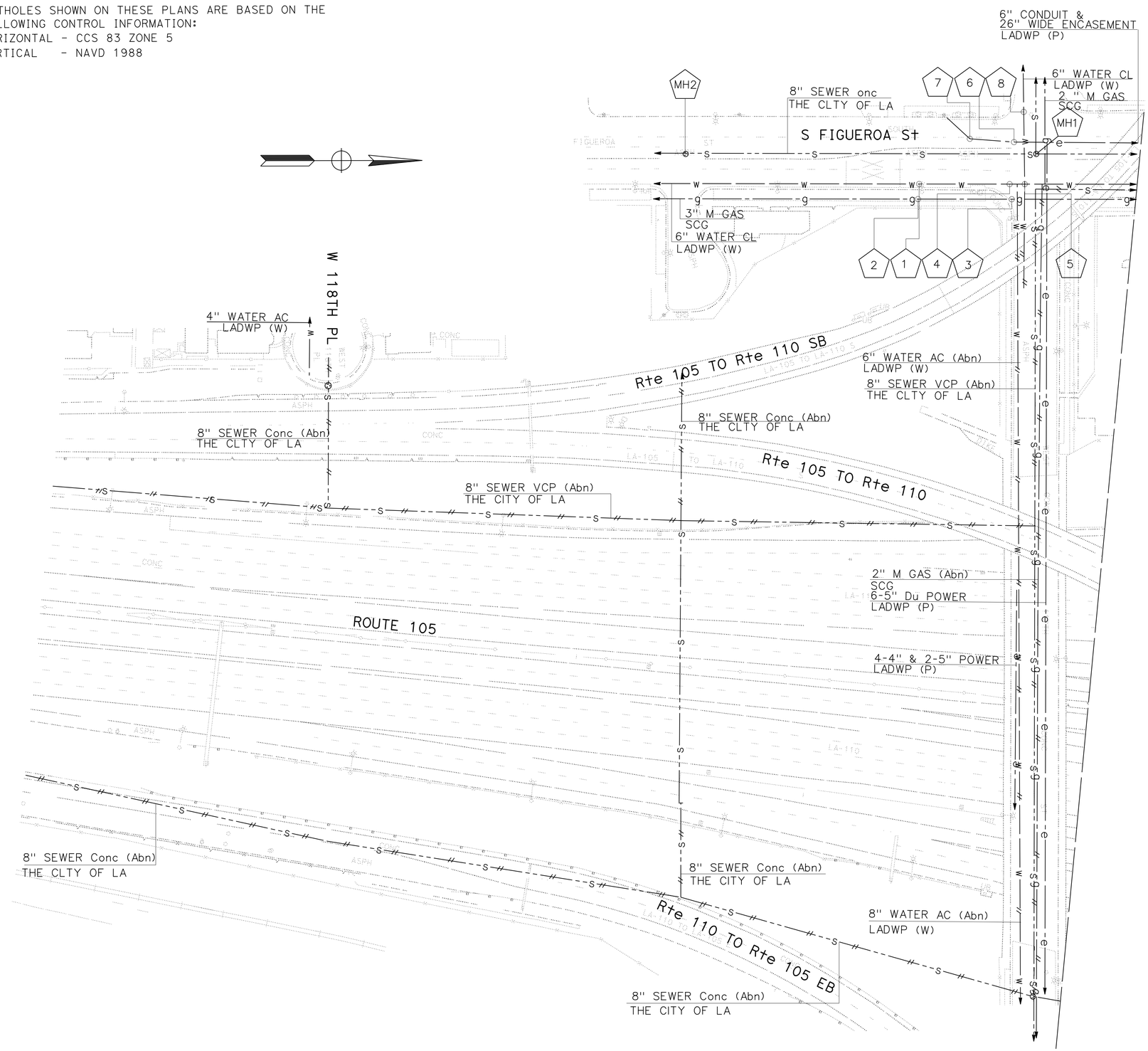

THIS PLAN TO BE USED FOR UTILITY INFORMATION ONLY

UTILITY PLAN

SCALE: 1" = 50'

U-4

STATE OF CALIFORNIA - DEPARTMENT OF TRANSPORTATION
Caltrans® OFFICE OF DESIGN A

FUNCTIONAL SUPERVISOR: ZOE YUE
CALCULATED-DESIGNED BY: DAWN DANIELS
CHECKED BY: CELINA AVILES
REVISED BY
DATE REVISED

LAST REVISION 00-00-00
DATE PLOTTED => 30-AUG-2016
TIME PLOTTED => 12:23

Dist	COUNTY	ROUTE	POST MILES TOTAL PROJECT	SHEET No.	TOTAL SHEETS
07	LA	105,110	R6.6/R8.0 13.2/14.7	15	93

N. Celina Aviles 7-12-16
REGISTERED CIVIL ENGINEER DATE

7-1-16
PLANS APPROVAL DATE

REGISTERED PROFESSIONAL ENGINEER N. CELINA AVILES No. 57106 Exp. 12/31/17 CIVIL STATE OF CALIFORNIA

THE STATE OF CALIFORNIA OR ITS OFFICERS OR AGENTS SHALL NOT BE RESPONSIBLE FOR THE ACCURACY OR COMPLETENESS OF SCANNED COPIES OF THIS PLAN SHEET.

NOTE:

1. POTHOLES SHOWN ON THESE PLANS ARE BASED ON THE FOLLOWING CONTROL INFORMATION:
   HORIZONTAL - SPC CA ZONE 5, 1991 DATUM
   VERTICAL - NAVD88

POSITIVE LOCATION INFORMATION SHEET U-1

NO.	UTILITY FACILITIES UTILITY COMPANY	SURFACE/ GROUND ELEVATION	DEPTH OF COVER	METHOD	NORTHING/EASTING
9	16.5" STEEL CASING WATER LOS ANGELES DEPT OF WATER & POWER	163.945	3.680′	POTHOLE	1796961.000′ 6475963.000′
11	16.5" STEEL CASING WATER LOS ANGELES DEPT OF WATER & POWER	163.598	3.400′	POTHOLE	1796999.000′ 6475964.000′

POSITIVE LOCATION INFORMATION SHEET U-2/U-3

NO.	UTILITY FACILITIES UTILITY COMPANY	SURFACE/ GROUND ELEVATION	DEPTH OF COVER	METHOD	NORTHING/EASTING
12	2" M STEEL GAS SOUTHERN CALIFORNIA GAS	143.534	3.120′	POTHOLE	1796074.000′ 6477888.000′
13	6" AC WATER LOS ANGELES DEPT OF WATER & POWER	142.401	2.700′	POTHOLE	1796054.000′ 6477888.000′
14	6" AC WATER LOS ANGELES DEPT OF WATER & POWER	142.374	2.640′	POTHOLE	1796054.000′ 6477925.000′
14A	4" AC WATER & 6" AC WATER LOS ANGELES DEPT OF WATER & POWER	142.385	2.640′	POTHOLE	1796054.000′ 6477906.000′
15	6" AC WATER LOS ANGELES DEPT OF WATER & POWER	142.214	3.163′	POTHOLE	1796031.000′ 6477906.000′
16	6" AC WATER LOS ANGELES DEPT OF WATER & POWER	142.358	2.900′	POTHOLE	1796053.000′ 6477966.000′
17	2" M STEEL GAS SOUTHERN CALIFORNIA GAS	143.105	3.020′	POTHOLE	1796075.000′ 6477965.000′
18	36" WIDE CONCRETE ENCASEMENT (P) LOS ANGELES DEPT OF WATER & POWER	143.198	3.560′	POTHOLE	1796070.000′ 6477966.000′
19	36" WIDE CONCRETE ENCASEMENT (P) LOS ANGELES DEPT OF WATER & POWER	143.601	4.300′	POTHOLE	1796069.000′ 6477888.000′
MH3	SEWER MANHOLE THE CITY OF LOS ANGELES		12.780′		
MH4	SEWER MANHOLE THE CITY OF LOS ANGELES		15.690′		
MH5	SEWER MANHOLE THE CITY OF LOS ANGELES		16.380′		

POSITIVE LOCATION INFORMATION SHEET U-4

NO.	UTILITY FACILITIES UTILITY COMPANY	SURFACE/ GROUND ELEVATION	DEPTH OF COVER	METHOD	NORTHING/EASTING
1	8" AC WATER LOS ANGELES DEPT OF WATER & POWER	177.405	3.200′	POTHOLE	1795957.000′ 6475968.000′
2	3" M GAS SOUTHERN CALIFORNIA GAS	177.661	2.700′	POTHOLE	1795956.000′ 6475982.000′
3	3" M GAS SOUTHERN CALIFORNIA GAS	175.866	2.420′	POTHOLE	1796043.000′ 6475982.000′
4	8" AC WATER LOS ANGELES DEPT OF WATER & POWER	176.415	3.160′	POTHOLE	1796041.000′ 6475968.000′
5	6" AC WATER & 8" AC WATER LOS ANGELES DEPT OF WATER & POWER	176.156	3.600′	POTHOLE	1796055.000′ 6475968.000′
6	6" PVC/26" WIDE ENCASED POWER LOS ANGELES DEPT OF WATER & POWER	177.032	6.760′	POTHOLE	1796045.000′ 6475929.000′
7	SLURRY BANK (P) LOS ANGELES DEPT OF WATER & POWER	177.802	0.900′	POTHOLE	1796004.000′ 6475926.000′
8	6" AC WATER LOS ANGELES DEPT OF WATER & POWER	176.626	2.700′	POTHOLE	1796054.000′ 6475901.000′
MH3	SEWER MANHOLE THE CITY OF LOS ANGELES		8.640′		
MH4	SEWER MANHOLE THE CITY OF LOS ANGELES		8.170′		

UTILITY PLAN
U-5

STATE OF CALIFORNIA - DEPARTMENT OF TRANSPORTATION
Caltrans® OFFICE OF DESIGN A

FUNCTIONAL SUPERVISOR: ZOE YUE
CALCULATED-DESIGNED BY: DAWN DANIELS
CHECKED BY: CELINA AVILES
REVISED BY
DATE REVISED

LAST REVISION 01-09-15
DATE PLOTTED => 30-AUG-2016
TIME PLOTTED => 12:23

DIST	COUNTY	ROUTE	POST MILES TOTAL PROJECT	SHEET No.	TOTAL SHEETS
07	LA	105,110	R6.6/R8.0 13.2/14.7	16	93

REGISTERED CIVIL ENGINEER 6/21/16 DATE

7-1-16
PLANS APPROVAL DATE

REGISTERED PROFESSIONAL ENGINEER
ANH D. NGUYEN
No. 62370
Exp. 9/30/17
CIVIL
STATE OF CALIFORNIA

THE STATE OF CALIFORNIA OR ITS OFFICERS OR AGENTS SHALL NOT BE RESPONSIBLE FOR THE ACCURACY OR COMPLETENESS OF SCANNED COPIES OF THIS PLAN SHEET.

NOTES: 1. LOCATION OF CONSTRUCTION AREA SIGNS SHOWN ARE APPROXIMATE.
2. EXACT LOCATIONS WILL BE DETERMINED BY THE ENGINEER.

SIGN CODE LEGEND:

XXYY-Y: FEDERAL SIGN CODE PER MANUAL ON UNIFORM TRAFFIC CONTROL DEVICES (MUTCD)

XXYY-Y (CA): CALIFORNIA SIGN CODE PER CALIFORNIA MUTCD

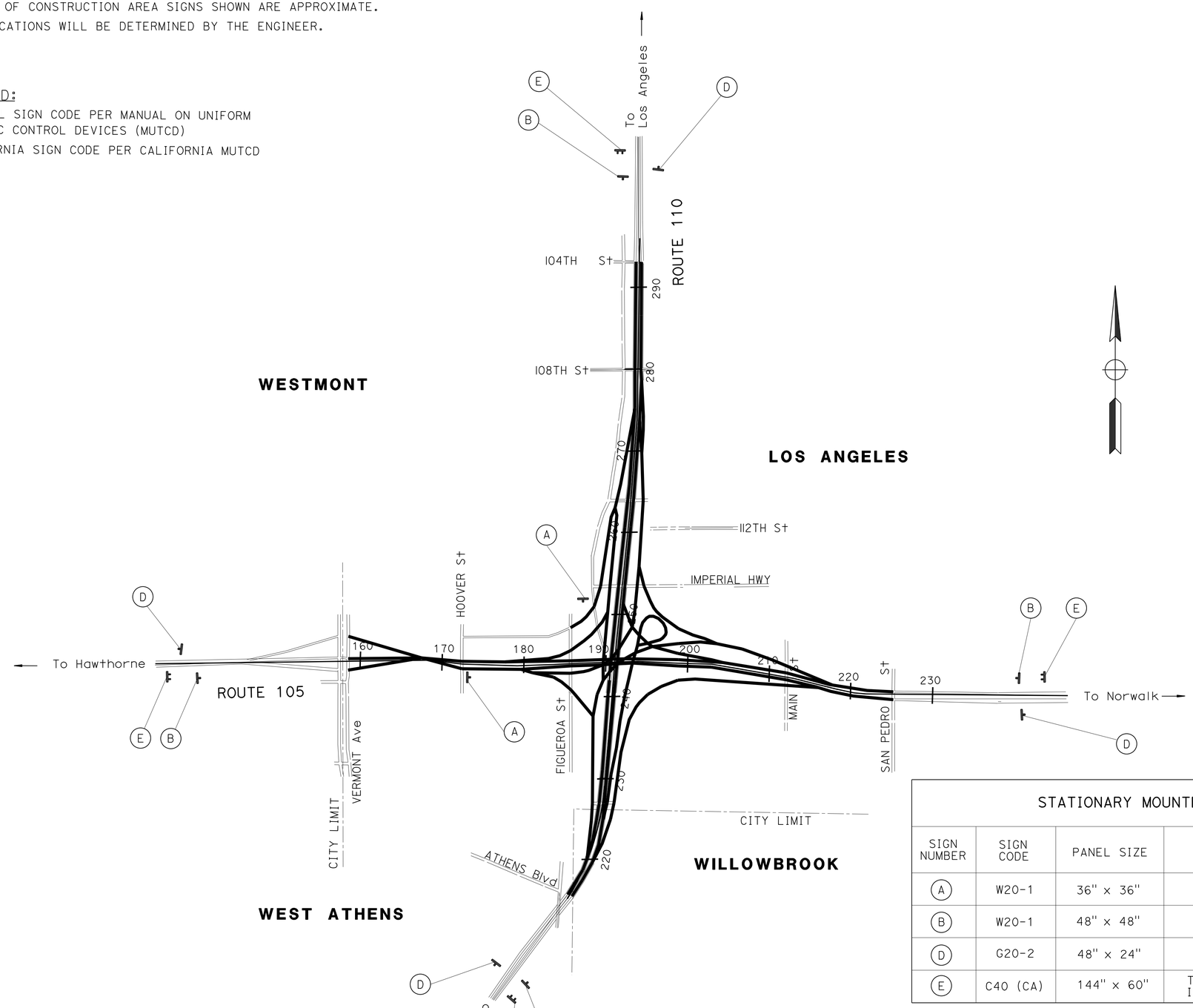

STATIONARY MOUNTED CONSTRUCTION AREA SIGNS					
SIGN NUMBER	SIGN CODE	PANEL SIZE	SIGN MESSAGE	NUMBER OF POSTS AND SIZE	NUMBER OF SIGNS
A	W20-1	36" x 36"	ROAD WORK AHEAD	1 - 4" x 4"	2
B	W20-1	48" x 48"	ROAD WORK AHEAD	1 - 4" x 6"	4
D	G20-2	48" x 24"	END ROAD WORK	1 - 4" x 6"	4
E	C40 (CA)	144" x 60"	TRAFFIC FINES DOUBLED IN CONSTRUCTION ZONES	2 - 6" x 6"	4

CONSTRUCTION AREA SIGNS

NO SCALE

APPROVED FOR CONSTRUCTION AREA SIGN WORK ONLY

CS-1

REVISED BY | DATE REVISED
MOSTAFA ARYA | ANH D. NGUYEN
CALCULATED-DESIGNED BY | CHECKED BY
FUNCTIONAL SUPERVISOR: MOHAMMED CHOWDHURY
STATE OF CALIFORNIA - DEPARTMENT OF TRANSPORTATION
Caltrans® TRAFFIC DESIGN
S:\design\297401\trafficVFINAL PLANS 4_1_16\7297401a001.dgn

LAST REVISION 00-00-00 | DATE PLOTTED => 30-AUG-2016 | TIME PLOTTED => 12:23

Dist	COUNTY	ROUTE	POST MILES TOTAL PROJECT	SHEET No.	TOTAL SHEETS
07	LA	105,110	R6.6/R8.0 13.2/14.7	17	93

REGISTERED CIVIL ENGINEER 6-17-16 DATE

7-1-16
PLANS APPROVAL DATE

REGISTERED PROFESSIONAL ENGINEER DYARI AHMED No. 66868 Exp 9/30/16 CIVIL STATE OF CALIFORNIA

THE STATE OF CALIFORNIA OR ITS OFFICERS OR AGENTS SHALL NOT BE RESPONSIBLE FOR THE ACCURACY OR COMPLETENESS OF SCANNED COPIES OF THIS PLAN SHEET.

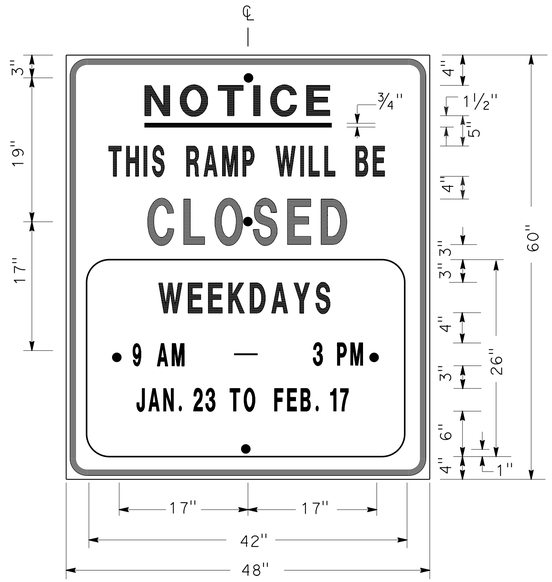

SIGN SP-1

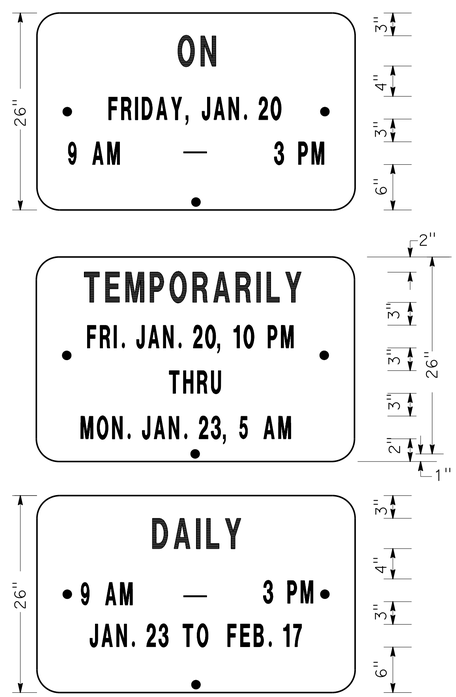

ALTERNATE OVERLAY PANELS (TYPICAL)

SPECIAL ADVANCE NOTICE PUBLICITY SIGN

NOTES: SIGN SP-1

1. LETTERS AND BORDER MUST BE BLACK ON REFLECTORIZED ORANGE BACKGROUND.
2. BOLT HOLES MUST BE 3/8" DIAMETER.
3. BASE MATERIAL MUST BE ALUMINUM (MINIMUM 0.06").
4. SIGNS MUST BE MOUNTED WITH BOTTOMS OF SIGNS A MINIMUM OF 7' ABOVE GROUND.

SIZE	BORDER WIDTH	MARGIN WIDTH	LETTER SIZE					CORNER RADIUS
			LINE 1	LINE 2*	LINE 3	LINE 4	LINE 5, 6, & 7*	
48"x60"	1 1/4"	3/4"	4E	4D	6E	4D		3"
42"x26"	OVERLAY						3D	1 1/2"
* CONDENSED SPACING IF NECESSARY								

SIGN SP-4

NOTES: SIGN SP-4

1. LETTERS - 6" SERIES C.
2. LETTERS AND BORDER MUST BE BLACK ON REFLECTORIZED WHITE BACKGROUND.
3. BOLT HOLES MUST BE 3/8" DIAMETER.
4. BASE MATERIAL MUST BE ALUMINUM (MINIMUM 0.06").
5. SIGNS MUST BE PLACED AT RAMP ENTRANCES IN ADDITION TO SIGNS POSTED IN ACCORDANCE WITH REVISED STANDARD PLAN RSP T14.

SPECIAL SIGN FOR ENTRANCE RAMP CLOSURES

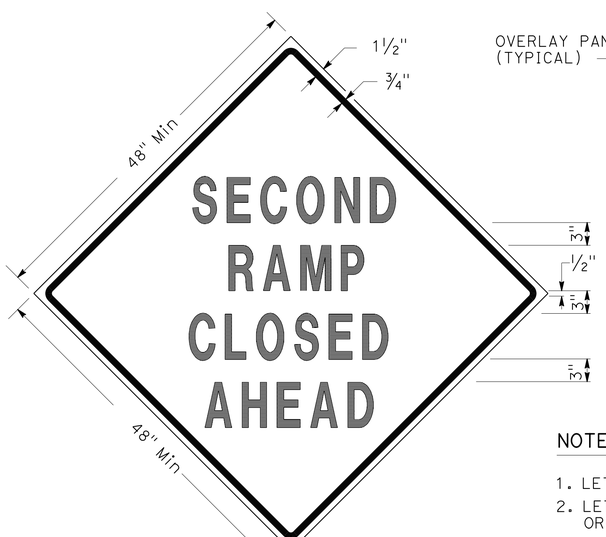

SIGN SP-3

SIGN SP-5

NOTES: SIGNS SP-3 & SP-5

1. LETTERS - 6" SERIES D.
2. LETTERS AND BORDER MUST BE BLACK ON REFLECTORIZED ORANGE BACKGROUND.
3. BOLT HOLES MUST BE 3/8" DIAMETER.
4. BASE MATERIAL MUST BE ALUMINUM (MINIMUM 0.06").
5. SIGNS MUST BE MOUNTED WITH BOTTOMS OF SIGNS A MINIMUM OF 7' ABOVE GROUND.
6. SIGN SP-5 MUST BE USED IF THE OFF-RAMP TO BE CLOSED FOLLOWS A FREEWAY OFF-CONNECTOR.

SPECIAL SIGNS FOR EXIT RAMP CLOSURES

TRAFFIC HANDLING DETAILS
TRAFFIC CONTROL SYSTEM FOR RAMP CLOSURES, DETOUR SIGNS, AND MISCELLANEOUS DETAILS
SHEET 1 OF 2

NO SCALE

THD-1

STATE OF CALIFORNIA - DEPARTMENT OF TRANSPORTATION
Caltrans DTM

FUNCTIONAL SUPERVISOR: SAM ESQUENAZI
CALCULATED-DESIGNED BY: JAY NASSER
CHECKED BY: DYARI AHMED
REVISED BY: JC
DATE REVISED: 2/14

LAST REVISION 00-00-00
DATE PLOTTED => 30-AUG-2016
TIME PLOTTED => 12:23

Dist	COUNTY	ROUTE	POST MILES TOTAL PROJECT	SHEET No.	TOTAL SHEETS
07	LA	105,110	R6.6/R8.0 13.2/14.7	18	93

REGISTERED CIVIL ENGINEER 6-17-16 DATE

7-1-16
PLANS APPROVAL DATE

REGISTERED PROFESSIONAL ENGINEER
DYARI AHMED
No. 66868
Exp 9/30/16
CIVIL
STATE OF CALIFORNIA

THE STATE OF CALIFORNIA OR ITS OFFICERS OR AGENTS SHALL NOT BE RESPONSIBLE FOR THE ACCURACY OR COMPLETENESS OF SCANNED COPIES OF THIS PLAN SHEET.

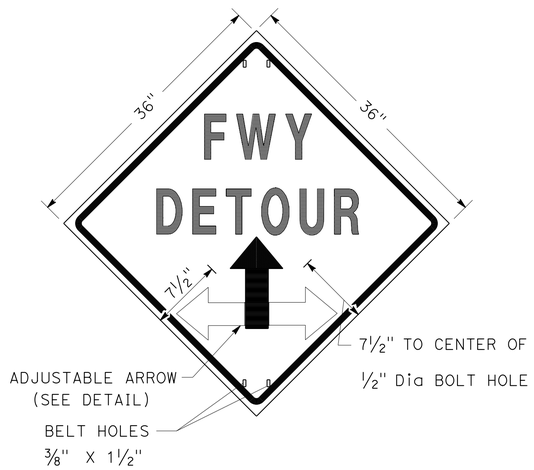

SIGN SP-2

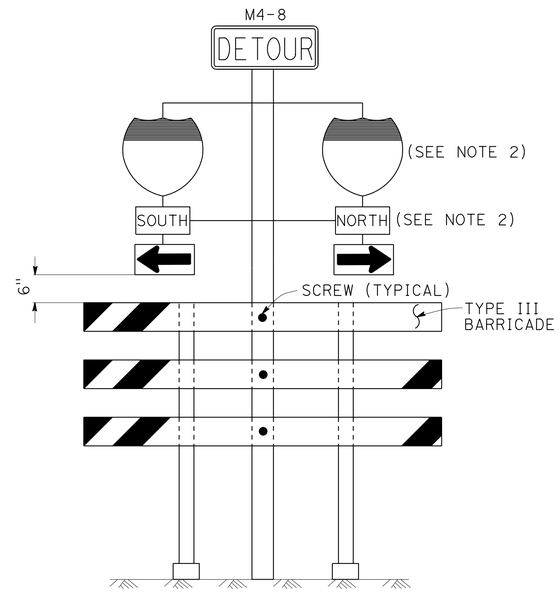

SIGN SP-6 (SEE NOTE 1)

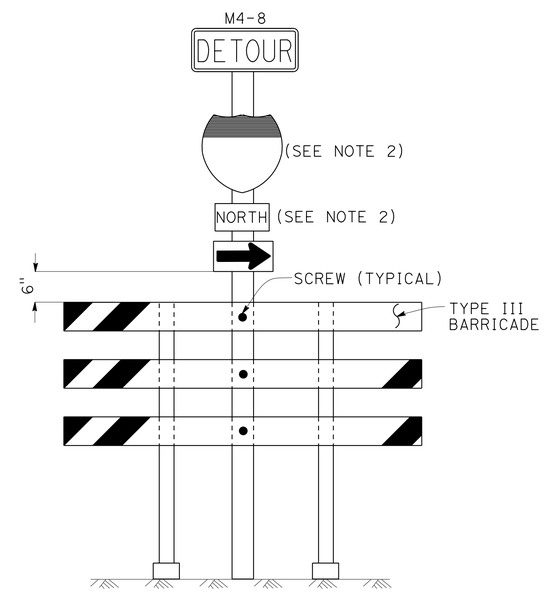

SIGN SP-7 (SEE NOTE 1)

NOTES: SIGN SP-2

1. LETTERS - 6" SERIES E.
2. LETTERS, BORDER AND ARROW - BLACK ON RETROREFLECTORIZED ORANGE BACKGROUND.
3. BASE MATERIAL FOR SIGNS AND ARROWS MUST BE ALUMINUM (MINIMUM 0.06").
4. BELTS (LUGGAGE STRAPS) MUST BE 1" WIDE BY 48" LONG, MADE OF COTTON OR POLYPROPYLENE WEB MATERIAL.
5. SIGNS MUST BE MOUNTED WITH BOTTOMS OF SIGNS A MINIMUM OF 7' ABOVE GROUND EXCEPT AS OTHERWISE SHOWN ON OTHER TRAFFIC HANDLING DETAILS PLANS.

NOTES: SIGNS SP-6 & SP-7

1. IN LIEU OF PLACING SIGNS ON TYPE III BARRICADES, SIGNS, INCLUDING POSTS, MAY BE PLACED INTO THE GROUND OR FASTENED ONTO ELECTROLIERS.
2. USE APPROPRIATE ROUTE MARKER [G26-2(CA), G27-2(CA), G28-2(CA)] AND CARDINAL DIRECTION [NORTH (M3-1), SOUTH (M3-3), EAST (M3-2), WEST (M3-4)].

SPECIAL PORTABLE FREEWAY DETOUR SIGNS

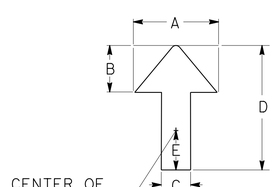

DIMENSIONS				
A	B	C	D	E
6"	3"	2"	8"	1"

ADJUSTABLE ARROW DETAIL

ABBREVIATION

(CA) CALIFORNIA CODE

TRAFFIC HANDLING DETAILS

TRAFFIC CONTROL SYSTEM FOR RAMP CLOSURES, DETOUR SIGNS, AND MISCELLANEOUS DETAILS

SHEET 2 OF 2

NO SCALE

THD-2

STATE OF CALIFORNIA - DEPARTMENT OF TRANSPORTATION
Caltrans® DTM

FUNCTIONAL SUPERVISOR: SAM ESQUENAZI
CALCULATED-DESIGNED BY: JAY NASSER
CHECKED BY: DYARI AHMED
REVISED BY: JC
DATE REVISED: 2/14

LAST REVISION 00-00-00 | DATE PLOTTED => 30-AUG-2016 | TIME PLOTTED => 12:23

Dist	COUNTY	ROUTE	POST MILES TOTAL PROJECT	SHEET No.	TOTAL SHEETS
07	LA	105,110	R6.6/R8.0 13.2/14.7	19	93

REGISTERED CIVIL ENGINEER 6-17-16 DATE

7-1-16
PLANS APPROVAL DATE

REGISTERED PROFESSIONAL ENGINEER
DYARI AHMED
No. 66868
Exp. 9/30/16
CIVIL
STATE OF CALIFORNIA

THE STATE OF CALIFORNIA OR ITS OFFICERS OR AGENTS SHALL NOT BE RESPONSIBLE FOR THE ACCURACY OR COMPLETENESS OF SCANNED COPIES OF THIS PLAN SHEET.

LEGEND

- SIGN SP-2
- AND/OR — DESIGNATED DETOUR ROUTE
- DETOUR DIRECTION
- CONTROLLED INTERSECTION

NOTES:

1. SP-2 SIGNS MAY BE STRAPPED ON EXISTING ELECTROLIER, SIGNAL POST OR SIGN POST.
2. SP-2 SIGNS MUST NOT BE INSTALLED ON BARRICADES EXCEPT AS OTHERWISE SHOWN.
3. SIGN LOCATIONS ARE APPROXIMATE. EXACT LOCATIONS WILL BE DETERMINED BY THE ENGINEER.
4. SP-2 SIGNS MUST BE POSTED AT EACH CONTROLLED INTERSECTION (EXCEPT AT COMMERCIAL PROPERTY, RESIDENTIAL COMPLEX OR T-INTERSECTION FROM ONE-WAY STREET) ALONG THE DESIGNATED DETOUR ROUTE.
5. UNLESS OTHERWISE SHOWN ON OTHER THD PLANS, WHEN CONTROLLED INTERSECTIONS ALONG THE DESIGNATED DETOUR ROUTE ARE CLOSELY SPACED, PLACE SP-2 SIGNS AT CONTROLLED INTERSECTIONS AT A DISTANCE NOT TO EXCEED 1/4 MILE FROM THE PRECEDING DETOUR SIGN.
6. EXCEPT AS OTHERWISE SHOWN ON OTHER PLANS OR SPECIFIED IN THE SPECIAL PROVISIONS, SP-2 SIGNS MUST BE PLACED AS SHOWN ON THIS PLAN.

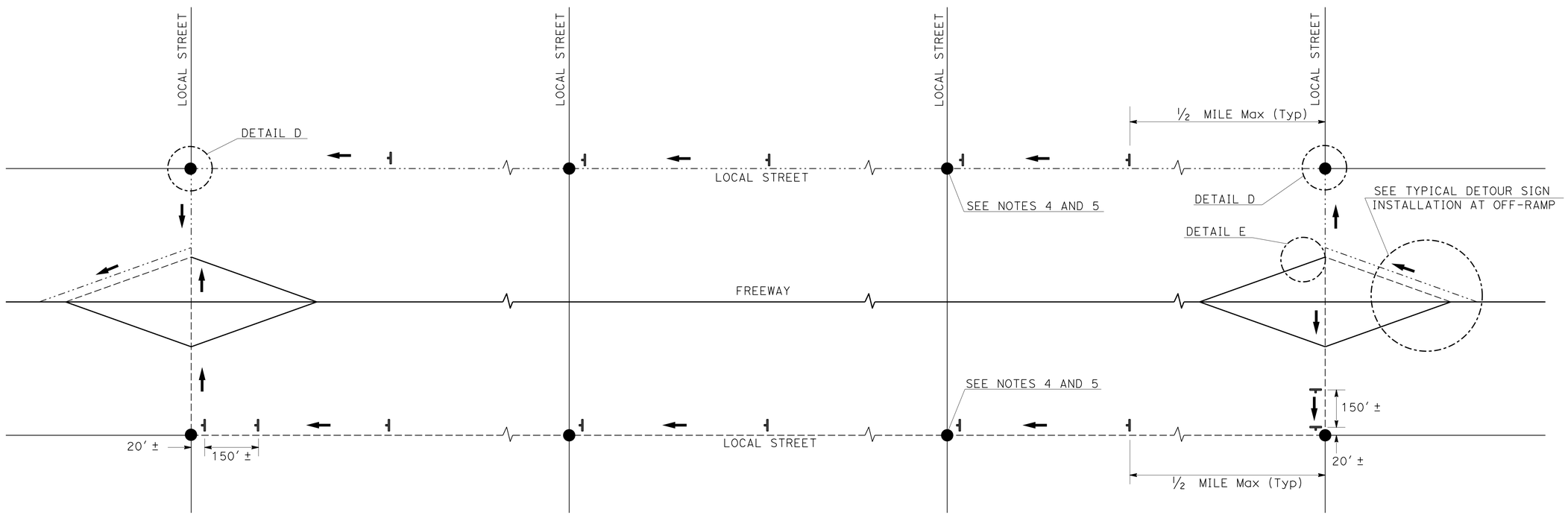

TYPICAL DETOUR SIGN INSTALLATION ALONG DESIGNATED DETOUR ROUTE

TRAFFIC HANDLING DETAILS

TRAFFIC CONTROL SYSTEM FOR DETOUR SIGN INSTALLATION ALONG DESIGNATED DETOUR ROUTE

SHEET 1 OF 2

NO SCALE

THD-3

STATE OF CALIFORNIA - DEPARTMENT OF TRANSPORTATION
Caltrans DTM

FUNCTIONAL SUPERVISOR: SAM ESQUENAZI
CALCULATED-DESIGNED BY: JAY NASSER
CHECKED BY: DYARI AHMED
REVISED BY: JC
DATE REVISED: 2/14

LAST REVISION 00-00-00
DATE PLOTTED => 30-AUG-2016
TIME PLOTTED => 12:23

Dist	COUNTY	ROUTE	POST MILES TOTAL PROJECT	SHEET No.	TOTAL SHEETS
07	LA	105,110	R6.6/R8.0 13.2/14.7	20	93

REGISTERED CIVIL ENGINEER 6-17-16 DATE

7-1-16
PLANS APPROVAL DATE

REGISTERED PROFESSIONAL ENGINEER
DYARI AHMED
No. 66868
Exp 9/30/16
CIVIL
STATE OF CALIFORNIA

THE STATE OF CALIFORNIA OR ITS OFFICERS OR AGENTS SHALL NOT BE RESPONSIBLE FOR THE ACCURACY OR COMPLETENESS OF SCANNED COPIES OF THIS PLAN SHEET.

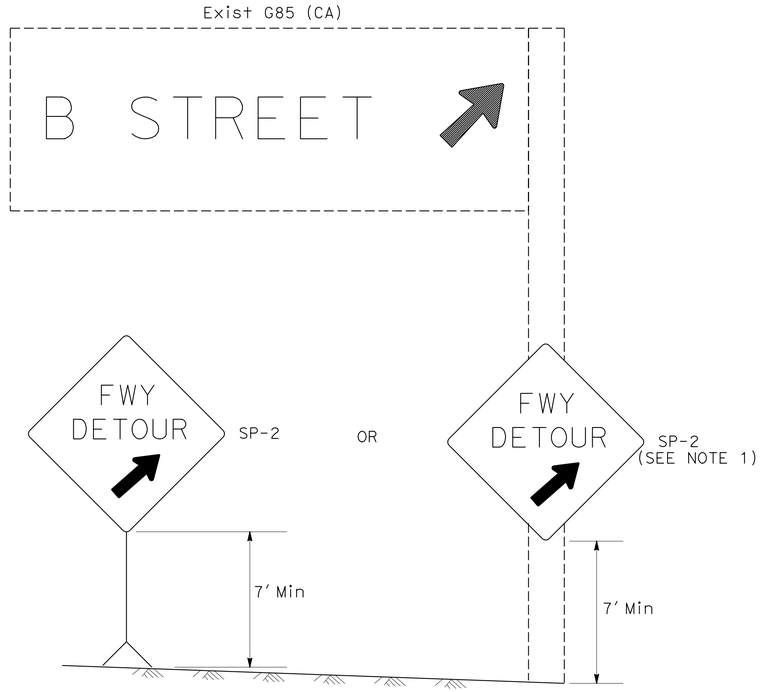

DETAIL A (SEE NOTE 3)

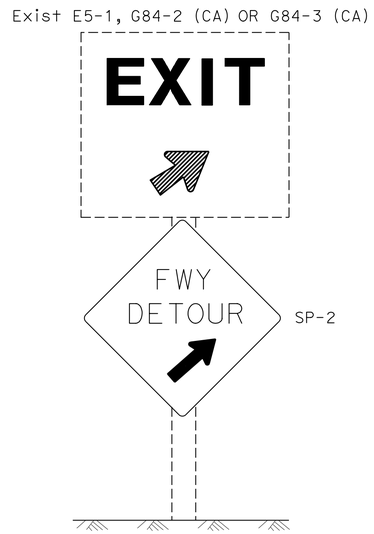

DETAIL B (SEE NOTE 3)

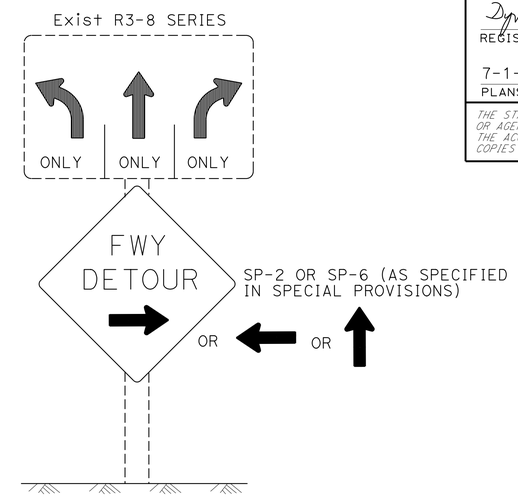

DETAIL C (SEE NOTES 4, 5, AND 6)

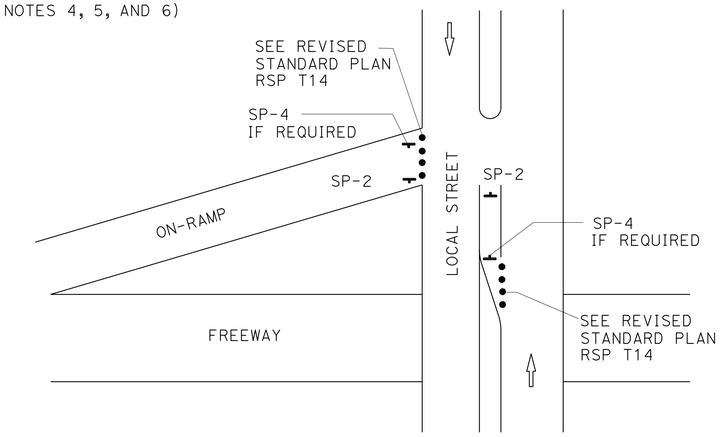

DETAIL E

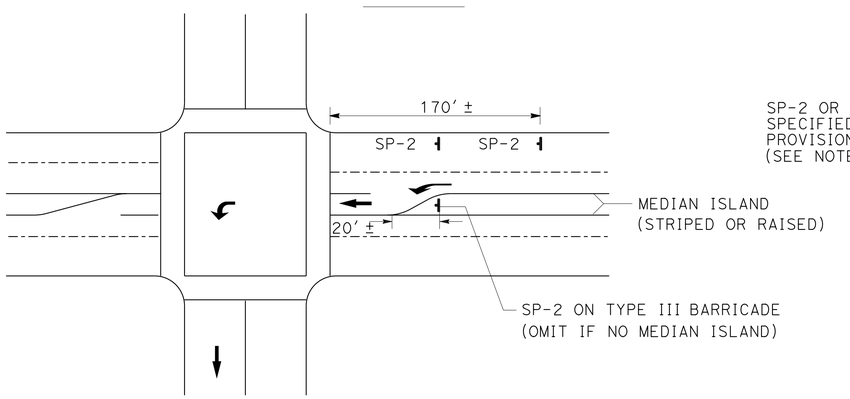

DETAIL D

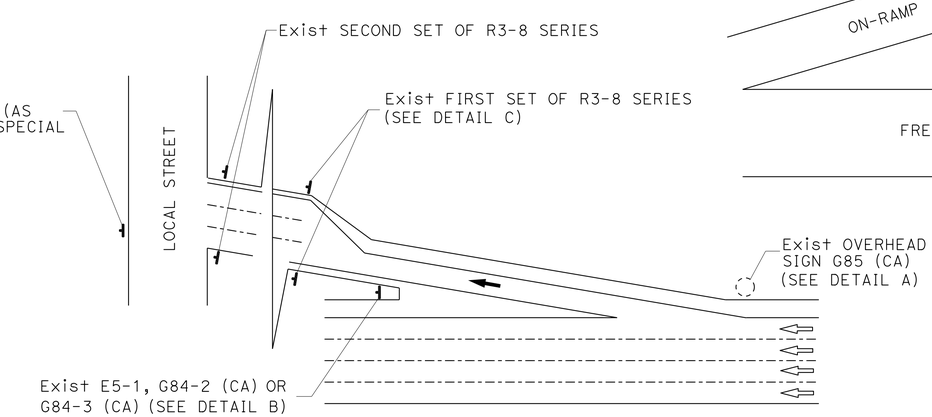

TYPICAL DETOUR SIGN INSTALLATION AT OFF-RAMP

LEGEND

- • TRAFFIC CONE
- TEMPORARY TRAFFIC CONTROL SIGN
- → DETOUR DIRECTION
- ◌ EXISTING OVERHEAD SIGN

NOTES: SIGN SP-2

1. SP-2 SIGNS MAY BE STRAPPED ON EXISTING ELECTROLIER, SIGNAL POST OR SIGN POST.
2. SP-2 SIGNS MUST NOT BE INSTALLED ON BARRICADES EXCEPT AS OTHERWISE SHOWN.
3. OMIT DETAILS A AND B FOR FULL FREEWAY CLOSURES.
4. SEE TRAFFIC HANDLING DETAILS-TRAFFIC CONTROL SYSTEM FOR RAMP CLOSURES, DETOUR SIGNS, AND MISCELLANEOUS DETAILS PLAN SHEET 2 OF 2 FOR SP-6 SIGN DETAILS.
5. IF R3-8 SERIES SIGNS ARE NOT PRESENT AT THE OFF-RAMP, SP-2 OR SP-6 SIGNS MUST BE FASTENED ONTO EXISTING ELECTROLIER, SIGNAL POST OR SIGN POST.
6. EXCEPT FOR DETAILS A & B, OMIT SP-2 SIGNS IF RAMP HAS MANDATORY SINGLE MOVE.

SIGN CODE LEGEND

XXYY-Y: FEDERAL SIGN CODE PER MANUAL ON UNIFORM TRAFFIC CONTROL DEVICES (MUTCD)

XXYY-Y (CA): CALIFORNIA SIGN CODE PER CALIFORNIA MUTCD

TRAFFIC HANDLING DETAILS
TRAFFIC CONTROL SYSTEM FOR DETOUR SIGN INSTALLATION ALONG DESIGNATED DETOUR ROUTE SHEET 2 OF 2

NO SCALE

THD-4

STATE OF CALIFORNIA - DEPARTMENT OF TRANSPORTATION
Caltrans DTM

FUNCTIONAL SUPERVISOR: SAM ESQUENAZI
CALCULATED-DESIGNED BY: JAY NASSER
CHECKED BY: DYARI AHMED
REVISED BY: JC
DATE REVISED: 2/14

LAST REVISION: DATE PLOTTED => 30-AUG-2016
00-00-00 TIME PLOTTED => 12:23

Dist	COUNTY	ROUTE	POST MILES TOTAL PROJECT	SHEET No.	TOTAL SHEETS
07	LA	105,110	R6.6/R8.0 13.2/14.7	21	93

REGISTERED CIVIL ENGINEER 6-17-16 DATE

7-1-16
PLANS APPROVAL DATE

REGISTERED PROFESSIONAL ENGINEER DYARI AHMED No. 66868 Exp 9/30/16 CIVIL STATE OF CALIFORNIA

THE STATE OF CALIFORNIA OR ITS OFFICERS OR AGENTS SHALL NOT BE RESPONSIBLE FOR THE ACCURACY OR COMPLETENESS OF SCANNED COPIES OF THIS PLAN SHEET.

LEGEND

- TRAFFIC CONE
- TRAFFIC PLASTIC DRUM
- TEMPORARY TRAFFIC CONTROL SIGN
- BARRICADES
- PCMS
- FLASHING ARROW SIGN (FAS)
- FAS SUPPORT OR TRAILER

ABBREVIATIONS

(CA) CALIFORNIA CODE

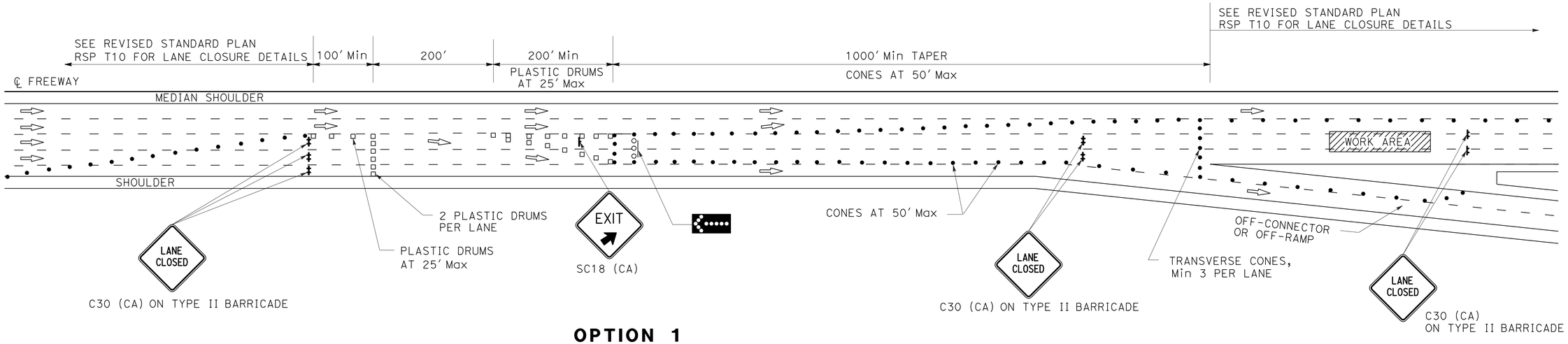

OPTION 1

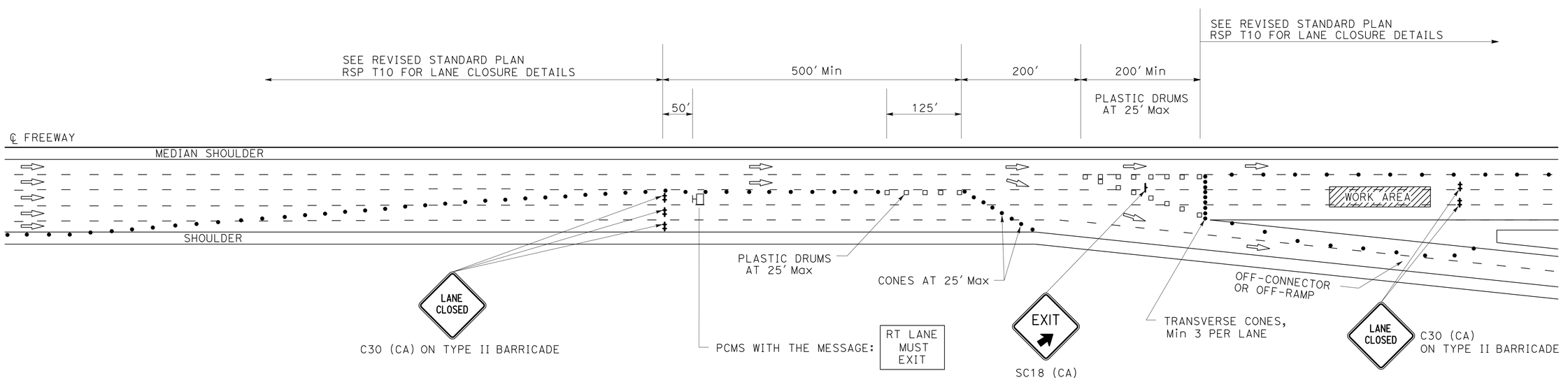

OPTION 2

TRAFFIC HANDLING DETAILS

TRAFFIC CONTROL SYSTEM FOR SLIP-RAMP AT OFF-CONNECTOR OR OFF-RAMP

NO SCALE

THD-5

REVISED BY	DATE REVISED
JC	2/14

CALCULATED-DESIGNED BY	CHECKED BY
JAY NASSER	DYARI AHMED

FUNCTIONAL SUPERVISOR: SAM ESQUENAZI

STATE OF CALIFORNIA - DEPARTMENT OF TRANSPORTATION

Caltrans® DTM

LAST REVISION 00-00-00 | DATE PLOTTED => 30-AUG-2016 | TIME PLOTTED => 12:24

Dist	COUNTY	ROUTE	POST MILES TOTAL PROJECT	SHEET No.	TOTAL SHEETS
07	LA	105,110	R6.6/R8.0 13.2/14.7	22	93

REGISTERED CIVIL ENGINEER 6-17-16 DATE

7-1-16
PLANS APPROVAL DATE

REGISTERED PROFESSIONAL ENGINEER DYARI AHMED No. 66868 Exp 9/30/16 CIVIL STATE OF CALIFORNIA

THE STATE OF CALIFORNIA OR ITS OFFICERS OR AGENTS SHALL NOT BE RESPONSIBLE FOR THE ACCURACY OR COMPLETENESS OF SCANNED COPIES OF THIS PLAN SHEET.

NOTES:

1. LANE CLOSURES MUST NOT BE PLACED ON CREST VERTICAL CURVES OR ON HORIZONTAL CURVES.
2. PCMS MUST BE ACTIVATED PRIOR TO TRAFFIC CONTROL ACTIVITIES ON THE HOV LANE.
3. A MINIMUM SIGHT DISTANCE OF 1500′ MUST BE PROVIDED IN ADVANCE OF PCMS.
4. VEHICLE-MOUNTED SIGN PANELS MUST BE TYPE III OR IV RETROREFLECTORIZED SHEETING, BLACK ON WHITE OR BLACK ON ORANGE WITH 8" MINIMUM SERIES D LETTERS PER CALTRANS SIGN SPECIFICATIONS.
5. PLACE PCMS ON THE MEDIAN SHOULDER WHERE SUFFICIENT ROOM (SUCH AS CHP ENFORCEMENT AREAS) EXISTS.
6. ADVANCE WARNING SIGN INSTALLATIONS MUST BE EQUIPPED WITH FLAGS FOR DAYTIME CLOSURES. TYPE B HIGH INTENSITY FLASHING WARNING LIGHTS MUST BE USED ON SP-16 SIGN DURING NIGHT LANE CLOSURES. FLAGS AND WARNING LIGHTS MUST BE ATTACHED TO SIGNS AS APPROVED BY THE ENGINEER.

LEGEND

V1, V2	SHADOW VEHICLES
V3	WORK/APPLICATION VEHICLE
	PCMS
	PORTABLE FLASHING BEACON
	TEMPORARY TRAFFIC CONTROL SIGN
	FLASHING ARROW SIGN (FAS)

ABBREVIATIONS

IAV	IMPACT ATTENUATOR VEHICLE
(CA)	CALIFORNIA CODE
CHP	CALIFORNIA HIGHWAY PATROL

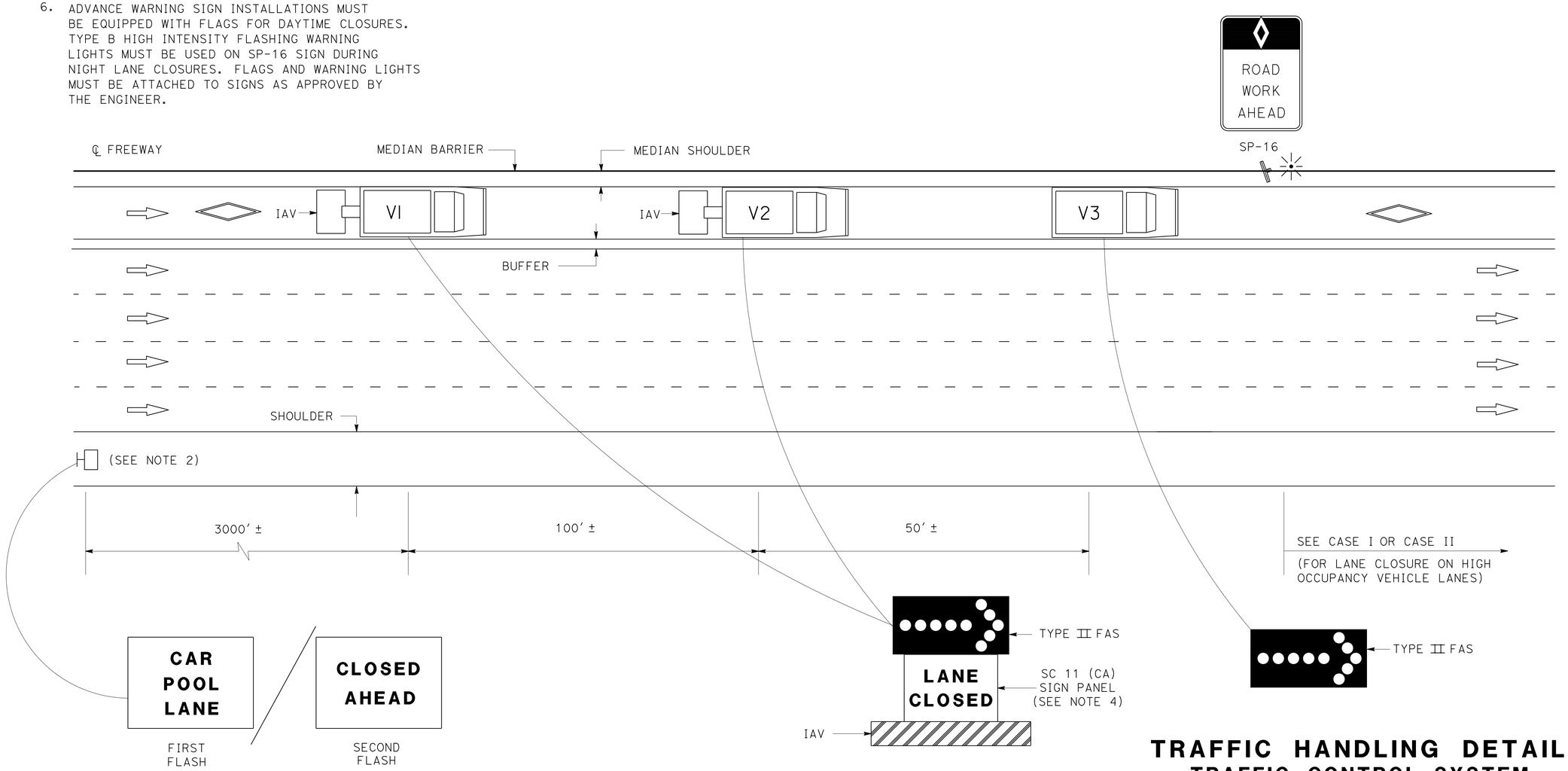

PCMS OR TRUCK MOUNTED CMS MESSAGE

(SEE NOTE 5)

TRAFFIC HANDLING DETAILS
TRAFFIC CONTROL SYSTEM FOR HIGH OCCUPANCY VEHICLE LANES WITH MEDIAN SHOULDERS LESS THAN 8 FEET

NO SCALE

THD-6

STATE OF CALIFORNIA - DEPARTMENT OF TRANSPORTATION
Caltrans® DTM

FUNCTIONAL SUPERVISOR: SAM ESQUENAZI
CALCULATED-DESIGNED BY: JAY NASSER
CHECKED BY: DYARI AHMED
REVISED BY: JC
DATE REVISED: 2/14

LAST REVISION 00-00-00 | DATE PLOTTED => 30-AUG-2016 | TIME PLOTTED => 12:24

Dist	COUNTY	ROUTE	POST MILES TOTAL PROJECT	SHEET No.	TOTAL SHEETS
07	LA	105,110	R6.6/R8.0 13.2/14.7	23	93

REGISTERED CIVIL ENGINEER 6-17-16 DATE

7-1-16
PLANS APPROVAL DATE

REGISTERED PROFESSIONAL ENGINEER DYARI AHMED No. 66868 Exp 9/30/16 CIVIL STATE OF CALIFORNIA

THE STATE OF CALIFORNIA OR ITS OFFICERS OR AGENTS SHALL NOT BE RESPONSIBLE FOR THE ACCURACY OR COMPLETENESS OF SCANNED COPIES OF THIS PLAN SHEET.

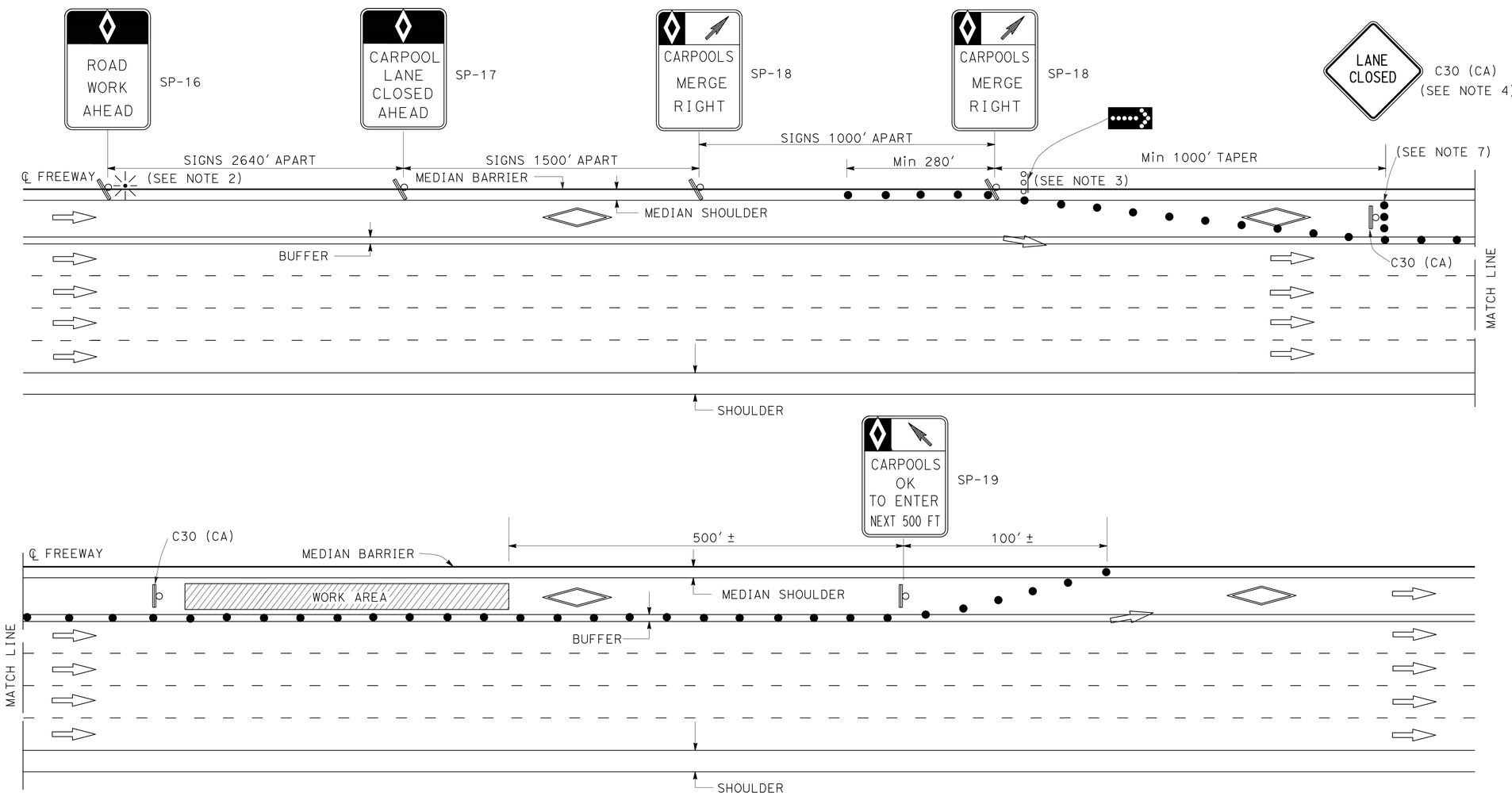

LEGEND

- ● TRAFFIC CONE
- PORTABLE FLASHING BEACON
- TEMPORARY TRAFFIC CONTROL SIGN
- FLASHING ARROW SIGN (FAS)
- FAS SUPPORT OR TRAILER

ABBREVIATIONS

(CA) CALIFORNIA CODE

SIGN PANEL

	SIZE (MIN)
SP-16	36" X 54"
SP-17	36" X 54"
SP-18	36" X 48"
SP-19	36" X 60"
C30 (CA)	30" X 30"
G20-2	48" X 24"

NOTES: FOR CASE I AND CASE II

1. AT LEAST ONE PERSON MUST BE ASSIGNED TO FULL TIME MAINTENANCE OF TRAFFIC CONTROL DEVICES ON NIGHT LANE CLOSURES OR DAY-TIME CLOSURES EXCEEDING 1 MILE LENGTH, INCLUDING TAPERS.
2. ADVANCE WARNING SIGN INSTALLATIONS MUST BE EQUIPPED WITH FLAGS FOR DAYTIME CLOSURES. TYPE B HIGH INTENSITY FLASHING WARNING LIGHTS MUST BE USED ON SP-16 SIGN DURING NIGHT LANE CLOSURES. FLAGS AND WARNING LIGHTS MUST BE ATTACHED TO SIGNS AS APPROVED BY THE ENGINEER.
3. THE FLASHING ARROW SIGN MUST BE TYPE I.
4. PLACE C30 (CA) SIGNS EVERY 2000' THROUGHOUT THE LENGTH OF LANE CLOSURE.
5. A MINIMUM 1500' OF SIGHT DISTANCE MUST BE PROVIDED WHERE POSSIBLE FOR VEHICLES APPROACHING THE FLASHING ARROW SIGN. LANE CLOSURES MUST NOT BE PLACED ON CREST VERTICAL CURVES OR ON HORIZONTAL CURVES.
6. PORTABLE DELINEATORS PLACED AT ONE-HALF THE SPACING INDICATED FOR TRAFFIC CONES MAY BE USED INSTEAD OF CONES FOR DAYTIME CLOSURES.
7. A MINIMUM OF 3 CONES MUST BE PLACED TRANSVERSELY ACROSS CLOSED LANES WHERE TAPERS END AND EVERY 2000'. TWO TYPE II BARRICADES MAY BE USED INSTEAD OF 3 CONES. THE ALIGNMENT OF CONES OR BARRICADES MAY BE SHIFTED FROM THE TRANSVERSE ALIGNMENT TO PROVIDE ACCESS TO WORK.
8. IF AN INGRESS/EGRESS AREA IS WITHIN 5250' UPSTREAM OR DOWNSTREAM OF THE WORK AREA, LANE CLOSURES MUST BE EXTENDED TO THAT AREA AS SHOWN IN CASE II.
9. SIGNS SP-16, 17, 18, AND 19 MAY BE OVERLAID ON EXISTING CARPOOL SIGNS IN MEDIANS AS APPROVED BY THE ENGINEER.
10. SIGNS SP-16, 17, 18, AND C30 (CA) MUST BE BLACK ON ORANGE BACKGROUND. SIGN SP-19 MUST BE BLACK ON WHITE BACKGROUND. DIAMONDS ON SIGNS MUST BE WHITE.
11. FOR CLOSURE OF LANE(S) ADJACENT TO HOV LANES, SEE CASE II.
12. THE MAXIMUM SPACING BETWEEN CONES MUST BE APPROXIMATELY 50' IN TAPERS AND 100' ON TANGENTS.

TRAFFIC HANDLING DETAILS
TRAFFIC CONTROL SYSTEM FOR HIGH OCCUPANCY VEHICLE LANES AT NON-INGRESS/EGRESS AREAS
CASE I

NO SCALE

THD-7

JC	2/14
REVISED BY	DATE REVISED
JAY NASSER	DYARI AHMED
CALCULATED-DESIGNED BY	CHECKED BY
FUNCTIONAL SUPERVISOR	SAM ESQUENAZI

STATE OF CALIFORNIA - DEPARTMENT OF TRANSPORTATION
Caltrans® DTM

LAST REVISION 00-00-00 | DATE PLOTTED => 30-AUG-2016 | TIME PLOTTED => 12:24

Dist	COUNTY	ROUTE	POST MILES TOTAL PROJECT	SHEET No.	TOTAL SHEETS
07	LA	105,110	R6.6/R8.0 13.2/14.7	24	93

REGISTERED CIVIL ENGINEER 6-17-16 DATE

7-1-16
PLANS APPROVAL DATE

REGISTERED PROFESSIONAL ENGINEER DYARI AHMED No. 66868 Exp 9/30/16 CIVIL STATE OF CALIFORNIA

THE STATE OF CALIFORNIA OR ITS OFFICERS OR AGENTS SHALL NOT BE RESPONSIBLE FOR THE ACCURACY OR COMPLETENESS OF SCANNED COPIES OF THIS PLAN SHEET.

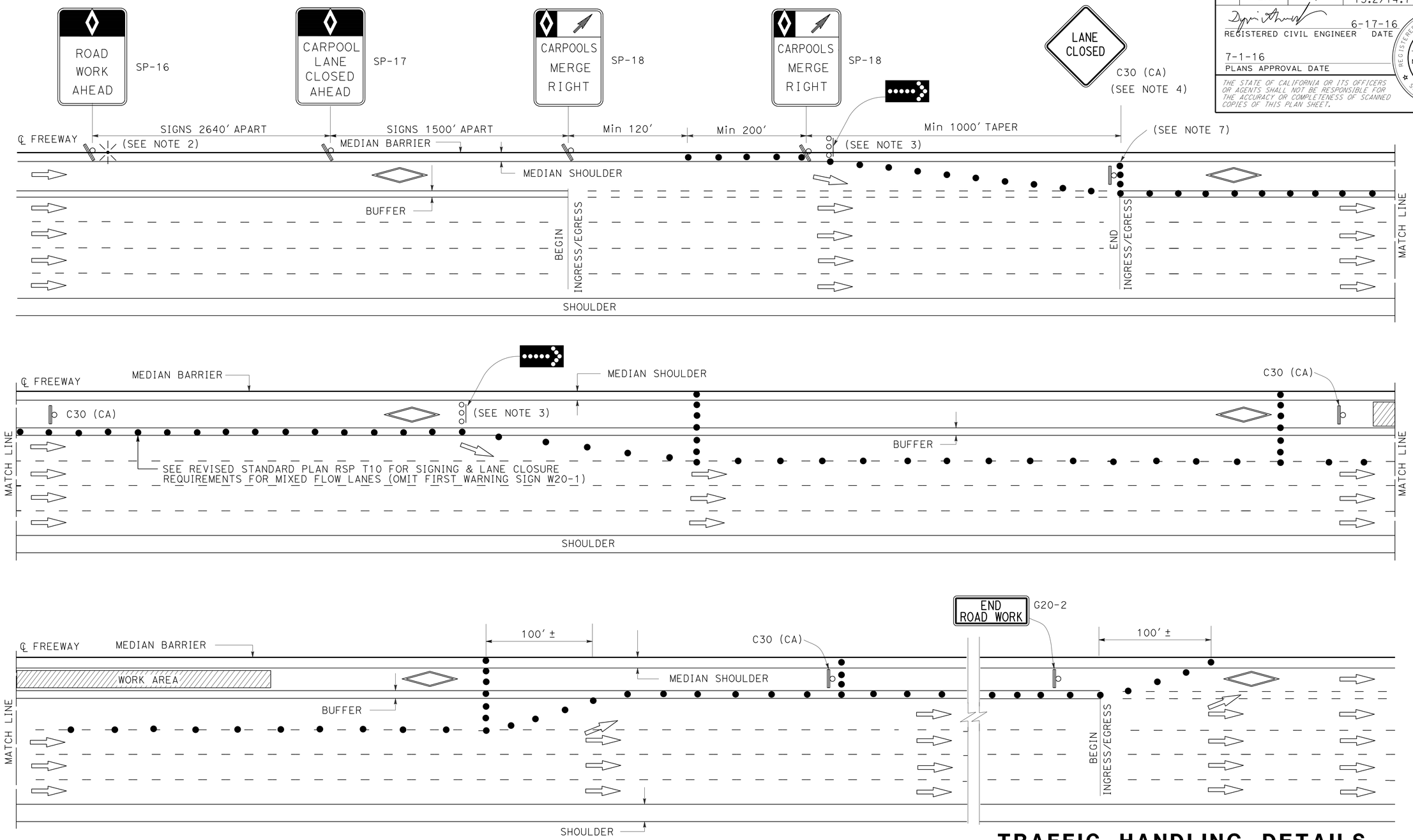

NOTES:

1. SEE CASE I FOR NOTES, LEGEND, SIGN PANEL, AND ABBREVIATIONS FOR THIS SHEET.
2. CLOSURES OF ONE MIXED FLOW TRAFFIC LANE ADJACENT TO HOV LANE SHOWN ON THIS SHEET. MULTIPLE MIXED FLOW LANE CLOSURES ARE SIMILAR.

TRAFFIC HANDLING DETAILS
TRAFFIC CONTROL SYSTEM FOR HIGH OCCUPANCY VEHICLE LANES AND ADJACENT FREEWAY LANES BETWEEN INGRESS/EGRESS AREAS
CASE II

NO SCALE

THD-8

CALCULATED-DESIGNED BY	CHECKED BY	FUNCTIONAL SUPERVISOR	REVISED BY	DATE REVISED
JAY NASSER	DYARI AHMED	SAM ESQUENAZI	JC	2/14

STATE OF CALIFORNIA - DEPARTMENT OF TRANSPORTATION
Caltrans
DTM

LAST REVISION 00-00-00 | DATE PLOTTED => 30-AUG-2016 | TIME PLOTTED => 12:24

Dist	COUNTY	ROUTE	POST MILES TOTAL PROJECT	SHEET No.	TOTAL SHEETS
07	LA	105 110	R6.61/R8.08 13.20/14.71	25	93

REGISTERED CIVIL ENGINEER 6/21/16 DATE

7-1-16
PLANS APPROVAL DATE

REGISTERED PROFESSIONAL ENGINEER ANH D. NGUYEN No. 62370 Exp. 9/30/17 CIVIL STATE OF CALIFORNIA

THE STATE OF CALIFORNIA OR ITS OFFICERS OR AGENTS SHALL NOT BE RESPONSIBLE FOR THE ACCURACY OR COMPLETENESS OF SCANNED COPIES OF THIS PLAN SHEET.

LEGEND:

- ● CHANNELIZER (SURFACE MOUNTED)
- TEMPORARY CRASH CUSHION ARRAY
- WORK AREA

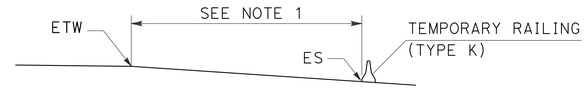

SECTION J-J

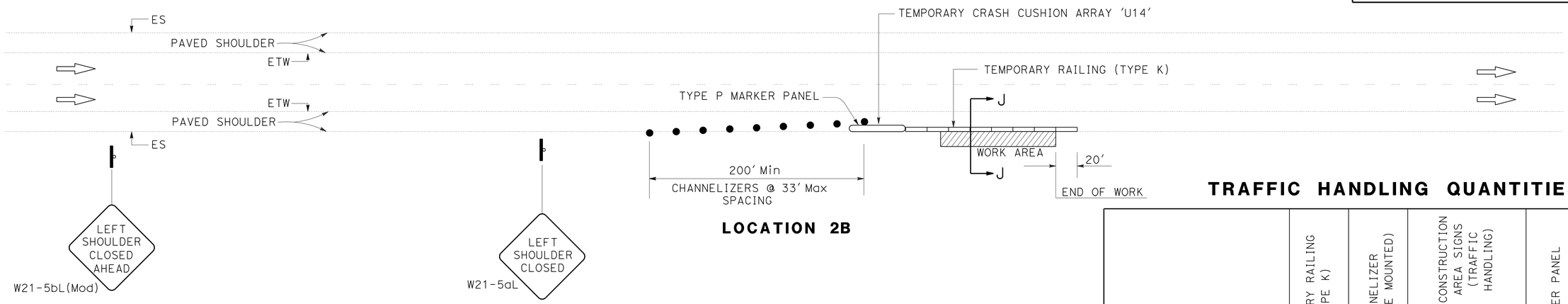

LOCATION 2B

TRAFFIC HANDLING QUANTITIES

No.	DIRECTION/ ROUTE	STATION	TEMPORARY RAILING (TYPE K)	CHANNELIZER (SURFACE MOUNTED)	CONSTRUCTION AREA SIGNS (TRAFFIC HANDLING) W21-5aL (N)	W21-5bL(Mod) (N)	W21-5aR (N)	W21-5bR(Mod) (N)	TYPE P MARKER PANEL (N)	TEMPORARY CRASH CUSHION MODULE
			LF	EA	EA	EA	EA	EA	EA	EA
2A	SB Rte 110	249+20.00	160	9			1	1	1	14
2B	SB Rte 110	249+40.00	160	9	1	1			1	14
TOTAL			320	18	1	1	1	1	2	28

(N) NOT A SEPARATE PAY ITEM, FOR INFORMATION ONLY.

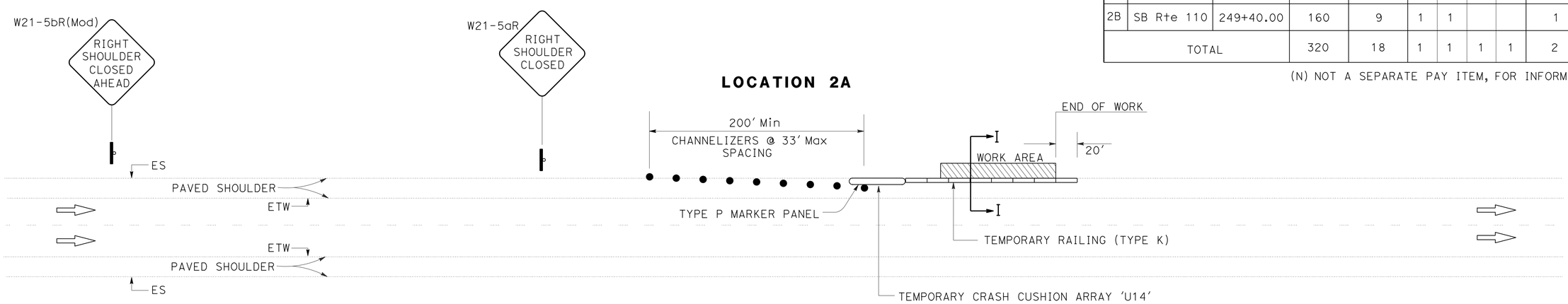

LOCATION 2A

NOTES:

1. TEMPORARY RAILINGS MUST NOT BE PLACED WHERE THE REMAINING USABLE SHOULDER WIDTH IS BETWEEN 4' TO 8'.
2. SIGN PANELS MUST BE AS FOLLOWS:

LOCATION	PANEL SIZE	MOUNTING METHOD
RIGHT OR LEFT SHOULDER WITH SIDE SLOPE	48"x 48"	STATIONARY
RIGHT OR LEFT SHOULDER WITH WALL RESTRICTION	48" x 48"	MOUNTED ON TYPE III BARRICADE

3. SEE SUMMARY OF QUANTITIES SHEET Q-1 FOR TRAFFIC HANDLING QUANTITIES.

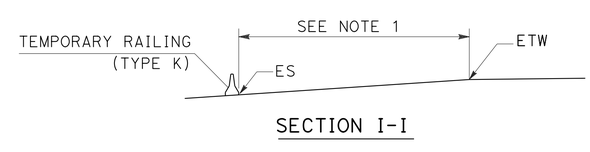

SECTION I-I

TRAFFIC HANDLING DETAILS
TYPICAL SHOULDER CLOSURES WITH TEMPORARY RAILING (TYPE K)

NO SCALE

THD-9

REVISED BY | DATE REVISED
JAMES M. CANALITA | ANH D. NGUYEN
CALCULATED-DESIGNED BY | CHECKED BY
FUNCTIONAL SUPERVISOR: MOHAMMED CHOWDHURY

STATE OF CALIFORNIA - DEPARTMENT OF TRANSPORTATION
Caltrans® TRAFFIC DESIGN

S:\projects\297401\District7_Roadway\729740me009.dgn

LAST REVISION 00-00-00 | DATE PLOTTED => 30-AUG-2016 | TIME PLOTTED => 12:24

Dist	COUNTY	ROUTE	POST MILES TOTAL PROJECT	SHEET No.	TOTAL SHEETS
07	LA	105,110	R6.6/R8.0 13.2/14.7	26	93

REGISTERED CIVIL ENGINEER 6/21/16 DATE

7-1-16
PLANS APPROVAL DATE

REGISTERED PROFESSIONAL ENGINEER
ANH D. NGUYEN
No. 62370
Exp. 9/30/17
CIVIL
STATE OF CALIFORNIA

THE STATE OF CALIFORNIA OR ITS OFFICERS OR AGENTS SHALL NOT BE RESPONSIBLE FOR THE ACCURACY OR COMPLETENESS OF SCANNED COPIES OF THIS PLAN SHEET.

LEGEND:

- (1-16A) OVERHEAD SIGN IDENTIFICATION (WITH NUMBER & LETTER)
- (1-21A) ROADSIDE SIGN IDENTIFICATION (WITH NUMBER & LETTER)
- (1) ROADSIDE SIGN - ONE POST
- (2) ROADSIDE SIGN - TWO POST
- (R) REMOVE ROADSIDE SIGN (WOOD POST)

SIGN CODE LEGEND:

XXYY-Y: FEDERAL SIGN CODE PER MANUAL ON UNIFORM TRAFFIC CONTROL DEVICES (MUTCD)

XXYY-Y (CA): CALIFORNIA SIGN CODE PER CALIFORNIA MUTCD

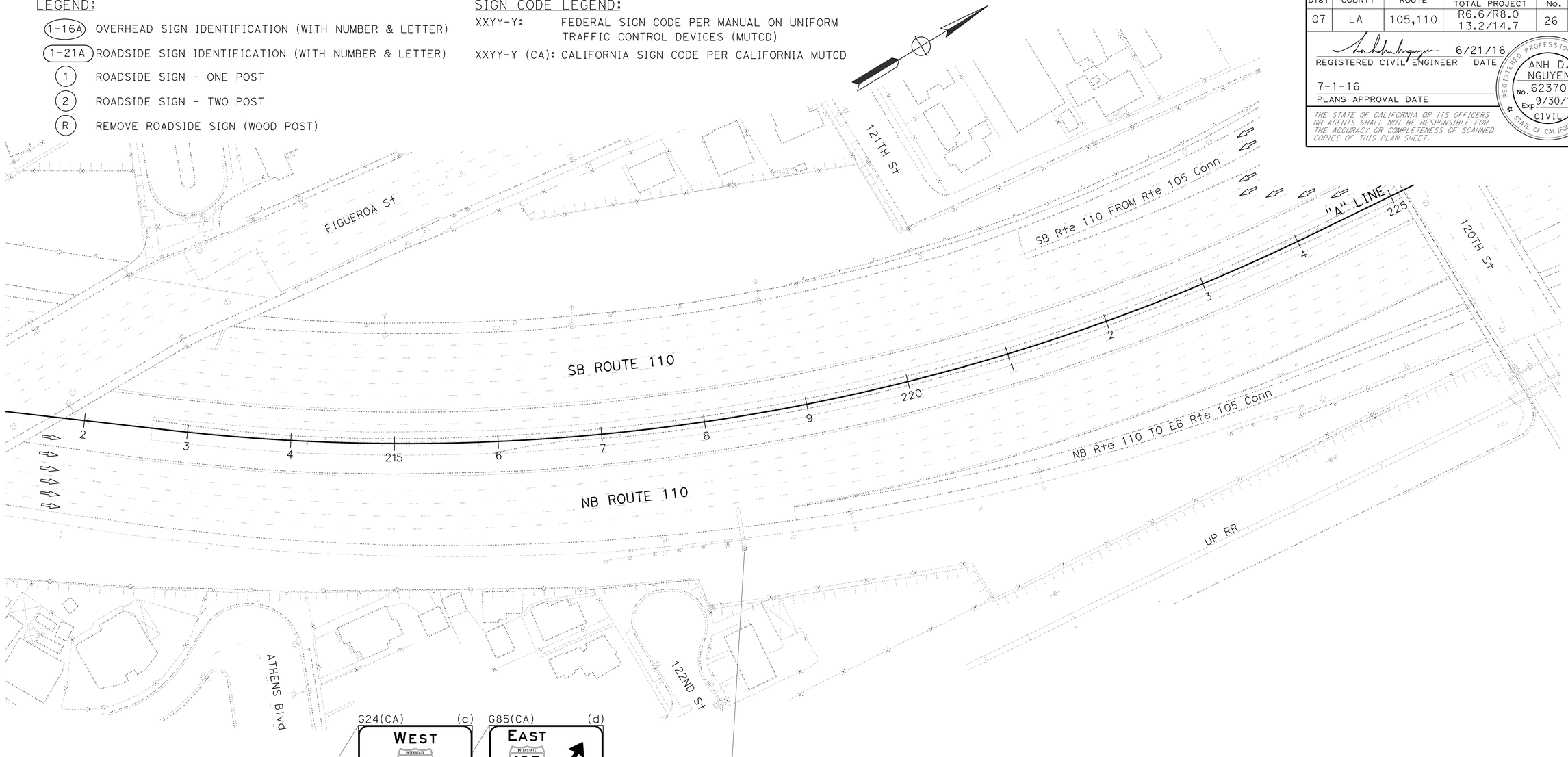

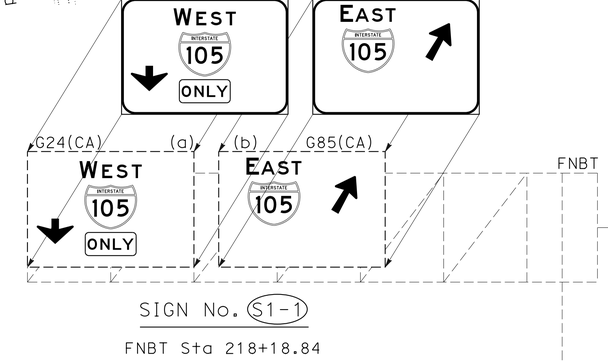

SIGN No. (S1-1)

FNBT Sta 218+18.84

1. REMOVE SIGN FROM SIGN FRAME (a) AND (b)
2. INSTALL SIGN PANEL ON Exist FRAME (c) AND (d)
3. SEE SHEET SD-2 FOR SIGN PANEL DETAILS

SIGN PLAN

SCALE : 1"=50'

S-1

APPROVED FOR SIGN WORK ONLY

REVISED BY | DATE REVISED

JAMES M. CANALITA | ANH D. NGUYEN

CALCULATED-DESIGNED BY | CHECKED BY

FUNCTIONAL SUPERVISOR

MOHAMMED CHOWDHURY

STATE OF CALIFORNIA - DEPARTMENT OF TRANSPORTATION

Caltrans® TRAFFIC DESIGN

S:\design\297401\traffic\FINAL PLANS 4_1_16\729740aa001.dgn

LAST REVISION 00-00-00 | DATE PLOTTED => 30-AUG-2016 | TIME PLOTTED => 12:24

Dist	COUNTY	ROUTE	POST MILES TOTAL PROJECT	SHEET No.	TOTAL SHEETS
07	LA	105,110	R6.6/R8.0 13.2/14.7	27	93

REGISTERED CIVIL ENGINEER 6/21/16 DATE

7-1-16
PLANS APPROVAL DATE

REGISTERED PROFESSIONAL ENGINEER
ANH D. NGUYEN
No. 62370
Exp. 9/30/17
CIVIL
STATE OF CALIFORNIA

THE STATE OF CALIFORNIA OR ITS OFFICERS OR AGENTS SHALL NOT BE RESPONSIBLE FOR THE ACCURACY OR COMPLETENESS OF SCANNED COPIES OF THIS PLAN SHEET.

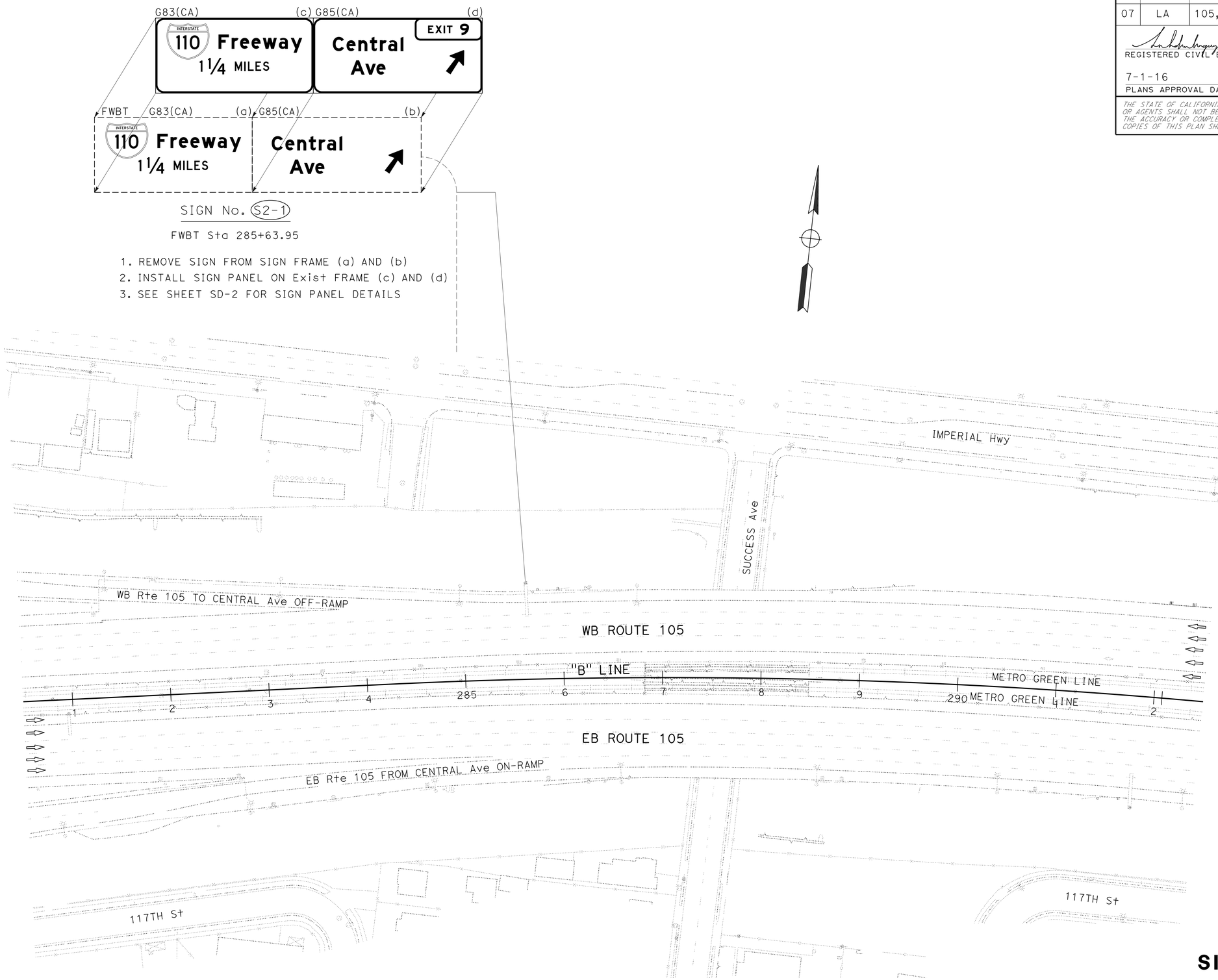

SIGN No. S2-1

FWBT Sta 285+63.95

1. REMOVE SIGN FROM SIGN FRAME (a) AND (b)
2. INSTALL SIGN PANEL ON Exist FRAME (c) AND (d)
3. SEE SHEET SD-2 FOR SIGN PANEL DETAILS

SIGN PLAN

SCALE: 1"=50'

S-2

APPROVED FOR SIGN WORK ONLY

REVISED BY | DATE REVISED

JAMES M. CANALITA | ANH D. NGUYEN

CALCULATED-DESIGNED BY | CHECKED BY

FUNCTIONAL SUPERVISOR

MOHAMMED CHOWDHURY

STATE OF CALIFORNIA - DEPARTMENT OF TRANSPORTATION

Caltrans® TRAFFIC DESIGN

S:\desig\297401\traffic\FINAL PLANS 4_1_16\729740aa002.dgn

LAST REVISION 00-00-00 | DATE PLOTTED => 30-AUG-2016 | TIME PLOTTED => 12:24

Dist	COUNTY	ROUTE	POST MILES TOTAL PROJECT	SHEET No.	TOTAL SHEETS
07	LA	105,110	R6.6/R8.0 13.2/14.7	28	93

REGISTERED CIVIL ENGINEER 6/21/16 DATE

7-1-16
PLANS APPROVAL DATE

REGISTERED PROFESSIONAL ENGINEER
ANH D. NGUYEN
No. 62370
Exp. 9/30/17
CIVIL
STATE OF CALIFORNIA

THE STATE OF CALIFORNIA OR ITS OFFICERS OR AGENTS SHALL NOT BE RESPONSIBLE FOR THE ACCURACY OR COMPLETENESS OF SCANNED COPIES OF THIS PLAN SHEET.

NOTE:
FOR ACCURATE RIGHT OF WAY DATA, CONTACT
RIGHT OF WAY ENGINEERING AT THE DISTRICT OFFICE.

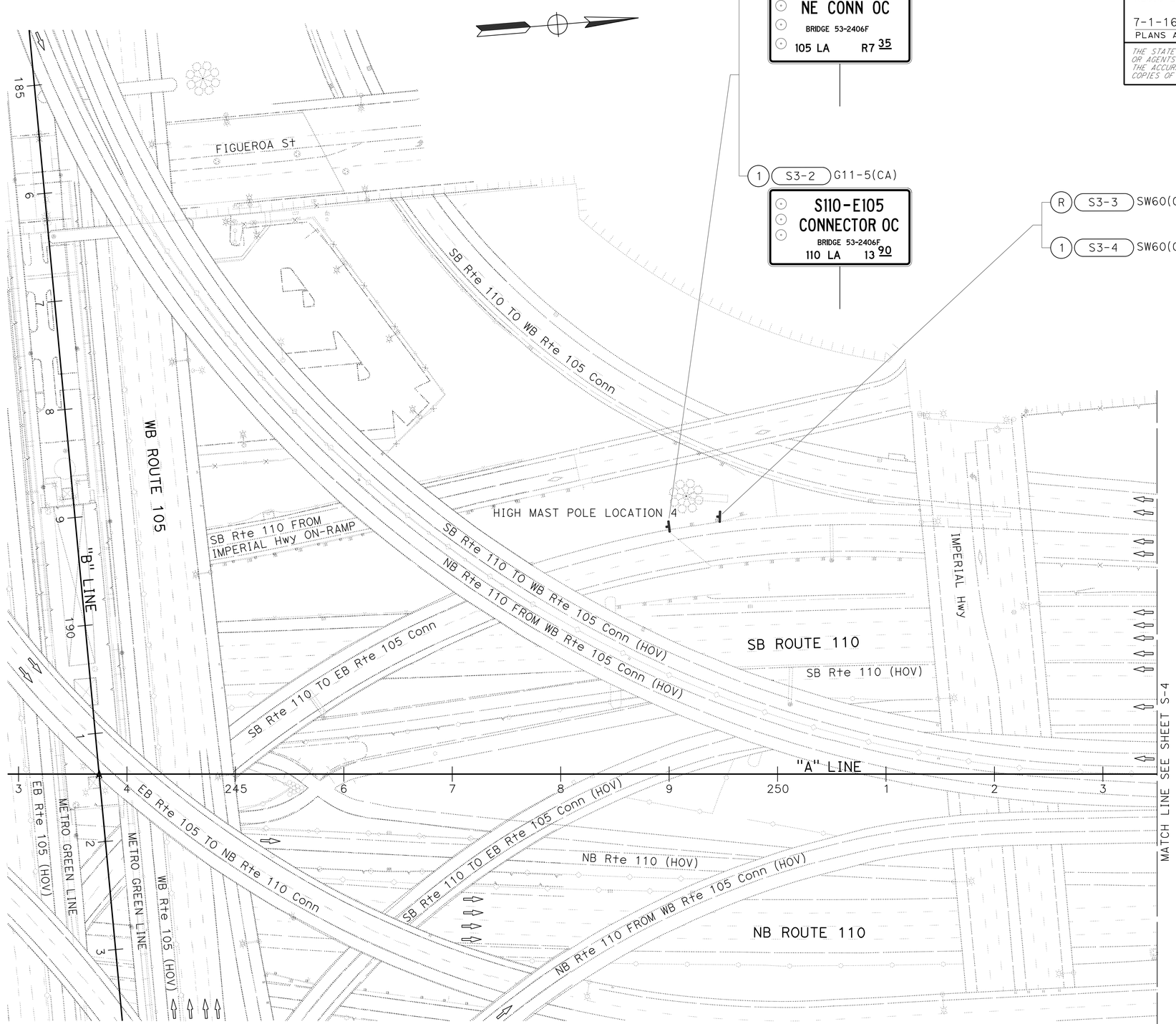

SIGN PLAN

SCALE 1"= 50'

S-3

STATE OF CALIFORNIA - DEPARTMENT OF TRANSPORTATION
Caltrans® **TRAFFIC DESIGN**

FUNCTIONAL SUPERVISOR: MOHAMMED CHOWDHURY
CALCULATED-DESIGNED BY: JAMES M. CANALITA
CHECKED BY: ANH D. NGUYEN
REVISED BY
DATE REVISED

LAST REVISION 00-00-00 | DATE PLOTTED => 30-AUG-2016 | TIME PLOTTED => 12:24

BORDER LAST REVISED 7/2/2010 | USERNAME => s116095 | DGN FILE => 729740oa003.dgn | RELATIVE BORDER SCALE IS IN INCHES 0 1 2 3 | UNIT 2124 | PROJECT NUMBER & PHASE 07130001491

Dist	COUNTY	ROUTE	POST MILES TOTAL PROJECT	SHEET No.	TOTAL SHEETS
07	LA	105,110	R6.6/R8.0 13.2/14.7	29	93

REGISTERED CIVIL ENGINEER 6/21/16 DATE

7-1-16
PLANS APPROVAL DATE

REGISTERED PROFESSIONAL ENGINEER
ANH D. NGUYEN
No. 62370
Exp. 9/30/17
CIVIL
STATE OF CALIFORNIA

THE STATE OF CALIFORNIA OR ITS OFFICERS OR AGENTS SHALL NOT BE RESPONSIBLE FOR THE ACCURACY OR COMPLETENESS OF SCANNED COPIES OF THIS PLAN SHEET.

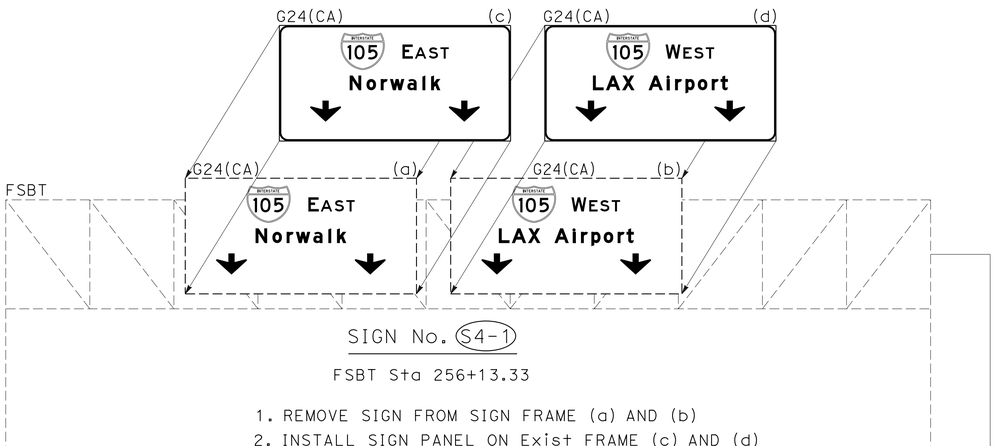

SIGN No. S4-1

FSBT Sta 256+13.33

1. REMOVE SIGN FROM SIGN FRAME (a) AND (b)
2. INSTALL SIGN PANEL ON Exist FRAME (c) AND (d)
3. SEE SHEET SD-3 FOR SIGN PANEL DETAILS

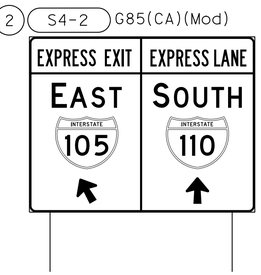

FSBT Sta 263+65.00

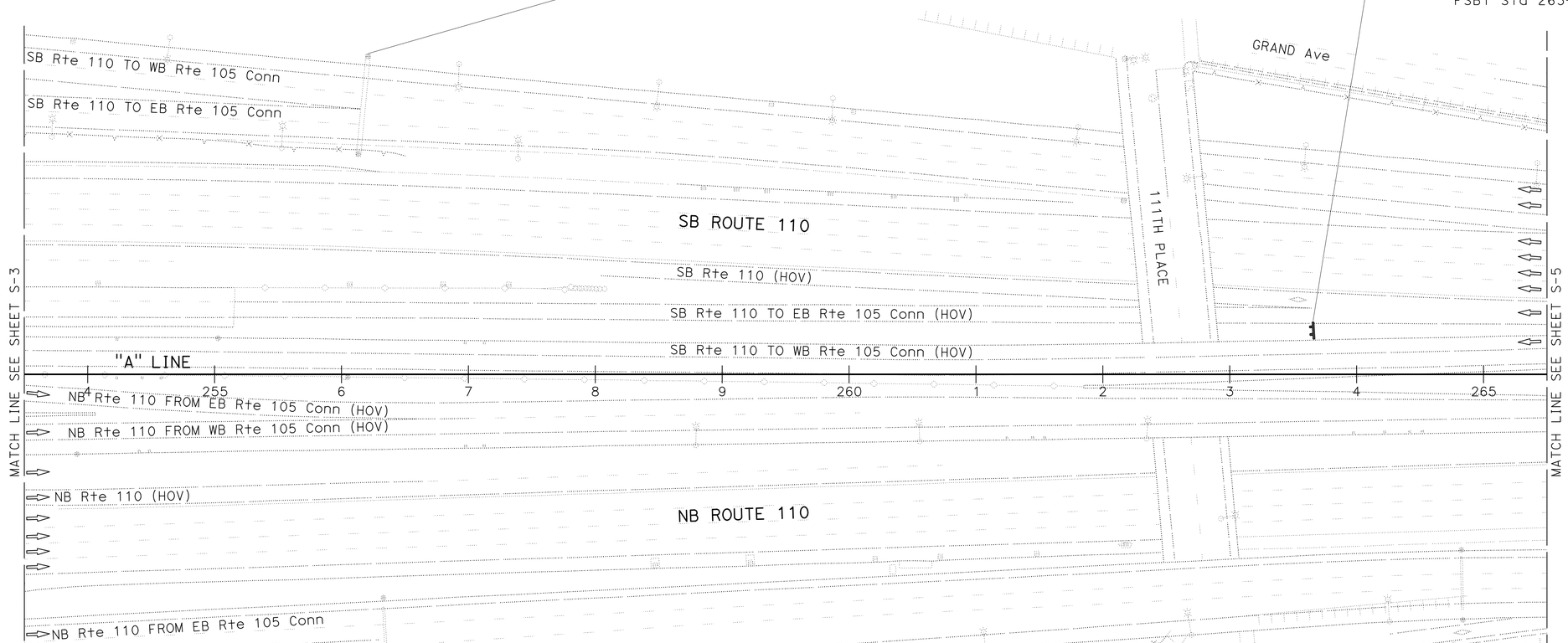

SIGN PLAN

SCALE 1"= 50"

S-4

APPROVED FOR SIGN WORK ONLY

REVISED BY	DATE REVISED
JAMES M. CANALITA	ANH D. NGUYEN

CALCULATED-DESIGNED BY	CHECKED BY

FUNCTIONAL SUPERVISOR: MOHAMMED CHOWDHURY

STATE OF CALIFORNIA - DEPARTMENT OF TRANSPORTATION
Caltrans® TRAFFIC DESIGN

S:\design\297401\traffic\FINAL PLANS 4_1_16\729740oa004.dgn

LAST REVISION 00-00-00 | DATE PLOTTED => 30-AUG-2016 | TIME PLOTTED => 12:24

Dist	COUNTY	ROUTE	POST MILES TOTAL PROJECT	SHEET No.	TOTAL SHEETS
07	LA	105,110	R6.6/R8.0 13.2/14.7	30	93

REGISTERED CIVIL ENGINEER 6/21/16 DATE

7-1-16
PLANS APPROVAL DATE

REGISTERED PROFESSIONAL ENGINEER
ANH D. NGUYEN
No. 62370
Exp. 9/30/17
CIVIL
STATE OF CALIFORNIA

THE STATE OF CALIFORNIA OR ITS OFFICERS OR AGENTS SHALL NOT BE RESPONSIBLE FOR THE ACCURACY OR COMPLETENESS OF SCANNED COPIES OF THIS PLAN SHEET.

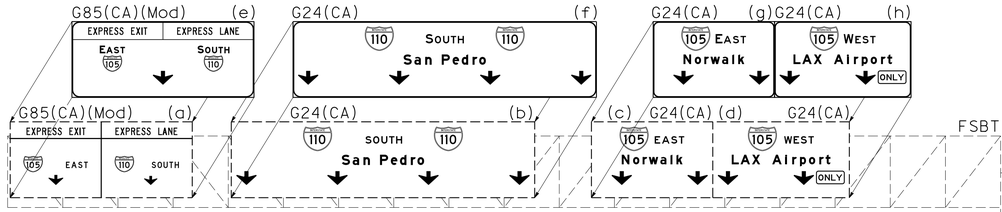

SIGN No. S5-1

FSBT Sta 266+09.48

1. REMOVE SIGN FROM SIGN FRAME (a), (b), (c) AND (d)
2. INSTALL SIGN PANEL ON Exist FRAME (e), (f), (g) AND (h)
3. SEE SHEETS SD-3 AND SD-4 FOR SIGN PANEL DETAILS

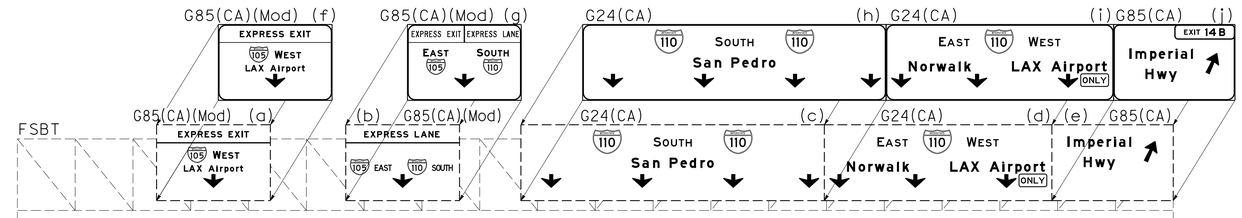

SIGN No. S5-2

FSBT Sta 275+16.96

1. REMOVE SIGN FROM SIGN FRAME (a), (b), (c), (d) AND (e)
2. INSTALL SIGN PANEL ON Exist FRAME (f), (g), (h), (i) AND (j)
3. SEE SHEETS SD-5 AND SD-6 FOR SIGN PANEL DETAILS

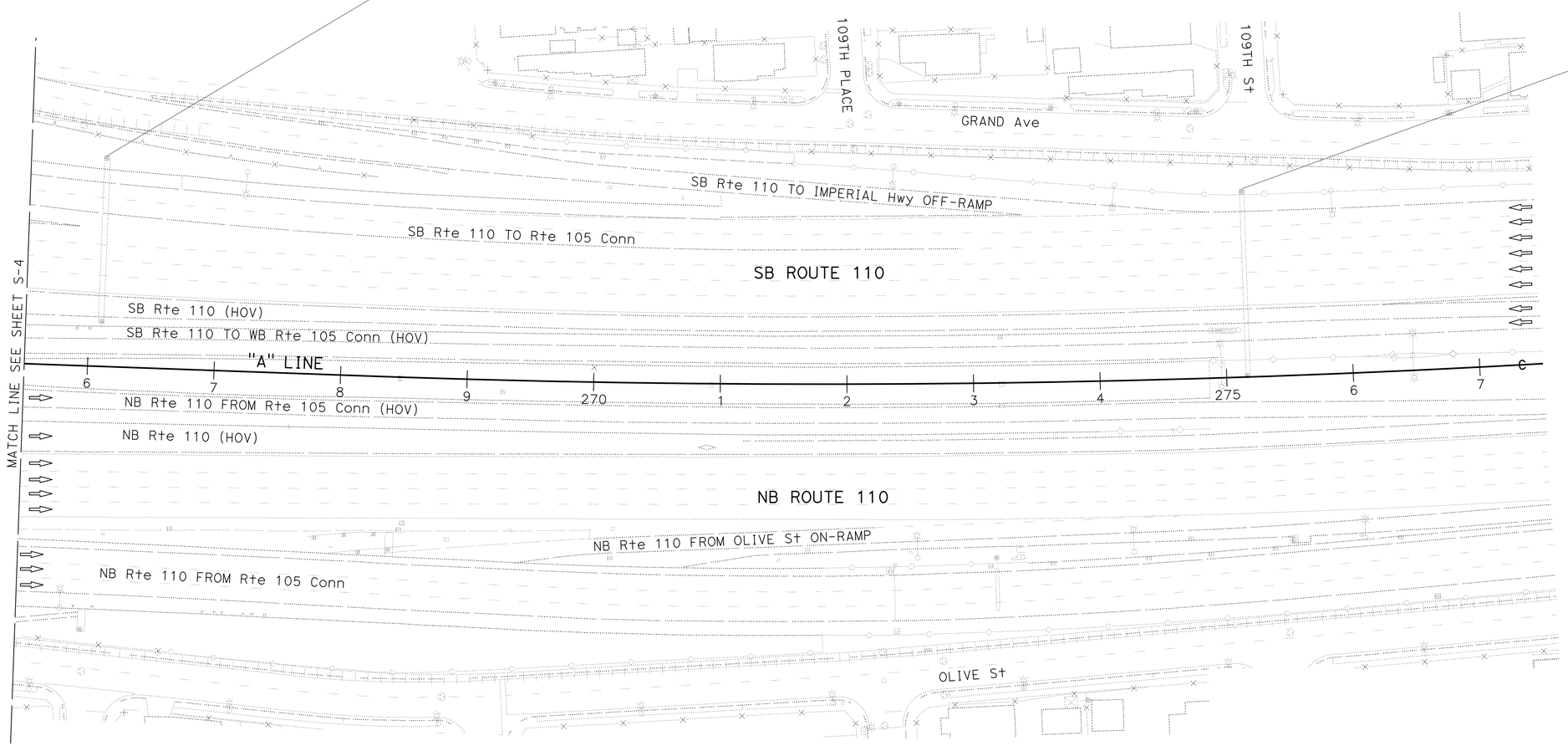

SIGN PLAN

SCALE 1" = 50'

S-5

APPROVED FOR SIGN WORK ONLY

REVISED BY	DATE REVISED
JAMES M. CANALITA	ANH D. NGUYEN
CALCULATED-DESIGNED BY	CHECKED BY
FUNCTIONAL SUPERVISOR	MOHAMMED CHOWDHURY

STATE OF CALIFORNIA - DEPARTMENT OF TRANSPORTATION
Caltrans® TRAFFIC DESIGN

S:\desig\297401\traffic\FINAL PLANS 4_1_16\729740aa005.dgn

LAST REVISION 00-00-00
DATE PLOTTED => 30-AUG-2016
TIME PLOTTED => 12:24

Dist	COUNTY	ROUTE	POST MILES TOTAL PROJECT	SHEET No.	TOTAL SHEETS
07	LA	105,110	R6.6/R8.0 13.2/14.7	31	93

REGISTERED CIVIL ENGINEER 6/21/16 DATE

7-1-16
PLANS APPROVAL DATE

REGISTERED PROFESSIONAL ENGINEER ANH D. NGUYEN No. 62370 Exp. 9/30/17 CIVIL STATE OF CALIFORNIA

THE STATE OF CALIFORNIA OR ITS OFFICERS OR AGENTS SHALL NOT BE RESPONSIBLE FOR THE ACCURACY OR COMPLETENESS OF SCANNED COPIES OF THIS PLAN SHEET.

G24(CA)

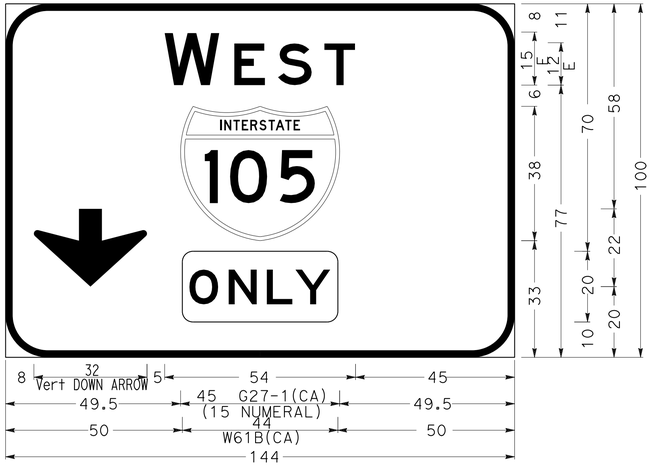

S1-1c

2.0 BORDER; 12.0 RADIUS
DIMENSION IN INCHES
WHITE LEGEND, ARROW AND BORDER
GREEN BACKGROUND

G85(CA)

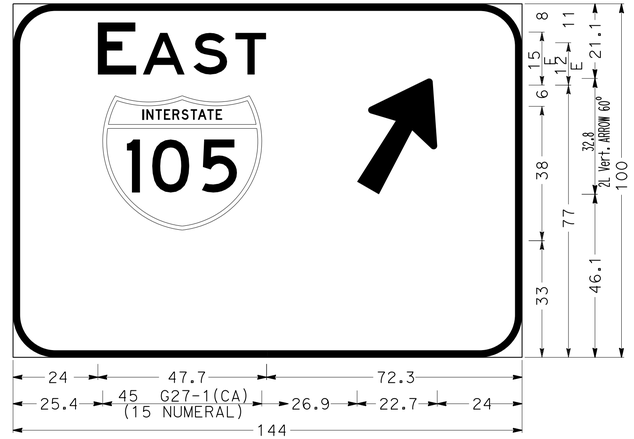

S1-1d

2.0 BORDER; 12.0 RADIUS
DIMENSION IN INCHES
WHITE LEGEND, ARROW AND BORDER
GREEN BACKGROUND

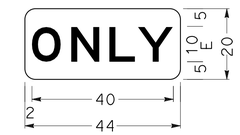

W61B(CA)

NO BORDER; 3.0 RADIUS
DIMENSION IN INCHES
BLACK LEGEND
FLOURESCENT YELLOW BACKGROUND

G83(CA)

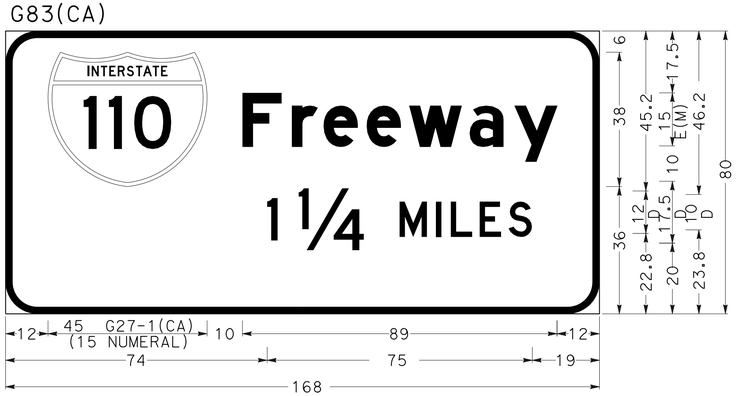

S2-1c

2.0 BORDER; 9.0 RADIUS
DIMENSION IN INCHES
WHITE LEGEND, ARROW AND BORDER
GREEN BACKGROUND

G85(CA)

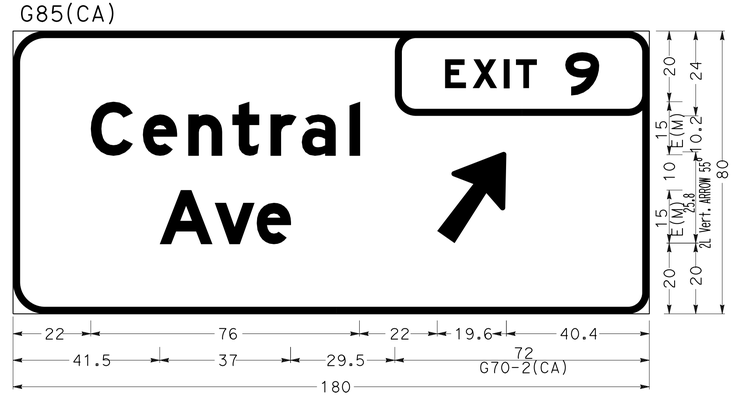

S2-1d

2.0 BORDER; 9.0 RADIUS
DIMENSION IN INCHES
WHITE LEGEND, ARROW AND BORDER
GREEN BACKGROUND

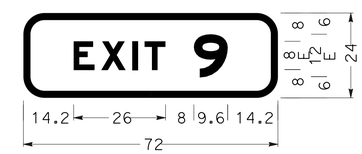

G70-2(CA)

2.0 BORDER; 6.0 RADIUS
DIMENSION IN INCHES
BORDER & LEGEND WHITE
BACKGROUND GREEN

SIGN DETAIL
NO SCALE

SD-1

APPROVED FOR SIGN WORK ONLY

REVISED BY | DATE REVISED
RICHARD B. KHAW | ANH D. NGUYEN
CALCULATED-DESIGNED BY | CHECKED BY
FUNCTIONAL SUPERVISOR
MOHAMMED CHOWDHURY

STATE OF CALIFORNIA - DEPARTMENT OF TRANSPORTATION
Caltrans® TRAFFIC DESIGN

S:\design\297401\traffic\FINAL PLANS 4_1_16\729740ob001.dgn

LAST REVISION 00-00-00 | DATE PLOTTED => 30-AUG-2016 | TIME PLOTTED => 12:24

Dist	COUNTY	ROUTE	POST MILES TOTAL PROJECT	SHEET No.	TOTAL SHEETS
07	LA	105,110	R6.6/R8.0 13.2/14.7	32	93

REGISTERED CIVIL ENGINEER 6/21/16 DATE

7-1-16
PLANS APPROVAL DATE

REGISTERED PROFESSIONAL ENGINEER
ANH D. NGUYEN
No. 62370
Exp. 9/30/17
CIVIL
STATE OF CALIFORNIA

THE STATE OF CALIFORNIA OR ITS OFFICERS OR AGENTS SHALL NOT BE RESPONSIBLE FOR THE ACCURACY OR COMPLETENESS OF SCANNED COPIES OF THIS PLAN SHEET.

G24(CA)

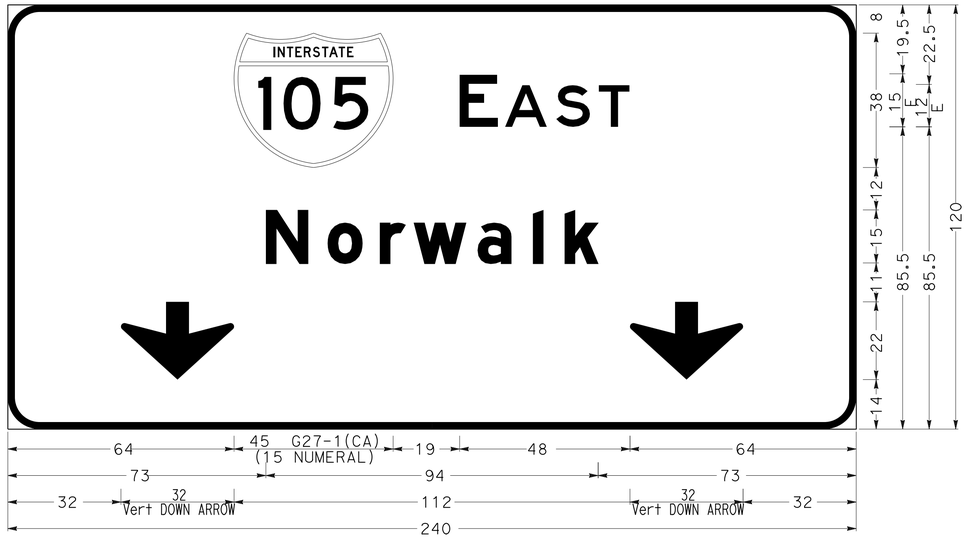

S4-1c

2.0 BORDER; 12.0 RADIUS
DIMENSION IN INCHES
WHITE LEGEND, ARROW AND BORDER
GREEN BACKGROUND

G24(CA)

S4-1d

2.0 BORDER; 12.0 RADIUS
DIMENSION IN INCHES
WHITE LEGEND, ARROW AND BORDER
GREEN BACKGROUND

G24(CA)

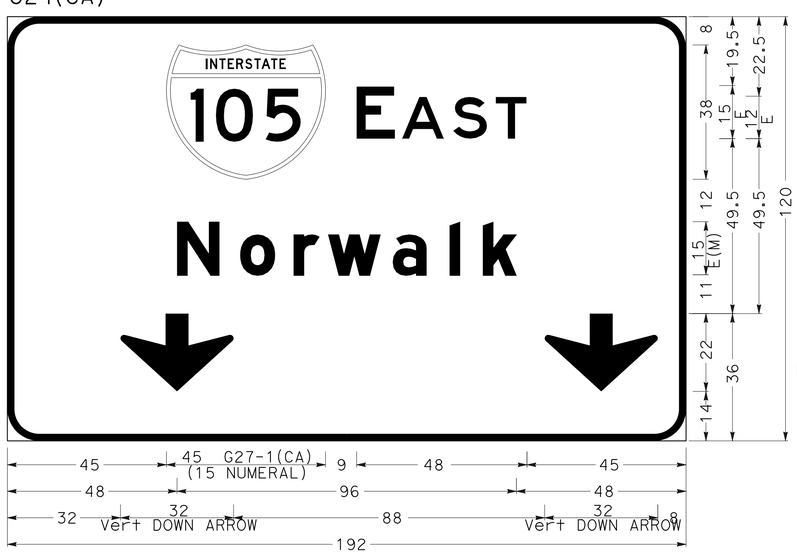

S5-1g

2.0 BORDER; 9.0 RADIUS
DIMENSION IN INCHES
WHITE LEGEND, ARROW AND BORDER
GREEN BACKGROUND

G11-5(CA)

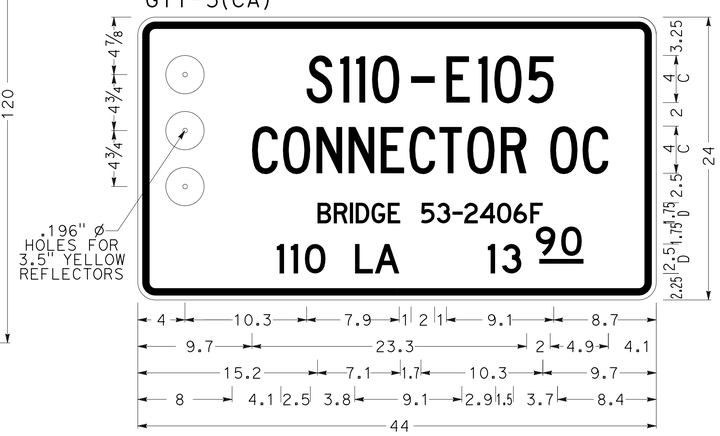

S3-2

5/8 BORDER; 3/8 MARGIN; 1½ RADIUS
DIMENSION IN INCHES
BLACK LEGEND AND BORDER
WHITE BACKGROUND
NOT REFLECTORIZED

G85(CA)(Mod)

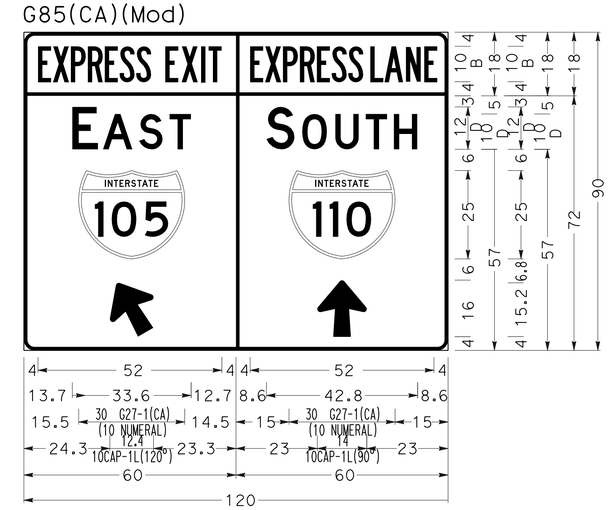

S4-2

1.0 BORDER; 3.0 RADIUS
DIMENSION IN INCHES
WHITE LEGEND, ARROWS AND BORDER
GREEN BACKGROUND

SIGN DETAIL
NO SCALE

SD-2

APPROVED FOR SIGN WORK ONLY

REVISED BY | DATE REVISED
RICHARD B. KHAW | ANH D. NGUYEN
CALCULATED-DESIGNED BY | CHECKED BY
FUNCTIONAL SUPERVISOR
MOHAMMED CHOWDHURY

STATE OF CALIFORNIA - DEPARTMENT OF TRANSPORTATION
Caltrans® TRAFFIC DESIGN

S:\design\297401\traffic\FINAL PLANS 4_1_16\729740ob002.dgn

LAST REVISION 00-00-00 | DATE PLOTTED => 30-AUG-2016 | TIME PLOTTED => 12:24

Dist	COUNTY	ROUTE	POST MILES TOTAL PROJECT	SHEET No.	TOTAL SHEETS
07	LA	105 110	R6.6/R8.0 13.2/14.7	33	93

REGISTERED CIVIL ENGINEER 6/21/16 DATE

7-1-16
PLANS APPROVAL DATE

REGISTERED PROFESSIONAL ENGINEER
ANH D. NGUYEN
No. 62370
Exp. 9/30/17
CIVIL
STATE OF CALIFORNIA

THE STATE OF CALIFORNIA OR ITS OFFICERS OR AGENTS SHALL NOT BE RESPONSIBLE FOR THE ACCURACY OR COMPLETENESS OF SCANNED COPIES OF THIS PLAN SHEET.

G24(CA)

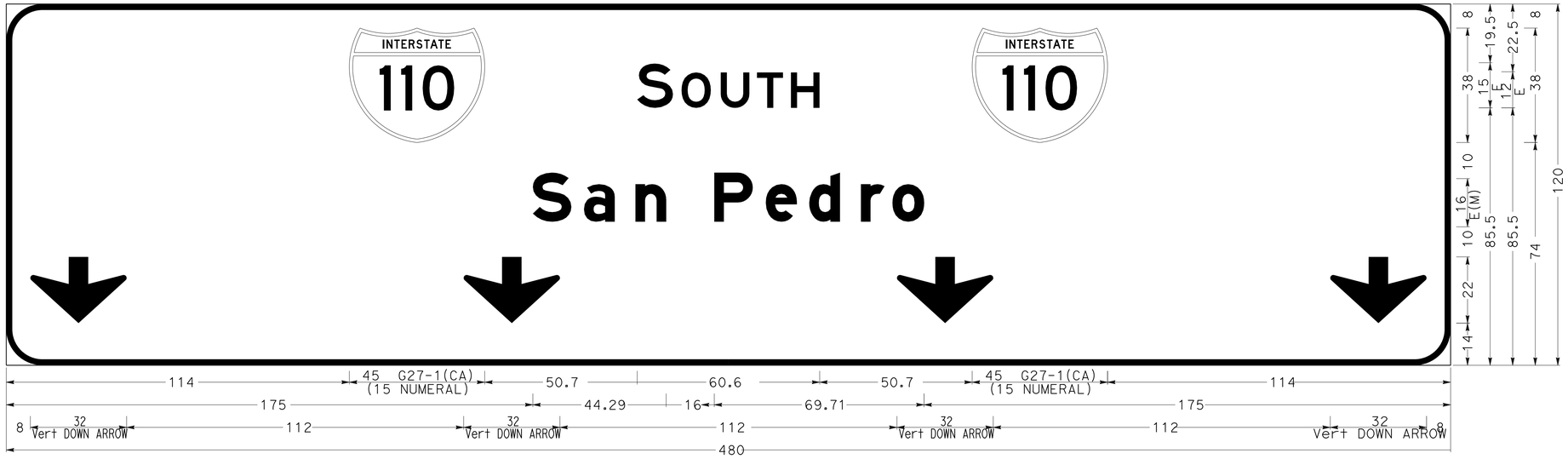

S5-1f

2.0 BORDER; 12.0 RADIUS
DIMENSION IN INCHES
WHITE LEGEND, ARROW AND BORDER
GREEN BACKGROUND

G85(CA)(Mod)

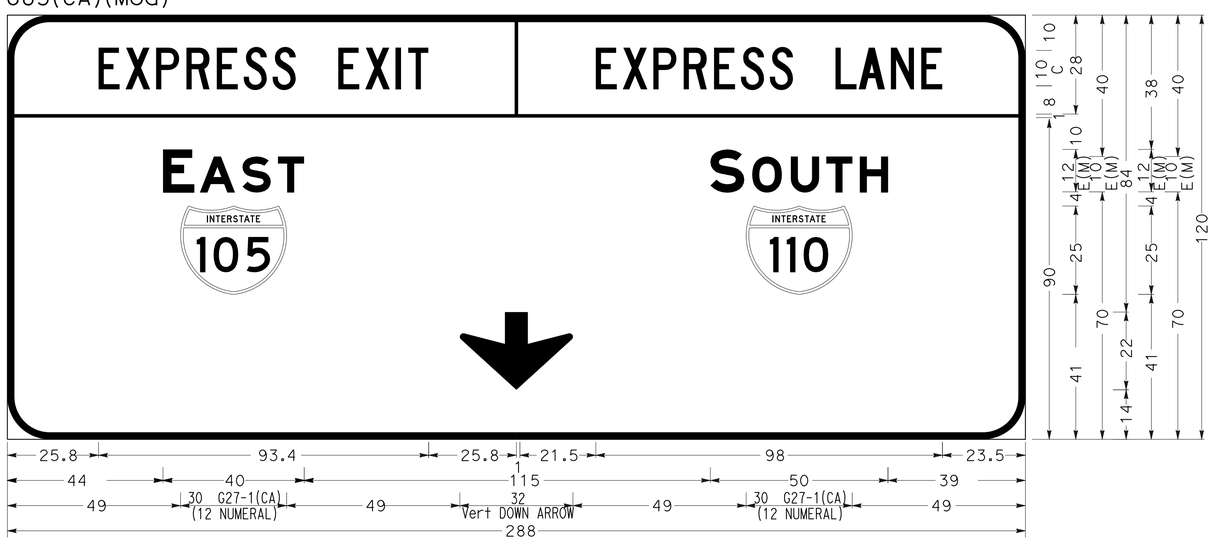

S5-1e

2.0 BORDER; 9.0 RADIUS
DIMENSION IN INCHES
WHITE LEGEND, ARROW AND BORDER
GREEN BACKGROUND

G24(CA)

S5-1h

2.0 BORDER; 9.0 RADIUS
DIMENSION IN INCHES
WHITE LEGEND, ARROW AND BORDER
GREEN BACKGROUND

SIGN DETAIL
NO SCALE

SD-3

APPROVED FOR SIGN WORK ONLY

REVISED BY | DATE REVISED
RICHARD B. KHAW | ANH D. NGUYEN
CALCULATED-DESIGNED BY | CHECKED BY
FUNCTIONAL SUPERVISOR
MOHAMMED CHOWDHURY

STATE OF CALIFORNIA - DEPARTMENT OF TRANSPORTATION
Caltrans® TRAFFIC DESIGN

S:\design\297401\traffic\FINAL PLANS 4_1_16\729740ob003.dgn

LAST REVISION 00-00-00 | DATE PLOTTED => 30-AUG-2016 | TIME PLOTTED => 12:24

Dist	COUNTY	ROUTE	POST MILES TOTAL PROJECT	SHEET No.	TOTAL SHEETS
07	LA	105,110	R6.6/R8.0 13.2/14.7	34	93

REGISTERED CIVIL ENGINEER 6/21/16 DATE

7-1-16
PLANS APPROVAL DATE

REGISTERED PROFESSIONAL ENGINEER ANH D. NGUYEN No. 62370 Exp. 9/30/17 CIVIL STATE OF CALIFORNIA

THE STATE OF CALIFORNIA OR ITS OFFICERS OR AGENTS SHALL NOT BE RESPONSIBLE FOR THE ACCURACY OR COMPLETENESS OF SCANNED COPIES OF THIS PLAN SHEET.

G85(CA)(Mod)

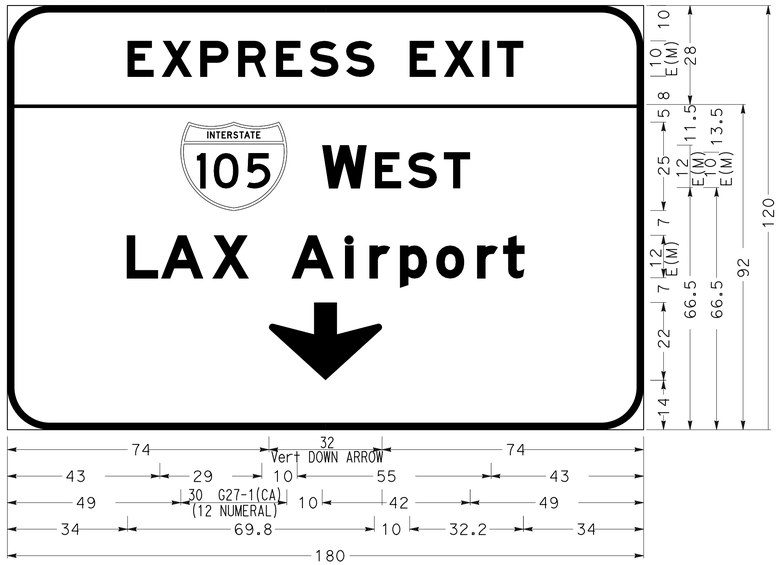

S5-2f

2.0 BORDER; 9.0 RADIUS
DIMENSION IN INCHES
WHITE LEGEND, ARROW AND BORDER
GREEN BACKGROUND

G85(CA)(Mod)

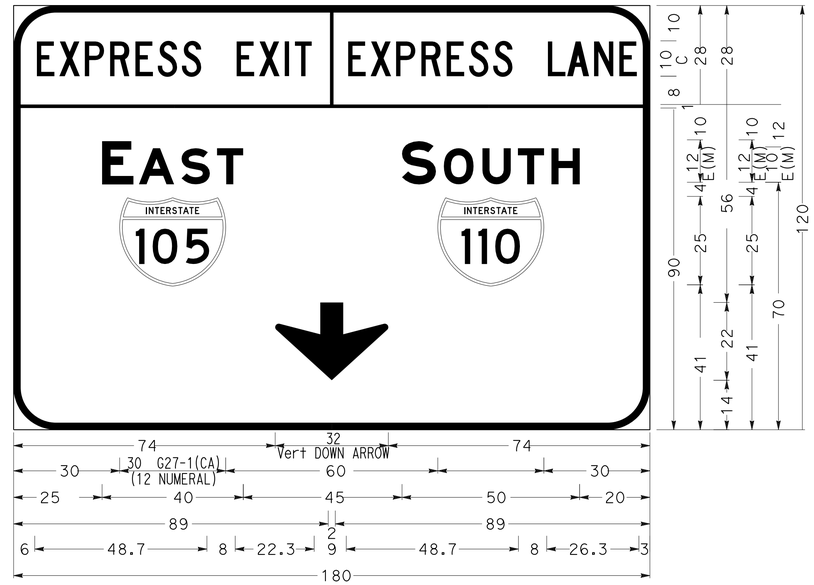

S5-2g

2.0 BORDER; 9.0 RADIUS
DIMENSION IN INCHES
WHITE LEGEND, ARROW AND BORDER
GREEN BACKGROUND

G24(CA)

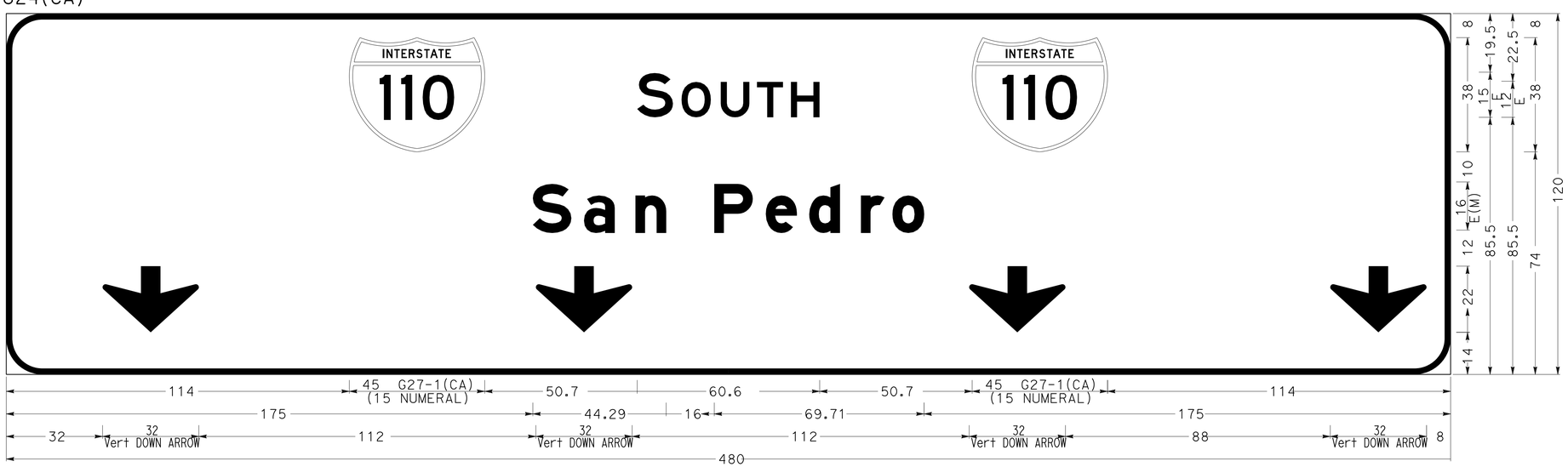

S5-2h

2.0 BORDER; 12.0 RADIUS
DIMENSION IN INCHES
WHITE LEGEND, ARROW AND BORDER
GREEN BACKGROUND

APPROVED FOR SIGN WORK ONLY

SIGN DETAIL

NO SCALE

SD-4

REVISED BY	DATE REVISED
RICHARD B. KHAW	ANH D. NGUYEN
CALCULATED-DESIGNED BY	CHECKED BY

FUNCTIONAL SUPERVISOR: MOHAMMED CHOWDHURY

STATE OF CALIFORNIA - DEPARTMENT OF TRANSPORTATION
Caltrans® TRAFFIC DESIGN

S:\design\297401\traffic\FINAL PLANS 4_1_16\729740ob004.dgn

LAST REVISION 00-00-00 | DATE PLOTTED => 30-AUG-2016 | TIME PLOTTED => 12:24

Dist	COUNTY	ROUTE	POST MILES TOTAL PROJECT	SHEET No.	TOTAL SHEETS
07	LA	105,110	R6.6/R8.0 13.2/14.7	35	93

REGISTERED CIVIL ENGINEER 6/21/16 DATE

7-1-16
PLANS APPROVAL DATE

REGISTERED PROFESSIONAL ENGINEER ANH D. NGUYEN No. 62370 Exp. 9/30/17 CIVIL STATE OF CALIFORNIA

THE STATE OF CALIFORNIA OR ITS OFFICERS OR AGENTS SHALL NOT BE RESPONSIBLE FOR THE ACCURACY OR COMPLETENESS OF SCANNED COPIES OF THIS PLAN SHEET.

G24(CA)

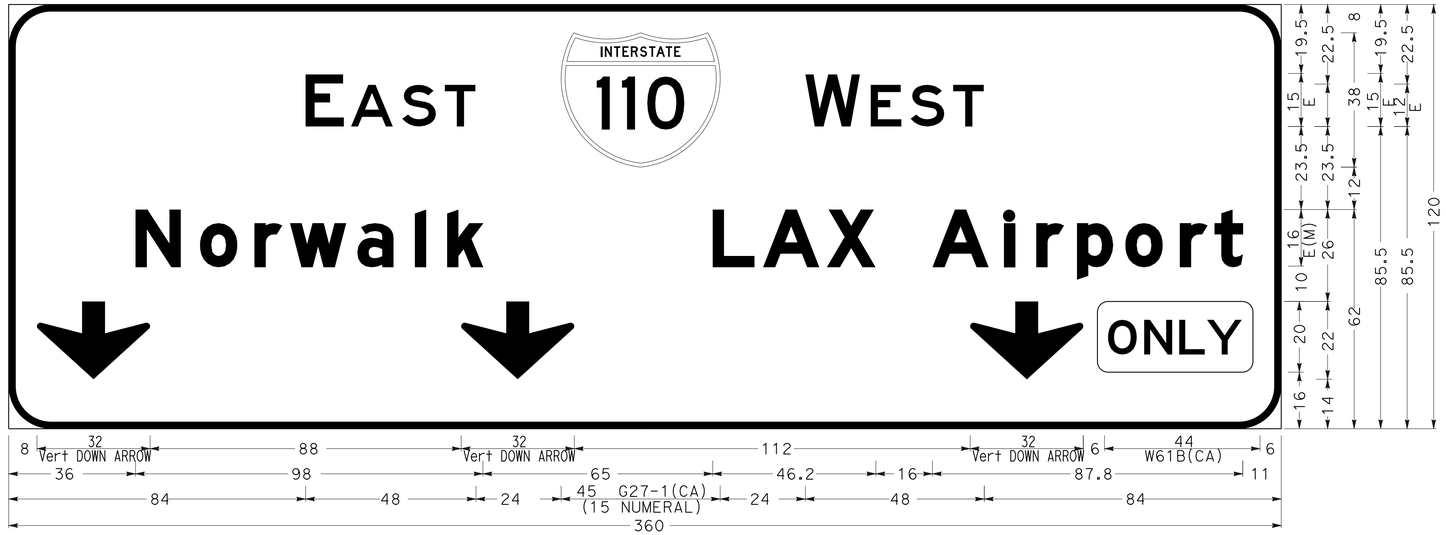

S5-2i

2.0 BORDER; 12.0 RADIUS
DIMENSION IN INCHES
WHITE LEGEND, ARROW AND BORDER
GREEN BACKGROUND

G85(CA)

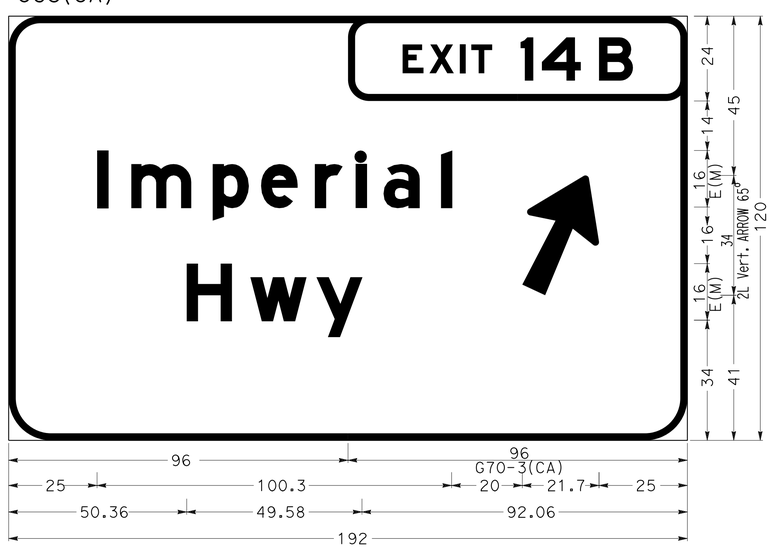

S5-2j

2.0 BORDER; 9.0 RADIUS
DIMENSION IN INCHES
WHITE LEGEND, ARROW AND BORDER
GREEN BACKGROUND

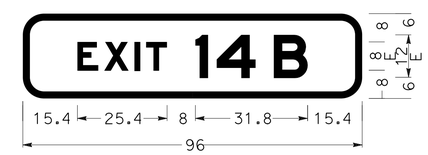

G70-3(CA)

2.0 BORDER; 6.0 RADIUS
DIMENSION IN INCHES
BORDER & LEGEND WHITE
BACKGROUND GREEN

APPROVED FOR SIGN WORK ONLY

SIGN DETAIL
NO SCALE

SD-5

REVISED BY | DATE REVISED
RICHARD B. KHAW | ANH D. NGUYEN
CALCULATED-DESIGNED BY | CHECKED BY
FUNCTIONAL SUPERVISOR
MOHAMMED CHOWDHURY

STATE OF CALIFORNIA - DEPARTMENT OF TRANSPORTATION
Caltrans® TRAFFIC DESIGN

S:\design\297401\traffic\FINAL PLANS 4_1_16\729740ob005.dgn

LAST REVISION 00-00-00 | DATE PLOTTED => 30-AUG-2016 TIME PLOTTED => 12:24

Dist	COUNTY	ROUTE	POST MILES TOTAL PROJECT	SHEET No.	TOTAL SHEETS
07	LA	105,110	R6.6/R8.0 13.2/14.7	36	93

REGISTERED CIVIL ENGINEER 6/21/16 DATE

7-1-16
PLANS APPROVAL DATE

REGISTERED PROFESSIONAL ENGINEER ANH D. NGUYEN No. 62370 Exp. 9/30/17 CIVIL STATE OF CALIFORNIA

THE STATE OF CALIFORNIA OR ITS OFFICERS OR AGENTS SHALL NOT BE RESPONSIBLE FOR THE ACCURACY OR COMPLETENESS OF SCANNED COPIES OF THIS PLAN SHEET.

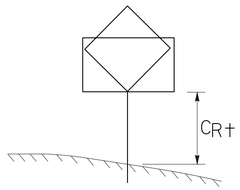

TYPICAL POST HEIGHT DETAIL

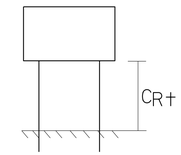

TYPICAL POST HEIGHT DETAIL

SUMMARY OF SIGN QUANTITIES

SHEET No.	SIGN No.	SIGN PANEL	LOCATION STATION	LOCATION DIRECTION	SIGN CODE	PANEL SIZE (L X D) INCH x INCH	SINGLE FACED	SIGN FACING MATERIAL BACKGROUND SHEETING COLOR	SIGN FACING MATERIAL BACKGROUND RETROREFLECTIVE ASTM TYPE	SIGN FACING MATERIAL LEGEND SHEETING COLOR	SIGN FACING MATERIAL LEGEND RETROREFLECTIVE ASTM TYPE	SIGN FACING MATERIAL GRAFFITI FILM PREMIUM	POST DATA CLEARANCE (C) R+ FT	POST DATA SIZE INCH x INCH	POST DATA TOTAL LENGTH L+ FT	POST DATA TOTAL LENGTH R+ FT	FURNISH SINGLE SHEET ALUMINUM SIGN (0.063" - UNFRAMED) SQFT	FURNISH SINGLE SHEET ALUMINUM SIGN (0.080" - FRAMED) FOR RETROREFLECTIVE SHEETING (TYPE XI) SQFT	FURNISH LAMINATED PANEL SIGN (1"- TYPE A) FOR RETROREFLECTIVE SHEETING (TYPE XI) SQFT	RETROREFLECTIVE SHEETING (TYPE XI) SQFT	ROADSIDE SIGN - ONE POST EA	ROADSIDE SIGN - TWO POST EA	INSTALL SIGN PANEL ON EXISTING FRAME SQFT	REMOVE ROADSIDE SIGN (WOOD POST) EA	REMOVE SIGN FROM SIGN FRAME EA	REMARKS
S-1	S1-1	a	218+18.84 "A" LINE	FNBT	G24(CA)																				1	
		b			G85(CA)																				1	
		c	218+18.84 "A" LINE	FNBT	G24(CA)	144 X 100	*	GREEN	XI	WHITE	XI	*							100.0	100.0			100.0			SIGN Spec, SEE SHEET SD-1
		d			G85(CA)	144 X 100	*	GREEN	XI	WHITE	XI	*							100.0	100.0			100.0			SIGN Spec, SEE SHEET SD-1
S-2	S2-1	a	285+63.95 "B" LINE	FWBT	G83(CA)																				1	
		b			G85(CA)																				1	
		c	285+63.85 "B" LINE	FWBT	G83(CA)	168 X 80	*	GREEN	XI	WHITE	XI	*							93.4	93.4			93.4			SIGN Spec, SEE SHEET SD-1
		d			G85(CA)	180 X 80	*	GREEN	XI	WHITE	XI	*							100.0	100.0			100.0			SIGN Spec, SEE SHEET SD-1
S-3	S3-1			FSBT	G11(CA)																			1		
	S3-2			FSBT	G11-5(CA)	44 X 24	*	WHITE	VIII	BLACK		*	5	4 X 4	10.5		7.3				1					SIGN Spec, SEE SHEET SD-2
	S3-3			FSBT	SW60(CA)																			1		
	S3-4			FSBT	SW60(CA)	48 X 48	*	YELLOW	XI	BLACK		*	7	6 X 6	17.7			16.0		16.0	1					
S-4	S4-1	a	256+13.33 "A" LINE	FSBT	G24(CA)																				1	
		b			G24(CA)																				1	
		c	256+13.33 "A" LINE	FSBT	G24(CA)		*	GREEN	XI	WHITE	XI	*							200.0	200.0			200.0			SIGN Spec, SEE SHEET SD-2
		d			G24(CA)	240 X 120	*	GREEN	XI	WHITE	XI	*							200.0	200.0			200.0			SIGN Spec, SEE SHEET SD-2
SHEET TOTAL																	7.3	16.0	793.4	809.4	2		793.4	2	6	

SIGN QUANTITIES

SQ-1

REVISED BY	DATE REVISED

CALCULATED-DESIGNED BY	JAMES M. CANALITA
CHECKED BY	ANH D. NGUYEN
FUNCTIONAL SUPERVISOR	MOHAMMED CHOWDHURY

STATE OF CALIFORNIA - DEPARTMENT OF TRANSPORTATION
Caltrans® TRAFFIC DESIGN

S:\desig\729740\traffic\FINAL PLANS 4_1_16\729740oc001.dgn

LAST REVISION 00-00-00 | DATE PLOTTED => 30-AUG-2016 | TIME PLOTTED => 12:24

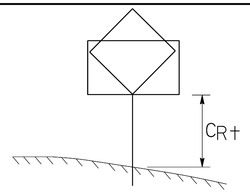

TYPICAL POST HEIGHT DETAIL

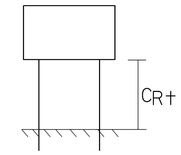

TYPICAL POST HEIGHT DETAIL

Dist	COUNTY	ROUTE	POST MILES TOTAL PROJECT	SHEET No.	TOTAL SHEETS
07	LA	105,110	R6.6/R8.0 13.2/14.7	37	93

REGISTERED CIVIL ENGINEER 6/21/16 DATE

7-1-16
PLANS APPROVAL DATE

REGISTERED PROFESSIONAL ENGINEER ANH D. NGUYEN No. 62370 Exp. 9/30/17 CIVIL STATE OF CALIFORNIA

THE STATE OF CALIFORNIA OR ITS OFFICERS OR AGENTS SHALL NOT BE RESPONSIBLE FOR THE ACCURACY OR COMPLETENESS OF SCANNED COPIES OF THIS PLAN SHEET.

SUMMARY OF SIGN QUANTITIES

SHEET No.	SIGN No.	SIGN PANEL	LOCATION STATION	LOCATION DIRECTION	SIGN CODE	PANEL SIZE (L X D) INCH x INCH	SINGLE FACED	SIGN FACING MATERIAL BACKGROUND SHEETING COLOR	SIGN FACING MATERIAL BACKGROUND RETROREFLECTIVE ASTM TYPE	SIGN FACING MATERIAL LEGEND SHEETING COLOR	SIGN FACING MATERIAL LEGEND RETROREFLECTIVE ASTM TYPE	SIGN FACING MATERIAL GRAFFITI FILM PREMIUM	POST DATA CLEARANCE (C) R† FT	POST DATA SIZE INCH x INCH	POST DATA TOTAL LENGTH L† FT	POST DATA TOTAL LENGTH R† FT	FURNISH SINGLE SHEET ALUMINUM SIGN (0.063" - UNFRAMED) SQFT	FURNISH SINGLE SHEET ALUMINUM SIGN (0.080" - FRAMED) FOR RETROREFLECTIVE SHEETING (TYPE XI) SQFT	FURNISH LAMINATED PANEL SIGN (1"- TYPE A) FOR RETROREFLECTIVE SHEETING (TYPE XI) SQFT	RETROREFLECTIVE SHEETING (TYPE XI) SQFT	ROADSIDE SIGN - ONE POST EA	ROADSIDE SIGN - TWO POST EA	INSTALL SIGN PANEL ON EXISTING FRAME SQFT	REMOVE ROADSIDE SIGN (WOOD POST) EA	REMOVE SIGN FROM SIGN FRAME EA	REMARKS
S-4	S4-2		263+65.00 "A" LINE	FSBT	G85(CA)(Mod)	120 X 90	*	GREEN	XI	WHITE	XI	*	7.0	6 X 8	20.5	20.5		75.0		75.0		1				SIGN Spec, SEE SHEET SD-2
S-5	S5-1	a	266+09.48 "A" LINE	FSBT	G85(CA)(Mod)																				1	
		b			G24(CA)																				1	
		c			G24(CA)																				1	
		d			G24(CA)																				1	
		e	266+09.48 "A" LINE	FSBT	G85(CA)(Mod)	288 X 120	*	GREEN	XI	WHITE	XI	*							240.0	240.0			240.0			SIGN Spec, SEE SHEET SD-3
		f			G24(CA)	480 X 120	*	GREEN	XI	WHITE	XI	*							400.0	400.0			400.0			SIGN Spec, SEE SHEET SD-3
		g			G24(CA)	192 X 120	*	GREEN	XI	WHITE	XI	*							160.0	160.0			160.0			SIGN Spec, SEE SHEET SD-2
		h			G24(CA)	216 X 120	*	GREEN	XI	WHITE	XI	*							180.0	180.0			180.0			SIGN Spec, SEE SHEET SD-3
	S5-2	a	275+16.96 "A" LINE	FSBT	G85(CA)(Mod)																				1	
		b			G85(CA)(Mod)																				1	
		c			G24(CA)																				1	
		d			G24(CA)																				1	
		e			G85(CA)																				1	
		f	275+16.96 "A" LINE	FSBT	G85(CA)(Mod)	180 X 120	*	GREEN	XI	WHITE	XI	*							150.0	150.0			150.0			SIGN Spec, SEE SHEET SD-4
		g			G85(CA)(Mod)	180 X 120	*	GREEN	XI	WHITE	XI	*							150.0	150.0			150.0			SIGN Spec, SEE SHEET SD-4
		h			G24(CA)	480 X 120	*	GREEN	XI	WHITE	XI	*							400.0	400.0			400.0			SIGN Spec, SEE SHEET SD-4
		i			G24(CA)	360 X 120	*	GREEN	XI	WHITE	XI	*							300.0	300.0			300.0			SIGN Spec, SEE SHEET SD-5
		j			G85(CA)	192 X 120	*	GREEN	XI	WHITE	XI	*							160.0	160.0			160.0			SIGN Spec, SEE SHEET SD-5
SHEET TOTAL																		75.0	2,412.0	2,215.0		1	2,140.0		9	
SHEET TOTAL FROM SQ-1																	7.3	16.0	793.4	809.4	2		793.4	2	6	
GRAND TOTAL																	7.3	91.0	2,933.4	3,024.4	2	1	2,933.4	2	15	

SIGN QUANTITIES

SQ-2

REVISED BY | DATE REVISED

JAMES M. CANALITA | ANH D. NGUYEN

CALCULATED-DESIGNED BY | CHECKED BY

FUNCTIONAL SUPERVISOR: MOHAMMED CHOWDHURY

STATE OF CALIFORNIA - DEPARTMENT OF TRANSPORTATION
Caltrans® TRAFFIC DESIGN

S:\design\297401\traffic\FINAL PLANS 4_1_16\729740oc002.dgn

LAST REVISION 00-00-00 | DATE PLOTTED => 30-AUG-2016 | TIME PLOTTED => 12:24

Dist	COUNTY	ROUTE	POST MILES TOTAL PROJECT	SHEET No.	TOTAL SHEETS
07	LA	105,110	R6.6/R8.0 13.2/14.7	38	93

REGISTERED CIVIL ENGINEER 6/21/16 DATE

7-1-16
PLANS APPROVAL DATE

REGISTERED PROFESSIONAL ENGINEER ANH D. NGUYEN No. 62370 Exp. 9/30/17 CIVIL STATE OF CALIFORNIA

THE STATE OF CALIFORNIA OR ITS OFFICERS OR AGENTS SHALL NOT BE RESPONSIBLE FOR THE ACCURACY OR COMPLETENESS OF SCANNED COPIES OF THIS PLAN SHEET.

SUMMARY OF ROADWAY QUANTITIES

SHEET NO.	SIGN No.	LOCATION No.	LOCATION DIRECTION/ ROUTE	LOCATION STATION	ROADWAY EXCAVATION	MINOR HOT MIX ASPHALT	PLACE HOT MIX ASPHALT DIKE (TYPE C)	VEGETATION CONTROL (MINOR CONCRETE)	MINOR CONCRETE (MINOR STRUCTURE)	MIDWEST GUARDRAIL SYSTEM (WOOD POST)	TRANSITION RAILING (TYPE WB-31)	END ANCHOR ASSEMBLY (TYPE SFT)	ALTERNATIVE FLARED TERMINAL SYSTEM	BURIED POST END ANCHOR (N)	REMOVE GUARDRAIL	REMOVE ASPHALT CONCRETE DIKE	TREATED WOOD WASTE	TEMPORARY DRAINAGE INLET PROTECTION	GUARD RAILING DELINEATOR
					CY	TON	LF	SQYD	CY	LF	EA	EA	EA	EA		LF	LB	EA	EA
L-1		1	EB Rte 105	179+50.00		0.69	90.5	69.8		112.5		1		1		90.5			4
L-2		2A	SB Rte 110	249+20.00	1.48	0.19		49.7	3.46	25.0	1		1		87.5	10.0	1,540		3
L-2		2B	SB Rte 110	249+40.00	0.83	0.09		49.7	1.88	25.0	1		1		75.0		1,330		3
L-3		3	NB Rte 110	217+50.00				109.3		137.5		1		1	62.5		1,120	1	5
S-3	S3-1																60		
S-3	S3-3																60		
E-1																		7	
E-2																		11	
E-3																		2	
E-4																		3	
E-5																		2	
E-6																		3	
E-7																		1	
TOTAL					2.31	0.97	90.5	278.5	5.34	300.0	2	2	2	2	225.0	100.5	4,110	30	15

(N) NOT A SEPARATE PAY ITEM, FOR INFORMATION ONLY.

REVISED BY | DATE REVISED

JAMES M. CANALITA | ANH D. NGUYEN

CALCULATED-DESIGNED BY | CHECKED BY

FUNCTIONAL SUPERVISOR: MOHAMMED CHOWDHURY

STATE OF CALIFORNIA - DEPARTMENT OF TRANSPORTATION
Caltrans TRAFFIC DESIGN

S:\design\729740\traffic\FINAL PLANS 4_1_16\729740pa001.dgn

SUMMARY OF QUANTITIES
Q-1

LAST REVISION 00-00-00 | DATE PLOTTED => 30-AUG-2016 | TIME PLOTTED => 12:24

Dist	COUNTY	ROUTE	POST MILES TOTAL PROJECT	SHEET No.	TOTAL SHEETS
07	LA	105,110	R6.6/R8.0 13.2/14.7	39	93

REGISTERED ELECTRICAL ENGINEER 6/21/16 DATE

7-1-16
PLANS APPROVAL DATE

REGISTERED PROFESSIONAL ENGINEER CESAR HERNANDEZ No. 15805 Exp. 12/31/16 ELECTRICAL STATE OF CALIFORNIA

THE STATE OF CALIFORNIA OR ITS OFFICERS OR AGENTS SHALL NOT BE RESPONSIBLE FOR THE ACCURACY OR COMPLETENESS OF SCANNED COPIES OF THIS PLAN SHEET.

NOTES: (THIS SHEET)

1. FOR ACCURATE RIGHT OF WAY DATA, CONTACT RIGHT OF WAY ENGINEERING AT THE DISTRICT OFFICE.
2. SEE WIRING DIAGRAM PLANS.
3. SEE ELECTRICAL DETAIL PLANS.

NOTE: (SHEETS E-1 TO E-7)

1. ALL NEW PULL BOX COVERS MUST BE THE TAMPER RESISTANT TYPE.

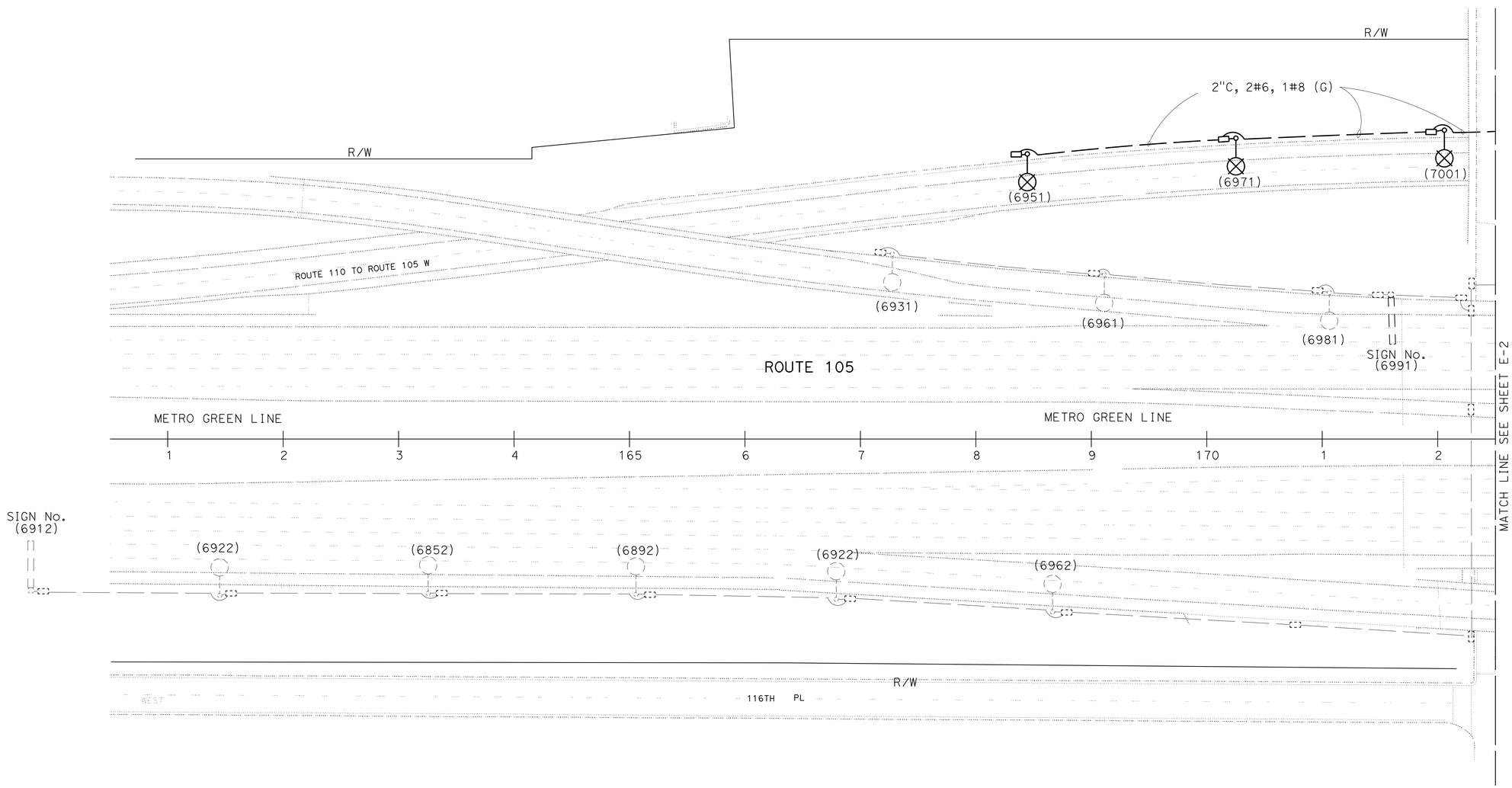

LIGHTING SYSTEM

SCALE 1"=50'

APPROVED FOR ELECTRICAL WORK ONLY

E-1

STATE OF CALIFORNIA - DEPARTMENT OF TRANSPORTATION
Caltrans
TRAFFIC DESIGN

FUNCTIONAL SUPERVISOR: FATEMEH ANSARI
CALCULATED-DESIGNED BY: X. NARANJO
CHECKED BY: CESAR HERNANDEZ
REVISED BY
DATE REVISED

LAST REVISION 00-00-00
DATE PLOTTED => 30-AUG-2016
TIME PLOTTED => 12:24

Dist	COUNTY	ROUTE	POST MILES TOTAL PROJECT	SHEET No.	TOTAL SHEETS
07	LA	105,110	R6.6/R8.0 13.2/14.7	40	93

REGISTERED ELECTRICAL ENGINEER 6/21/16 DATE

7-1-16
PLANS APPROVAL DATE

REGISTERED PROFESSIONAL ENGINEER
CESAR HERNANDEZ
No. 15805
Exp. 12/31/16
ELECTRICAL
STATE OF CALIFORNIA

THE STATE OF CALIFORNIA OR ITS OFFICERS OR AGENTS SHALL NOT BE RESPONSIBLE FOR THE ACCURACY OR COMPLETENESS OF SCANNED COPIES OF THIS PLAN SHEET.

NOTES: (THIS SHEET)

1. FOR ACCURATE RIGHT OF WAY DATA, CONTACT RIGHT OF WAY ENGINEERING AT THE DISTRICT OFFICE.
2. SEE WIRING DIAGRAM PLANS.
3. SEE ELECTRICAL DETAIL PLANS.

HIGH MAST POLE	HEIGHT (ft)
LOC 1	100
LOC 2	160

PP No. 349422M

Exist 120 / 240 V SERVICE IN
TYPE III-BF ENCLOSURE
100 A, 240 V, 2P, MAIN CB
2-40 A, 240V, 2P, LIGHTING
1-40 A, 240V, 2P, SIGN
1-20 A, 120V, 1P, TMS
1-20 A, 120V, 1P, RMS
1-20 A, 120V, 1P, DBOX
ADDRESS: 11426 ½ S. HOOVER St.
CTID: 07-53-105-007.030

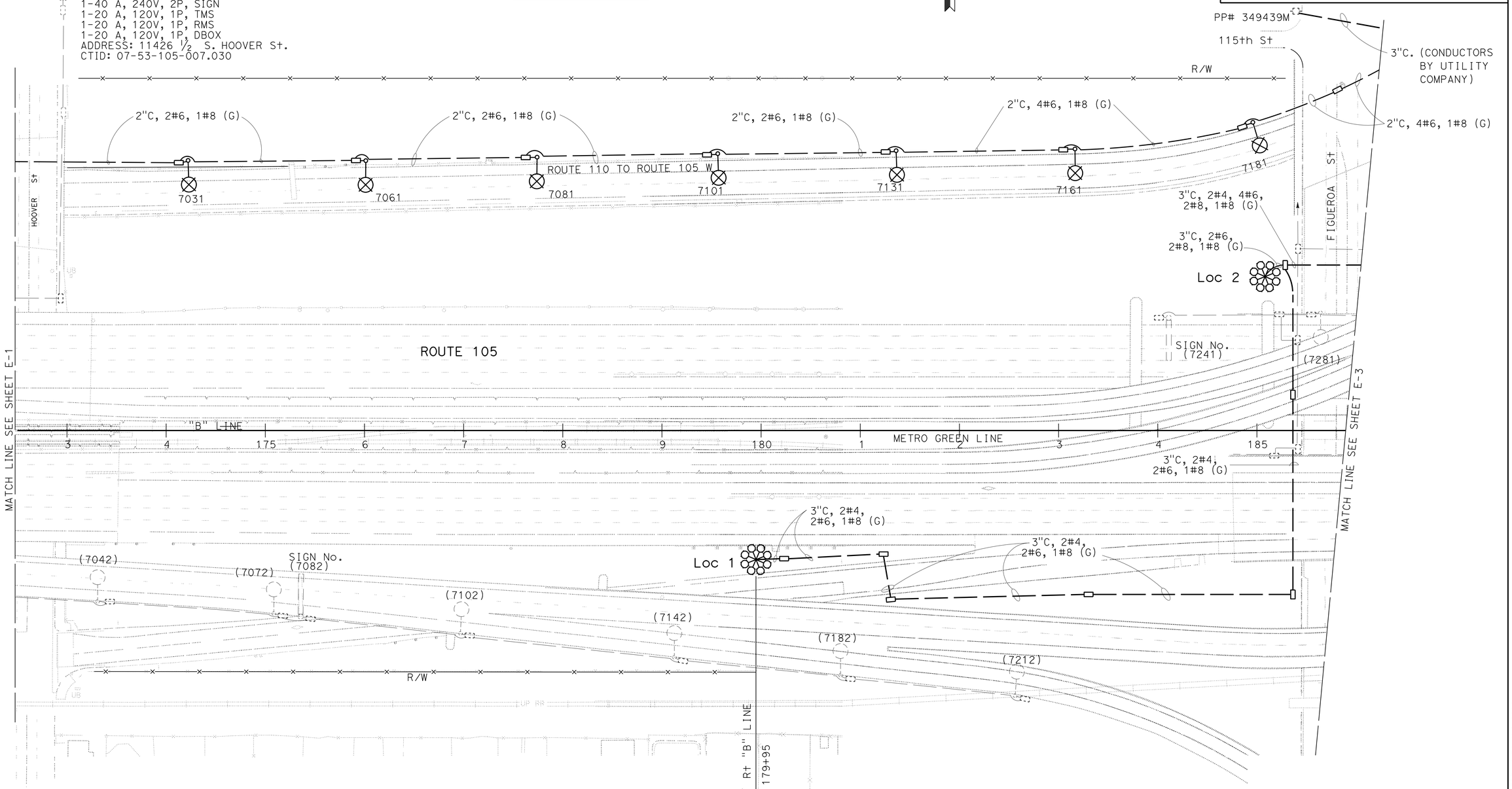

LIGHTING SYSTEM

SCALE 1"=50'

APPROVED FOR ELECTRICAL WORK ONLY

E-2

STATE OF CALIFORNIA - DEPARTMENT OF TRANSPORTATION
Caltrans
TRAFFIC DESIGN

FUNCTIONAL SUPERVISOR: FATEMEH ANSARI
CALCULATED-DESIGNED BY: X. NARANJO
CHECKED BY: CESAR HERNANDEZ
REVISED BY
DATE REVISED

LAST REVISION 00-00-00
DATE PLOTTED => 30-AUG-2016
TIME PLOTTED => 12:24

Dist	COUNTY	ROUTE	POST MILES TOTAL PROJECT	SHEET No.	TOTAL SHEETS
07	LA	105,110	R6.6/R8.0 13.2/14.7	41	93

REGISTERED ELECTRICAL ENGINEER 6/21/16 DATE

7-1-16
PLANS APPROVAL DATE

REGISTERED PROFESSIONAL ENGINEER CESAR HERNANDEZ No. 15805 Exp. 12/31/16 ELECTRICAL STATE OF CALIFORNIA

THE STATE OF CALIFORNIA OR ITS OFFICERS OR AGENTS SHALL NOT BE RESPONSIBLE FOR THE ACCURACY OR COMPLETENESS OF SCANNED COPIES OF THIS PLAN SHEET.

NOTES: (THIS SHEET)

1. FOR ACCURATE RIGHT OF WAY DATA, CONTACT RIGHT OF WAY ENGINEERING AT THE DISTRICT OFFICE.
2. SEE WIRING DIAGRAM PLANS.
3. SEE ELECTRICAL DETAIL PLANS.

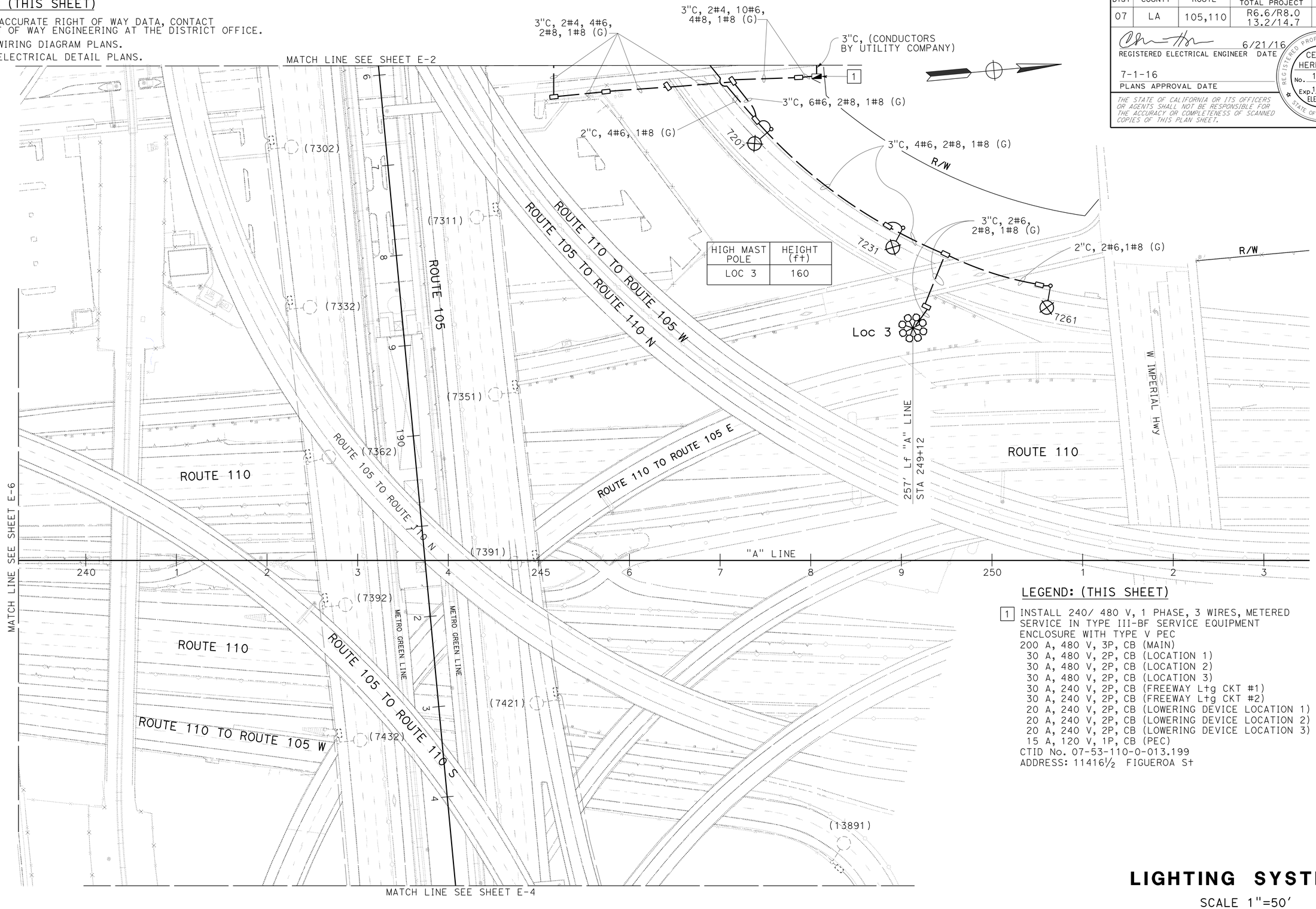

HIGH MAST POLE	HEIGHT (ft)
LOC 3	160

LEGEND: (THIS SHEET)

1 INSTALL 240/ 480 V, 1 PHASE, 3 WIRES, METERED SERVICE IN TYPE III-BF SERVICE EQUIPMENT ENCLOSURE WITH TYPE V PEC
200 A, 480 V, 3P, CB (MAIN)
30 A, 480 V, 2P, CB (LOCATION 1)
30 A, 480 V, 2P, CB (LOCATION 2)
30 A, 480 V, 2P, CB (LOCATION 3)
30 A, 240 V, 2P, CB (FREEWAY Ltg CKT #1)
30 A, 240 V, 2P, CB (FREEWAY Ltg CKT #2)
20 A, 240 V, 2P, CB (LOWERING DEVICE LOCATION 1)
20 A, 240 V, 2P, CB (LOWERING DEVICE LOCATION 2)
20 A, 240 V, 2P, CB (LOWERING DEVICE LOCATION 3)
15 A, 120 V, 1P, CB (PEC)
CTID No. 07-53-110-0-013.199
ADDRESS: 11416½ FIGUEROA St

LIGHTING SYSTEM

SCALE 1"=50'

APPROVED FOR ELECTRICAL WORK ONLY

E-3

STATE OF CALIFORNIA - DEPARTMENT OF TRANSPORTATION
Caltrans® **TRAFFIC DESIGN**

FUNCTIONAL SUPERVISOR: FATEMEH ANSARI
CALCULATED-DESIGNED BY: X. NARANJO
CHECKED BY: CESAR HERNANDEZ
REVISED BY / DATE REVISED

LAST REVISION 00-00-00
DATE PLOTTED => 30-AUG-2016
TIME PLOTTED => 12:24

Dist	COUNTY	ROUTE	POST MILES TOTAL PROJECT	SHEET No.	TOTAL SHEETS
07	LA	105,110	R6.6/R8.0 13.2/14.7	42	93

REGISTERED ELECTRICAL ENGINEER 6/21/16 DATE

7-1-16
PLANS APPROVAL DATE

REGISTERED PROFESSIONAL ENGINEER CESAR HERNANDEZ No. 15805 Exp. 12/31/16 ELECTRICAL STATE OF CALIFORNIA

THE STATE OF CALIFORNIA OR ITS OFFICERS OR AGENTS SHALL NOT BE RESPONSIBLE FOR THE ACCURACY OR COMPLETENESS OF SCANNED COPIES OF THIS PLAN SHEET.

NOTES: (THIS SHEET ONLY)

1. FOR ACCURATE RIGHT OF WAY DATA, CONTACT RIGHT OF WAY ENGINEERING AT THE DISTRICT OFFICE.
2. SEE ELECTRICAL DETAIL PLANS.

LEGEND: (THIS SHEET)

1 INSTALL 240/ 480 V, 1 PHASE, 3 WIRES, METERED SERVICE IN TYPE III-BF SERVICE EQUIPMENT ENCLOSURE WITH TYPE V PEC
200 A, 480 V, 3P, CB (MAIN)
30 A, 480 V, 2P, CB (LOCATION 4)
30 A, 480 V, 2P, CB (LOCATION 5)
30 A, 480 V, 2P, CB (LOCATION 6)
20 A, 240 V, 2P, CB (LOWERING DEVICE LOCATION 4)
20 A, 240 V, 2P, CB (LOWERING DEVICE LOCATION 5)
20 A, 240 V, 2P, CB (LOWERING DEVICE-LOCATION 6)
15 A, 120 V, 1P, CB (PEC)
CTID No. 07-53-105-0-007.21
ADDRESS: 11540½ BROADWAY

2 INSTALL 120/ 240 V, 1 PHASE, 3 WIRES, METERED SERVICE IN TYPE III-BF SERVICE EQUIPMENT ENCLOSURE WITH TYPE V PEC
200 A, 240 V, 3P, CB (MAIN)
30 A, 240 V, 2P, CB (LOCATION 7)
20 A, 240 V, 2P, CB (LOWERING DEVICE LOCATION 7)
15 A, 120 V, 1P, CB (PEC)
CTID No. 07-53-105-0-007.35
ADDRESS: 11704½S SPRING St

HIGH MAST POLE	HEIGHT (ft)
LOC 4	160
LOC 5	160
LOC 6	100
LOC 7	100

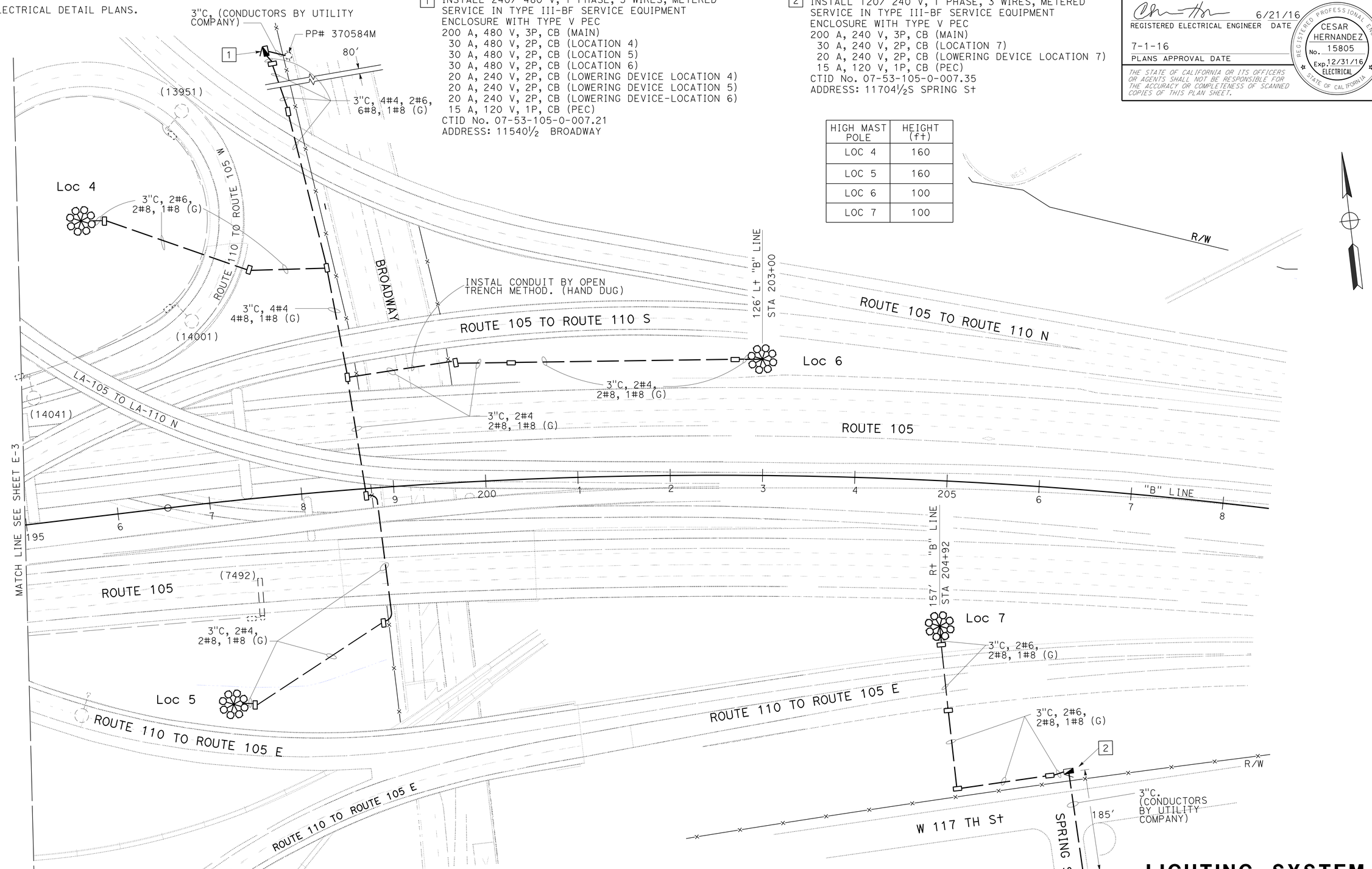

LIGHTING SYSTEM

SCALE 1"=50'

APPROVED FOR ELECTRICAL WORK ONLY

E-4

STATE OF CALIFORNIA - DEPARTMENT OF TRANSPORTATION
Caltrans® **TRAFFIC DESIGN**
FUNCTIONAL SUPERVISOR: FATEMEH ANSARI
CALCULATED-DESIGNED BY: X. NARANJO
CHECKED BY: CESAR HERNANDEZ
REVISED BY / DATE REVISED

LAST REVISION 00-00-00 | DATE PLOTTED => 30-AUG-2016 | TIME PLOTTED => 12:24

Dist	COUNTY	ROUTE	POST MILES TOTAL PROJECT	SHEET No.	TOTAL SHEETS
07	LA	105,110	R6.6/R8.0 13.2/14.7	43	93

REGISTERED ELECTRICAL ENGINEER 6/21/16 DATE

7-1-16
PLANS APPROVAL DATE

REGISTERED PROFESSIONAL ENGINEER
CESAR HERNANDEZ
No. 15805
Exp. 12/31/16
ELECTRICAL
STATE OF CALIFORNIA

THE STATE OF CALIFORNIA OR ITS OFFICERS OR AGENTS SHALL NOT BE RESPONSIBLE FOR THE ACCURACY OR COMPLETENESS OF SCANNED COPIES OF THIS PLAN SHEET.

NOTE: (THIS SHEET)

1. FOR ACCURATE RIGHT OF WAY DATA, CONTACT RIGHT OF WAY ENGINEERING AT THE DISTRICT OFFICE.

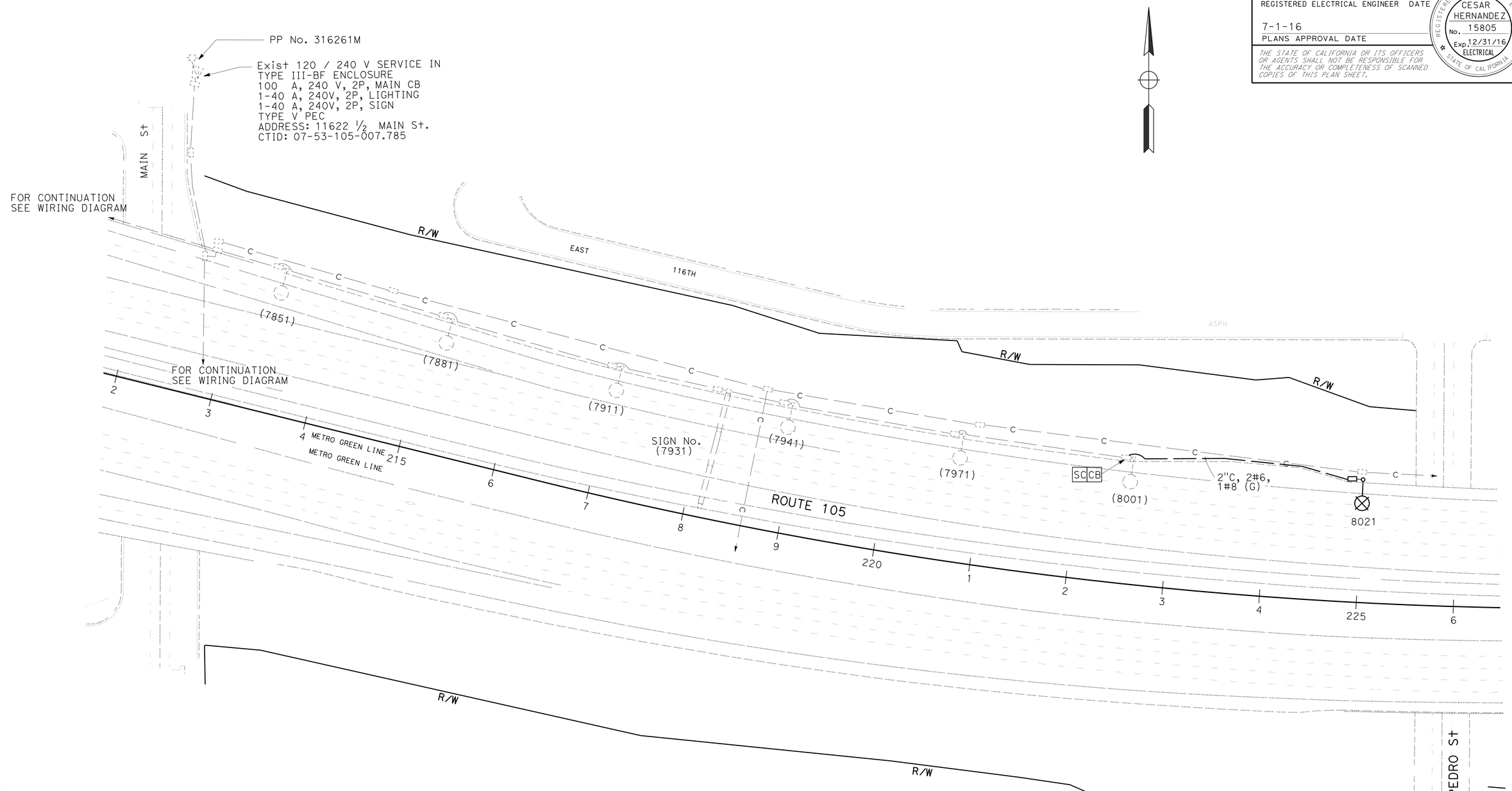

LIGHTING SYSTEM

SCALE 1"=50'

APPROVED FOR ELECTRICAL WORK ONLY

E-5

STATE OF CALIFORNIA - DEPARTMENT OF TRANSPORTATION
Caltrans® **TRAFFIC DESIGN**

FUNCTIONAL SUPERVISOR: FATEMEH ANSARI
CALCULATED-DESIGNED BY: X. NARANJO
CHECKED BY: CESAR HERNANDEZ
REVISED BY
DATE REVISED

LAST REVISION 00-00-00
DATE PLOTTED => 30-AUG-2016
TIME PLOTTED => 12:24

Dist	COUNTY	ROUTE	POST MILES TOTAL PROJECT	SHEET No.	TOTAL SHEETS
07	LA	105,110	6.6/8.0 13.2/14.7	44	93

REGISTERED ELECTRICAL ENGINEER 6/21/16 DATE

7-1-16
PLANS APPROVAL DATE

REGISTERED PROFESSIONAL ENGINEER
CESAR HERNANDEZ
No. 15805
Exp. 12/31/16
ELECTRICAL
STATE OF CALIFORNIA

THE STATE OF CALIFORNIA OR ITS OFFICERS OR AGENTS SHALL NOT BE RESPONSIBLE FOR THE ACCURACY OR COMPLETENESS OF SCANNED COPIES OF THIS PLAN SHEET.

NOTES: (THIS SHEET)

1. FOR ACCURATE RIGHT OF WAY DATA, CONTACT RIGHT OF WAY ENGINEERING AT THE DISTRICT OFFICE.
2. SEE ELECTRICAL DETAIL PLANS.

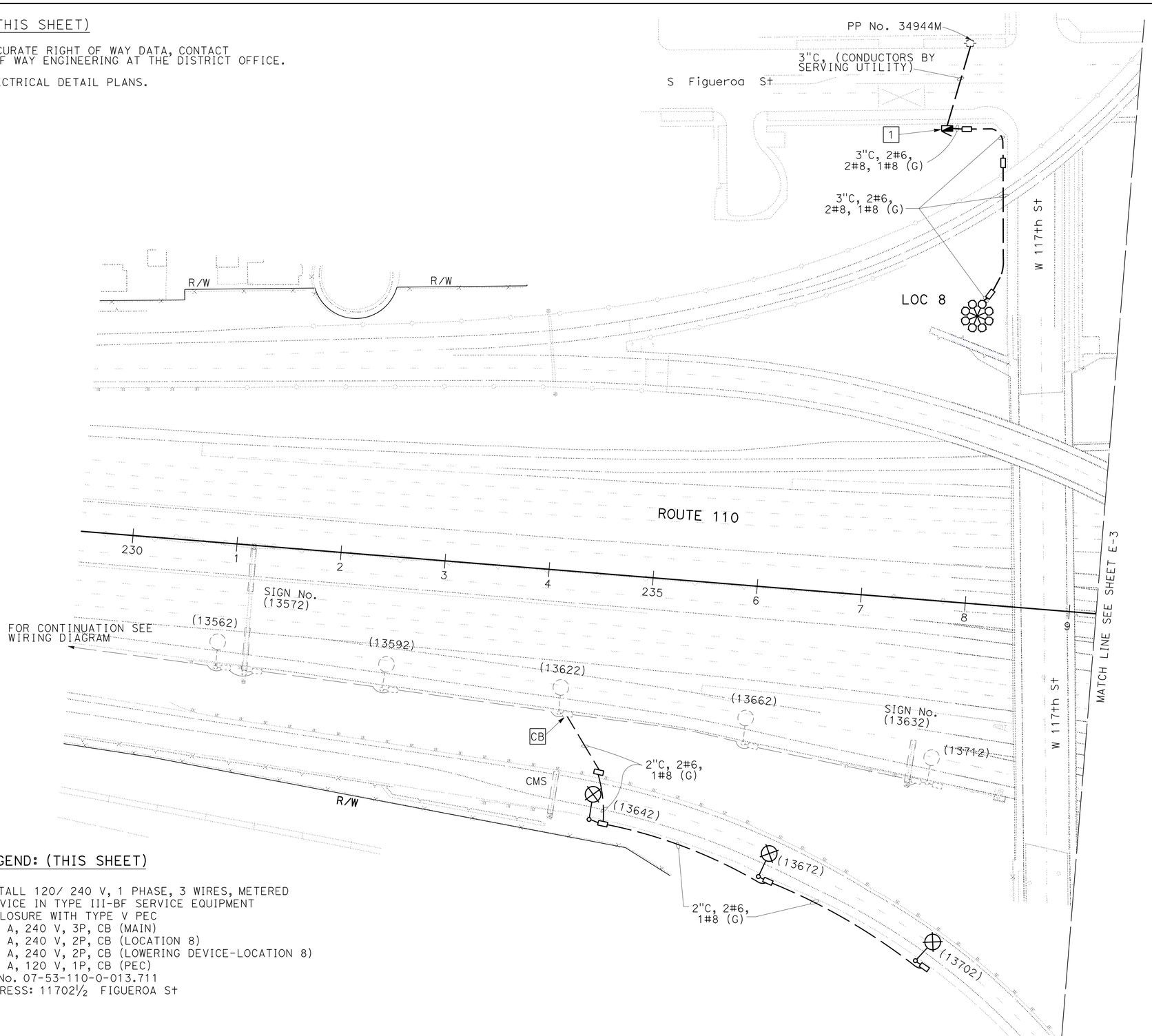

HIGH MAST POLE	HEIGHT (ft)
LOC 8	120

LEGEND: (THIS SHEET)

1 INSTALL 120/ 240 V, 1 PHASE, 3 WIRES, METERED SERVICE IN TYPE III-BF SERVICE EQUIPMENT ENCLOSURE WITH TYPE V PEC
200 A, 240 V, 3P, CB (MAIN)
30 A, 240 V, 2P, CB (LOCATION 8)
20 A, 240 V, 2P, CB (LOWERING DEVICE-LOCATION 8)
15 A, 120 V, 1P, CB (PEC)
ID No. 07-53-110-0-013.711
ADDRESS: 11702½ FIGUEROA St

APPROVED FOR ELECTRICAL WORK ONLY

LIGHTING SYSTEM

SCALE 1"=50'

E-6

STATE OF CALIFORNIA - DEPARTMENT OF TRANSPORTATION
Caltrans® **TRAFFIC DESIGN**

FUNCTIONAL SUPERVISOR: FATEMEH ANSARI
CALCULATED-DESIGNED BY: X. NARANJO
CHECKED BY: CESAR HERNANDEZ
REVISED BY
DATE REVISED

LAST REVISION 00-00-00
DATE PLOTTED => 30-AUG-2016
TIME PLOTTED => 12:24

Dist	COUNTY	ROUTE	POST MILES TOTAL PROJECT	SHEET No.	TOTAL SHEETS
07	LA	105,110	R6.6/R8.0 13.2/14.7	45	93

REGISTERED ELECTRICAL ENGINEER 6/21/16 DATE

7-1-16
PLANS APPROVAL DATE

REGISTERED PROFESSIONAL ENGINEER CESAR HERNANDEZ No. 15805 Exp. 12/31/16 ELECTRICAL STATE OF CALIFORNIA

THE STATE OF CALIFORNIA OR ITS OFFICERS OR AGENTS SHALL NOT BE RESPONSIBLE FOR THE ACCURACY OR COMPLETENESS OF SCANNED COPIES OF THIS PLAN SHEET.

NOTES: (THIS SHEET)

1. FOR ACCURATE RIGHT OF WAY DATA, CONTACT RIGHT OF WAY ENGINEERING AT THE DISTRICT OFFICE.
2. SEE WIRING DIAGRAM PLANS.

LEGEND:

[1] 2"C, 2#6, 1#8 G.

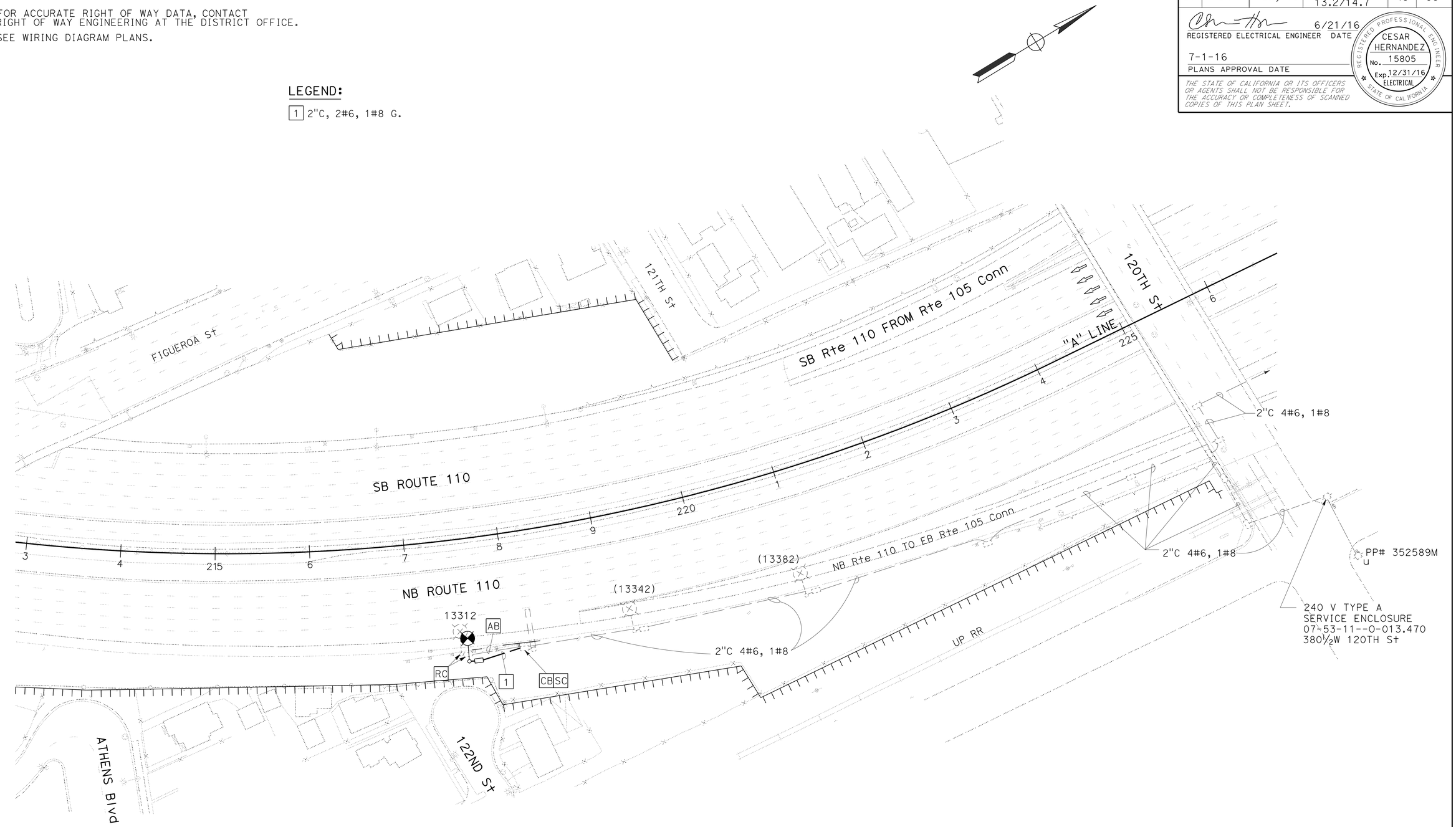

LIGHTING SYSTEM

SCALE 1"=50'

APPROVED FOR ELECTRICAL WORK ONLY

E-7

STATE OF CALIFORNIA - DEPARTMENT OF TRANSPORTATION
Caltrans® TRAFFIC DESIGN

FUNCTIONAL SUPERVISOR: FATEMEH ANSARI
CALCULATED-DESIGNED BY: X. NARANJO
CHECKED BY: CESAR HERNANDEZ
REVISED BY
DATE REVISED

LAST REVISION 00-00-00
DATE PLOTTED => 30-AUG-2016
TIME PLOTTED => 12:24

Dist	COUNTY	ROUTE	POST MILES TOTAL PROJECT	SHEET No.	TOTAL SHEETS
07	LA	105,110	R6.6/R8.0 13.2/14.7	46	93

REGISTERED ELECTRICAL ENGINEER 6/21/16 DATE

7-1-16
PLANS APPROVAL DATE

REGISTERED PROFESSIONAL ENGINEER CESAR HERNANDEZ No. 15805 Exp. 12/31/16 ELECTRICAL STATE OF CALIFORNIA

THE STATE OF CALIFORNIA OR ITS OFFICERS OR AGENTS SHALL NOT BE RESPONSIBLE FOR THE ACCURACY OR COMPLETENESS OF SCANNED COPIES OF THIS PLAN SHEET.

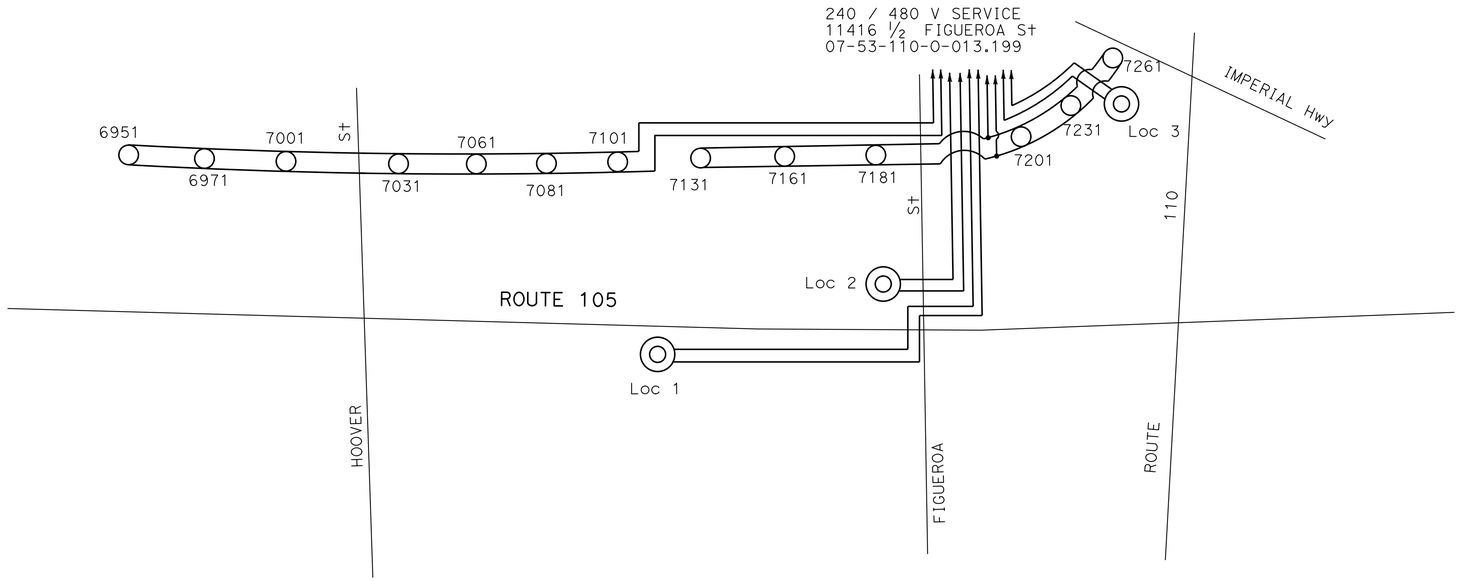

LEGEND:

- EXISTING CONDUCTOR TO REMAIN
- REMOVE CONDUCTOR
- NEW CONDUCTOR. SEE PLAN SHEET FOR WIRE SIZE.
- EXISTING LUMINAIRE LAMP TO REMAIN
- EXISTING SIGN LAMP TO REMAIN
- NEW 235 W LED LAMP
- REMOVE LUMINAIRE LAMP
- SPLICE CONDUCTORS
- NEW 8 - 500 W LED LAMPS

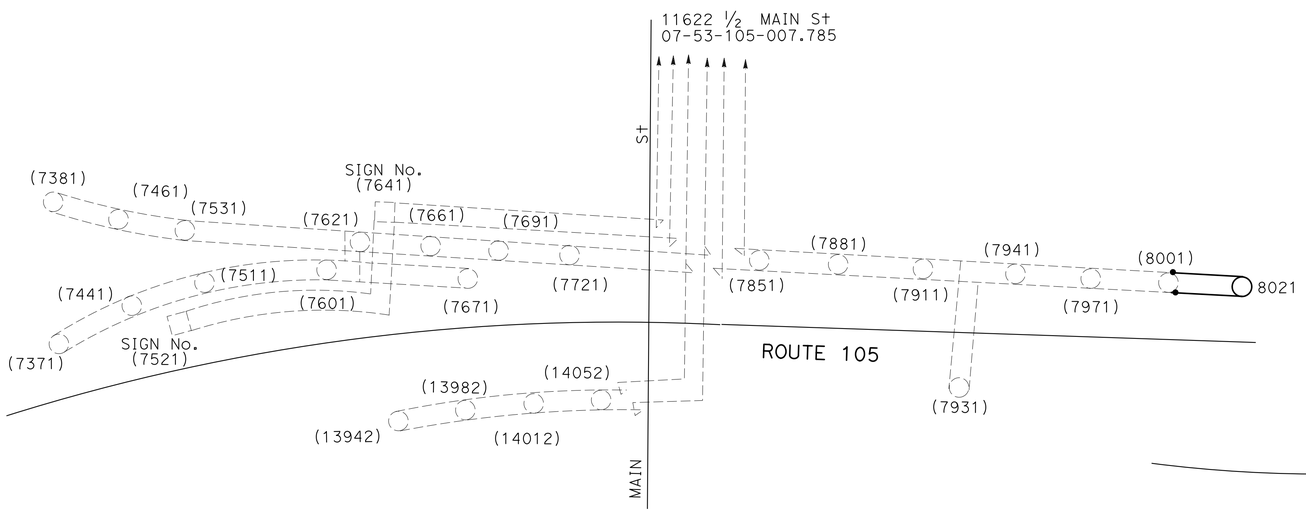

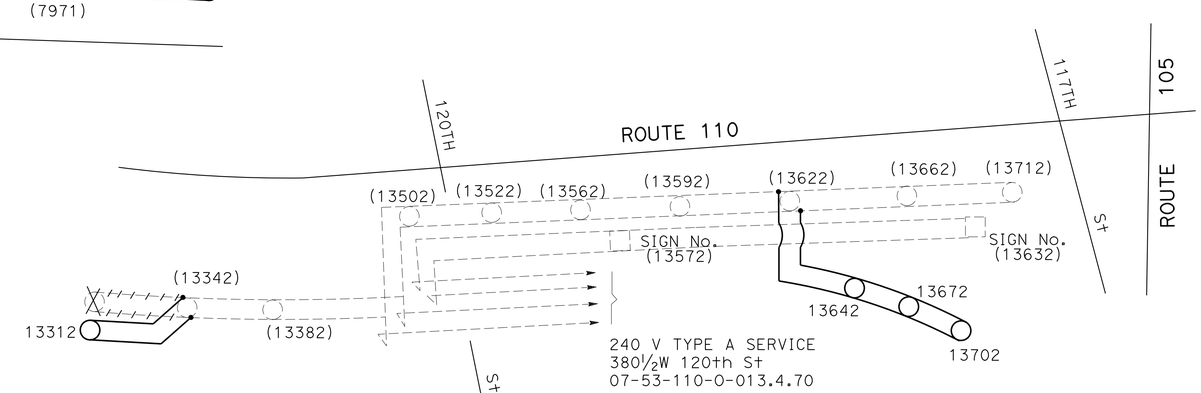

LIGHTING SYSTEM

SCALE 1"=50'

E-8

STATE OF CALIFORNIA - DEPARTMENT OF TRANSPORTATION
Caltrans® **TRAFFIC DESIGN**

FUNCTIONAL SUPERVISOR: FATEMEH ANSARI
CALCULATED-DESIGNED BY: X. NARANJO
CHECKED BY: CESAR HERNANDEZ
REVISED BY
DATE REVISED

LAST REVISION 00-00-00
DATE PLOTTED => 30-AUG-2016
TIME PLOTTED => 12:24

Dist	COUNTY	ROUTE	POST MILES TOTAL PROJECT	SHEET No.	TOTAL SHEETS
07	LA	105,110	R6.6/R8.0 13.2/14.7	47	93

REGISTERED ELECTRICAL ENGINEER 6/21/16 DATE

7-1-16
PLANS APPROVAL DATE

REGISTERED PROFESSIONAL ENGINEER
CESAR HERNANDEZ
No. 15805
Exp. 12/31/16
ELECTRICAL
STATE OF CALIFORNIA

THE STATE OF CALIFORNIA OR ITS OFFICERS OR AGENTS SHALL NOT BE RESPONSIBLE FOR THE ACCURACY OR COMPLETENESS OF SCANNED COPIES OF THIS PLAN SHEET.

NOTE: (THIS SHEET)

1. SEE SHEET E-8 FOR LEGEND.

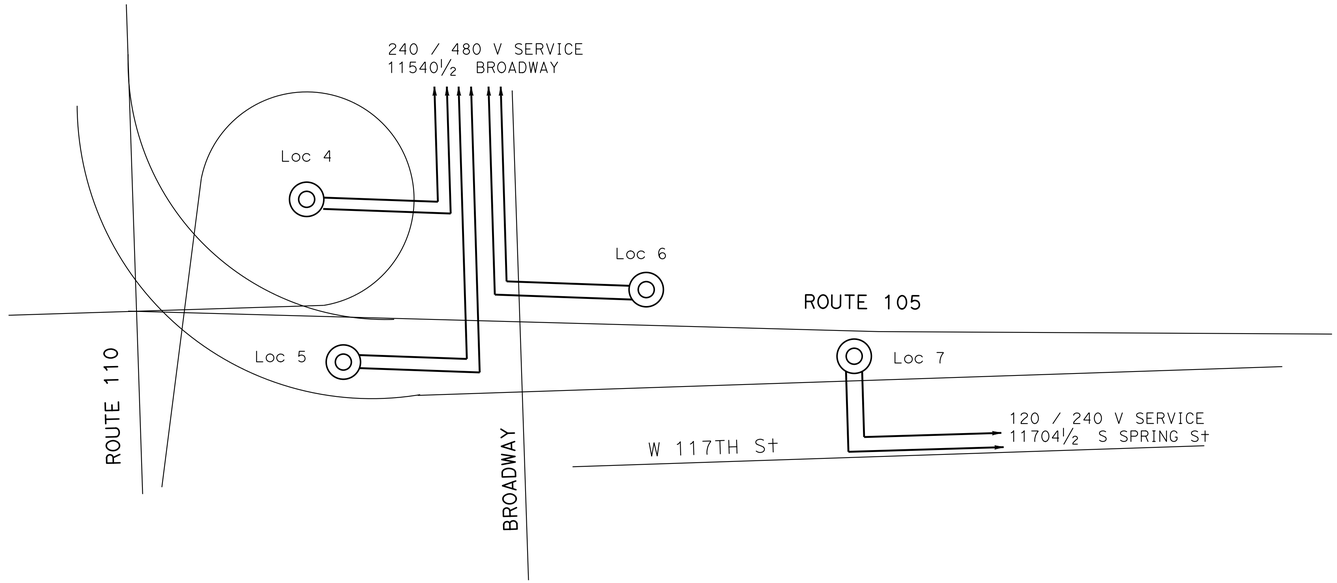

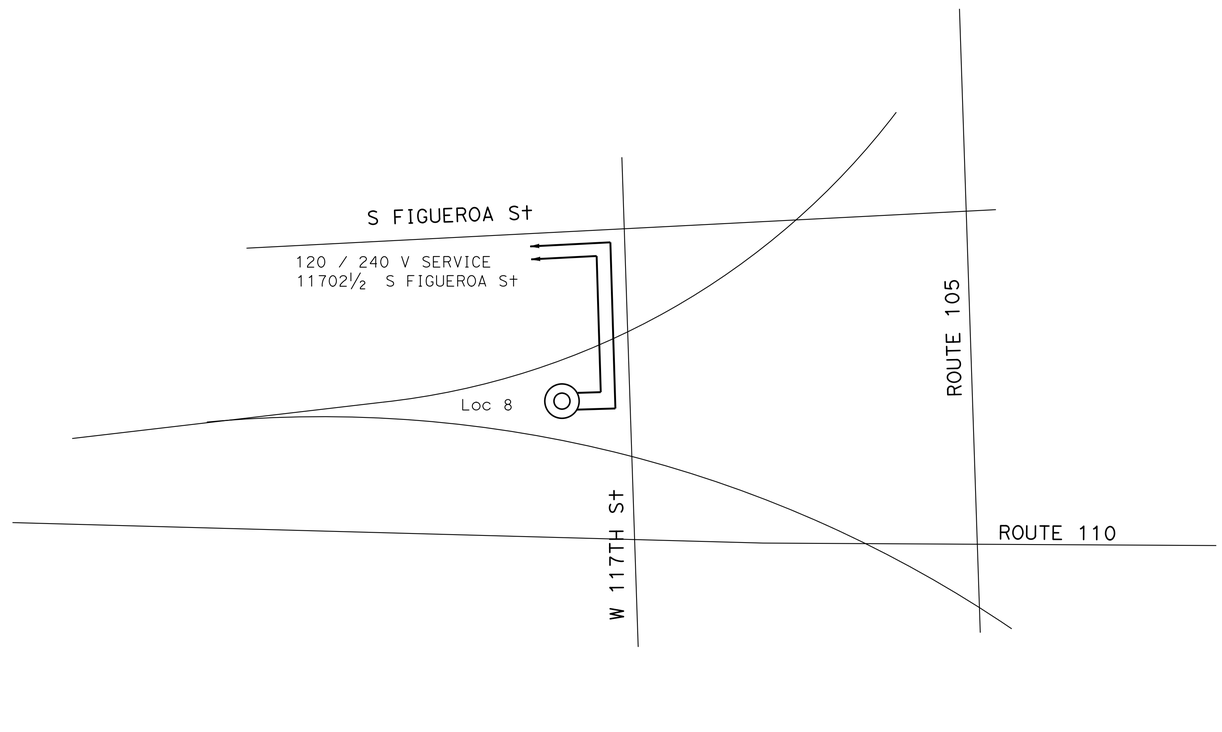

LIGHTING SYSTEM

SCALE 1"=50'

E-9

STATE OF CALIFORNIA - DEPARTMENT OF TRANSPORTATION
Caltrans® TRAFFIC DESIGN

FUNCTIONAL SUPERVISOR: FATEMEH ANSARI
CALCULATED-DESIGNED BY: X. NARANJO
CHECKED BY: CESAR HERNANDEZ
REVISED BY
DATE REVISED

LAST REVISION 00-00-00
DATE PLOTTED => 30-AUG-2016
TIME PLOTTED => 12:24

Dist	COUNTY	ROUTE	POST MILES TOTAL PROJECT	SHEET No.	TOTAL SHEETS
07	LA	105,110	R6.6/R8.0 13.2/14.7	48	93

REGISTERED ELECTRICAL ENGINEER 6/21/16 DATE

7-1-16
PLANS APPROVAL DATE

REGISTERED PROFESSIONAL ENGINEER CESAR HERNANDEZ No. 15805 Exp. 12/31/16 ELECTRICAL STATE OF CALIFORNIA

THE STATE OF CALIFORNIA OR ITS OFFICERS OR AGENTS SHALL NOT BE RESPONSIBLE FOR THE ACCURACY OR COMPLETENESS OF SCANNED COPIES OF THIS PLAN SHEET.

HEADFRAME AND RING ASSEMBLY

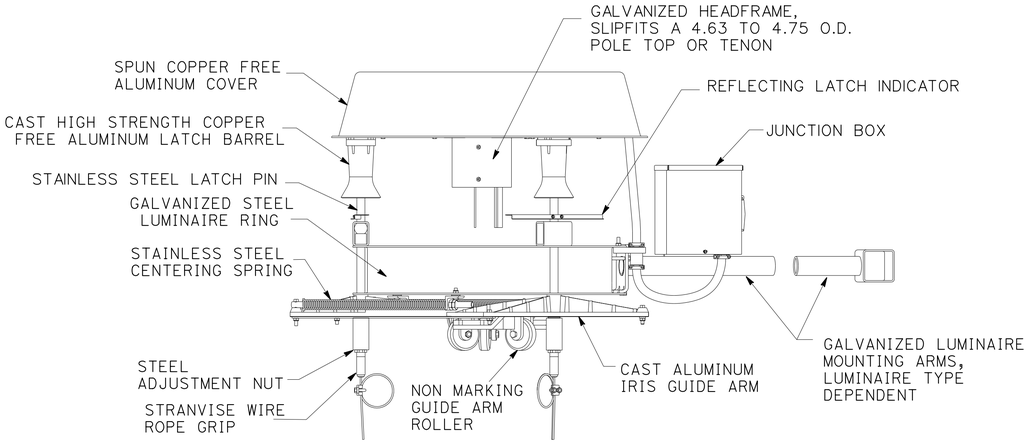

EPA = 5.62 SQUARE FEET
WEIGHT = 250 POUNDS
DIAMETER OF ASSEMBLY WITH LUMINAIRES VARIES FROM 8 TO 11 FEET

WINCH PLATE AND DRIVE MOTOR ASSEMBLY

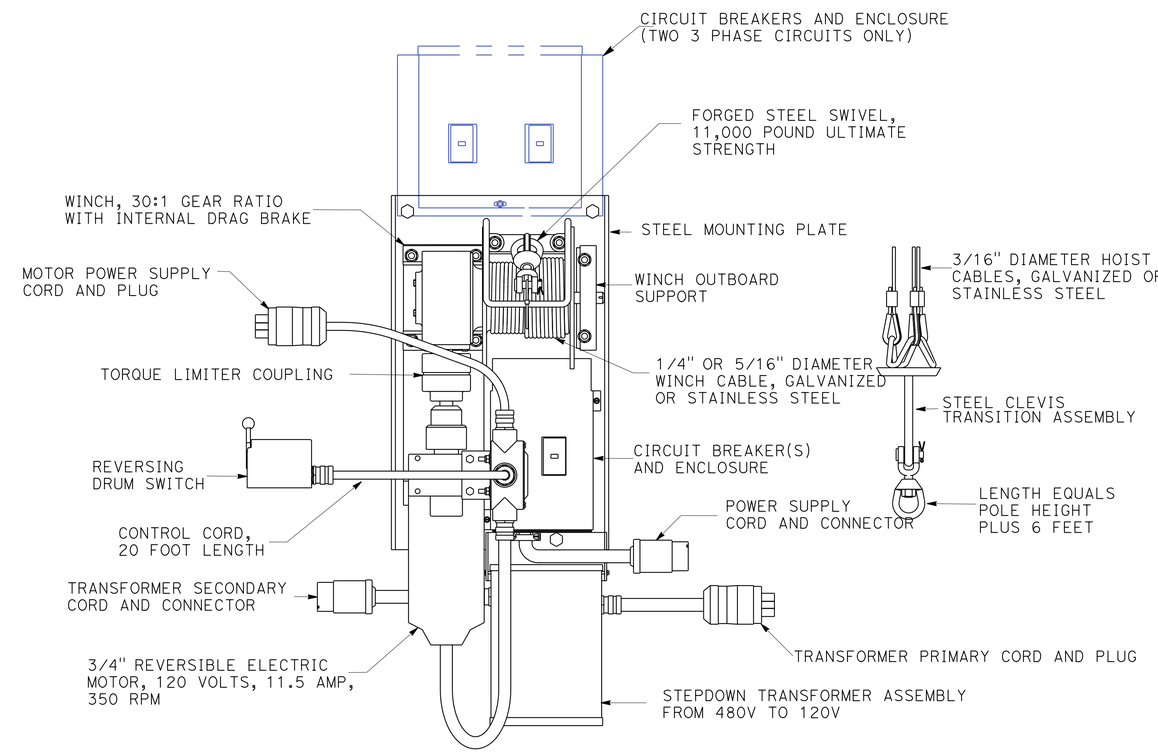

HEADFRAME AND RING ASSEMBLY

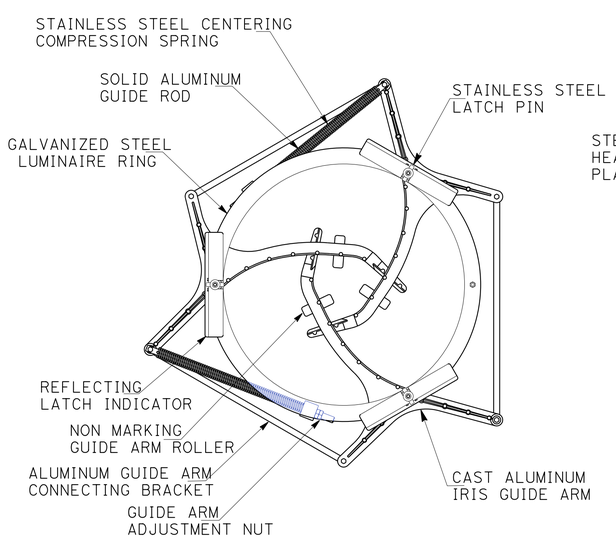

RING ASSEMBLY

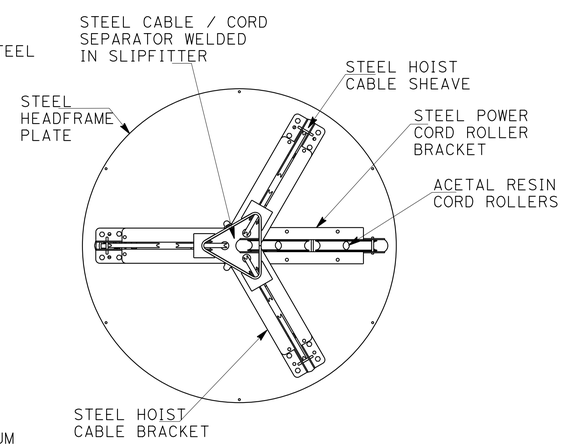

HEADFRAME ASSEMBLY

(LOWERING DEVICE DETAILS FOR LOCATIONS 1 TO 8)

ELECTRICAL DETAILS

NO SCALE

E-10

STATE OF CALIFORNIA - DEPARTMENT OF TRANSPORTATION
Caltrans® TRAFFIC DESIGN

FUNCTIONAL SUPERVISOR: FATEMEH ANSARI
CALCULATED-DESIGNED BY: X. NARANJO
CHECKED BY: CESAR HERNANDEZ
REVISED BY
DATE REVISED

LAST REVISION 00-00-00
DATE PLOTTED => 30-AUG-2016
TIME PLOTTED => 12:24

Dist	COUNTY	ROUTE	POST MILES TOTAL PROJECT	SHEET No.	TOTAL SHEETS
07	LA	105,110	R6.6/R8.0 13.2/14.7	49	93

REGISTERED ELECTRICAL ENGINEER 6/21/16 DATE

7-1-16
PLANS APPROVAL DATE

REGISTERED PROFESSIONAL ENGINEER CESAR HERNANDEZ No. 15805 Exp. 12/31/16 ELECTRICAL STATE OF CALIFORNIA

THE STATE OF CALIFORNIA OR ITS OFFICERS OR AGENTS SHALL NOT BE RESPONSIBLE FOR THE ACCURACY OR COMPLETENESS OF SCANNED COPIES OF THIS PLAN SHEET.

NOTE: (THIS SHEET)

1. ITEMS SHOWN ON TABLE ARE NOT SEPARATE BID ITEMS. THEY ARE FOR INFORMATION ONLY.

LIGHTING SYSTEM

SHEET No.	No. 5 PB	2"C TYPE 1	3"C TYPE 1	No. 4 CONDUCTOR	No. 6 CONDUCTOR	No. 8 CONDUCTOR	No. 8 CONDUCTOR (GROUND)	HIGH MAST POLE WITH FOUNDATION	500 W LED FOR HIGH MAST POLE	TYPE III-BF SERVICE EQUIPMENT ENCLOSURE	TYPE 30 ELECTROLIER WITH FOUNDATION	ROADWAY 2 LUMINAIRE LED	TYPE 31 ELECTROLIER WITH FOUNDATION
	EA	LF	LF	LF	LF	LF	LF	EA	EA	EA	EA	EA	EA
E-1	3	400	-	-	850	-	420	-	-	-	3	3	-
E-2	15	1400	1100	2200	3000	200	2600	2	16	-	7	7	-
E-3	11	300	750	750	3560	1760	1100	1	8	1	4	4	-
E-4	16	-	1500	3200	1600	4100	1820	4	32	2	-	-	-
E-5	1	185	-	-	380	-	200	-	-	-	1	1	-
E-6	7	450	300	-	1700	420	780	1	8	1	3	3	-
E-7	1	80	-	-	180	-	90	-	-	-	-	1	1

ELECTRICAL QUANTITIES

E-11

REVISED BY | DATE REVISED
X. NARANJO | CESAR HERNANDEZ
CALCULATED-DESIGNED BY | CHECKED BY
FUNCTIONAL SUPERVISOR
FATEMEH ANSARI

STATE OF CALIFORNIA - DEPARTMENT OF TRANSPORTATION
Caltrans TRAFFIC DESIGN

LAST REVISION 00-00-00 | DATE PLOTTED => 30-AUG-2016 TIME PLOTTED => 12:24

Pole Type	Pole Data			Base Plate Data					CIDH Pile Data	
	Height "H"	Min OD Base	Min Thickness Base	Dia	Thick-ness	Anchor Bolts			"D"	"L"
						Total	Size "d"	BOLT CIRCLE (BC)		
HM 100	100'-0"	1'-10"	3/8"	2'-8"	3"	12	1 1/2"	2'-2"	4'-0"	15'-0"
HM 120	120'-0"	2'-0"	1/2"	3'-2"	3"	12	2"	2'-8"	5'-0"	15'-0"
HM 160	160'-0"	2'-6"	5/8"	3'-6"	3"	12	2 1/2"	3'-0"	6'-0"	20'-0"

DIST	COUNTY	ROUTE	POST MILES TOTAL PROJECT	SHEET No.	TOTAL SHEETS
07	LA	105,110	R6.6/R8.0 13.2/14.7	50	93

REGISTERED CIVIL ENGINEER 01-25-16 DATE

7-1-16
PLANS APPROVAL DATE

REGISTERED PROFESSIONAL ENGINEER YU SONG No. C71687 Exp. 12/31/17 CIVIL STATE OF CALIFORNIA

The State of California or its officers or agents shall not be responsible for the accuracy or completeness of electronic copies of this plan sheet.

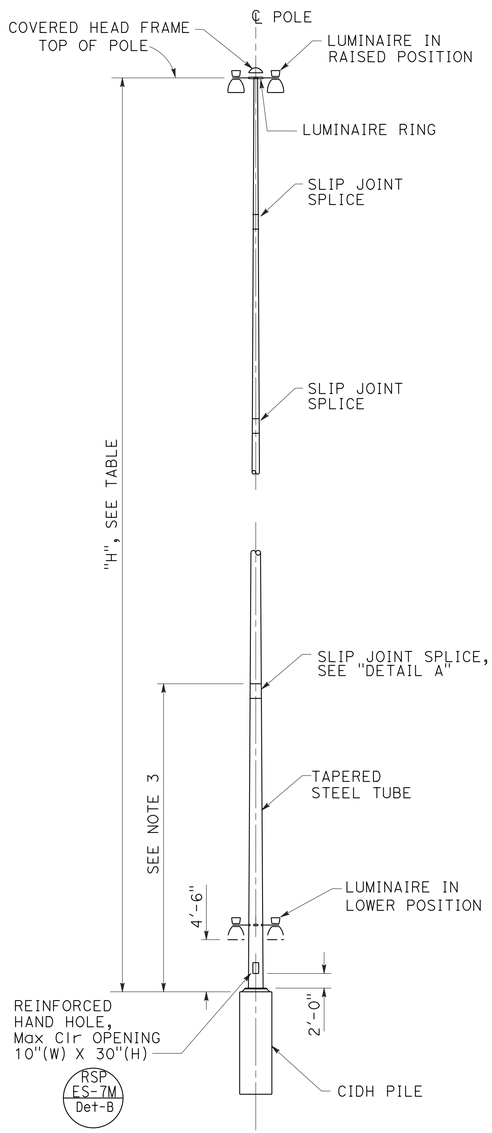

POLE

ELEVATION A

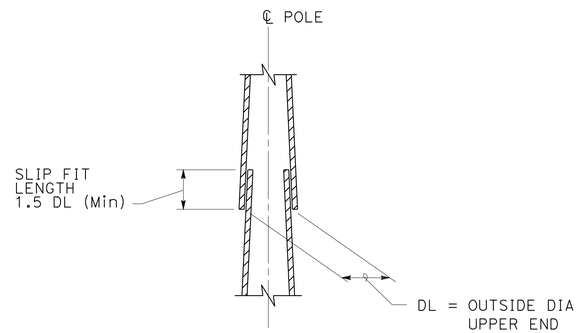

SLIP JOINT SPLICE DETAIL

DETAIL A

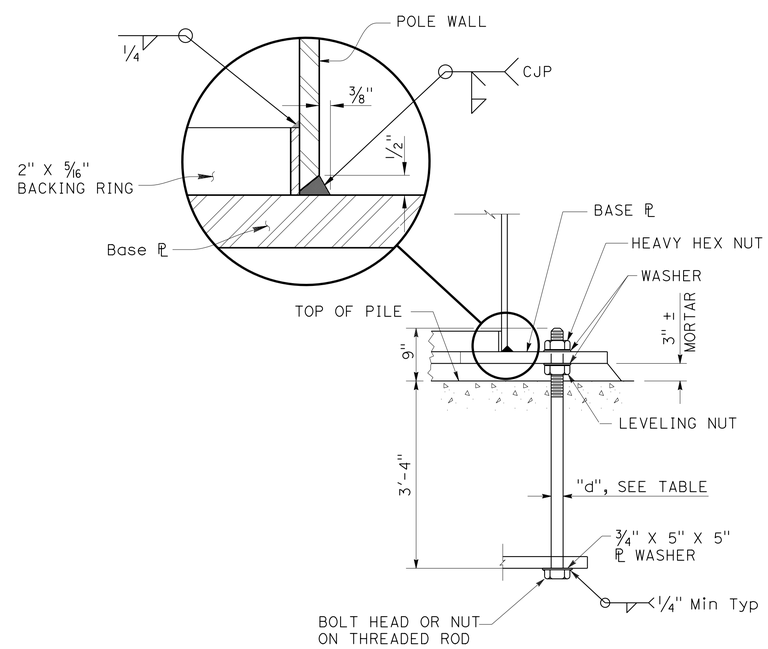

ANCHOR BOLT DETAIL

DETAIL B

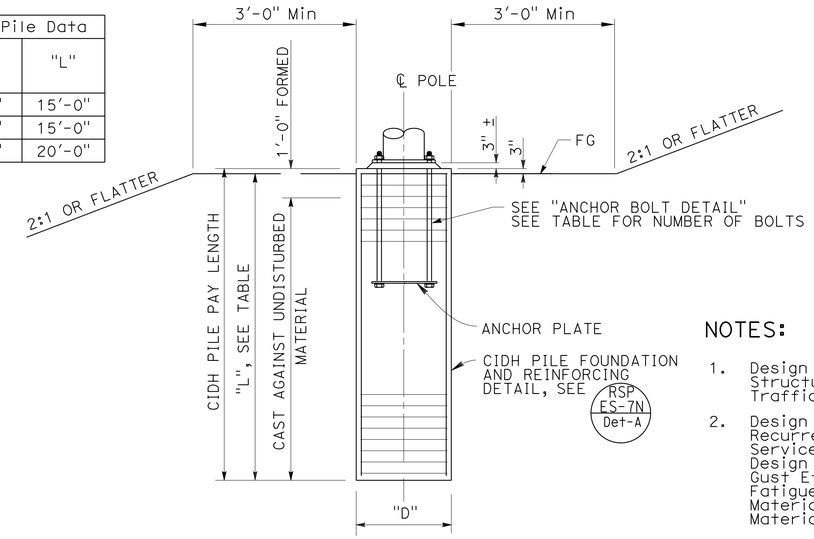

TYPICAL LOCATION

ELEVATION B

NOTES:

1. Design conforms to 2013 AASHTO Standard Specifications for Structural Supports for Highway Signs, Luminaires and Traffic Signals, 6th Edition.
2. Design Criteria:
   Recurrence Interval = 50 Years
   Service Life = 50 Years
   Design Wind Speed = 100 mph (3-second gust speed)
   Gust Effect Factor = 1.14
   Fatigue Importance Category = I
   Materials (Steel Poles and hand hole): 55,000 Psi yield strength
   Materials (Steel Anchor bolts): 55,000 Psi yield strength
3. Pole details must suit the luminaire lowering device and the foundation plan. Pole details must be submitted to the Engineer for approval.
4. Pole must be multi sided polygon or round and tapered at a rate of 0.14 inch per foot.
5. Total number of luminaires for each pole is up to eight(8). The weight of each luminaire must not exceed 52 pounds with maximum effective projected area of 1.3 square feet. The weight of luminaire lowering device must not exceed 750 pounds with maximum effective projected area of 5 square feet.
6. Base plate shape is optional.
7. Central hole in base plate must not exceed 12 inches or half of the base pole diameter, whichever is less.
8. For center void and drain holes in pole base mortar, see ES-6B Detail N.
9. Hand hole opening must be located on the downstream side of traffic unless otherwise determined by the Engineer.
10. The following soil parameters were used for the pole foundation design:
    ϕ = 34°
    γ = 120 pcf
    c = 0 psf

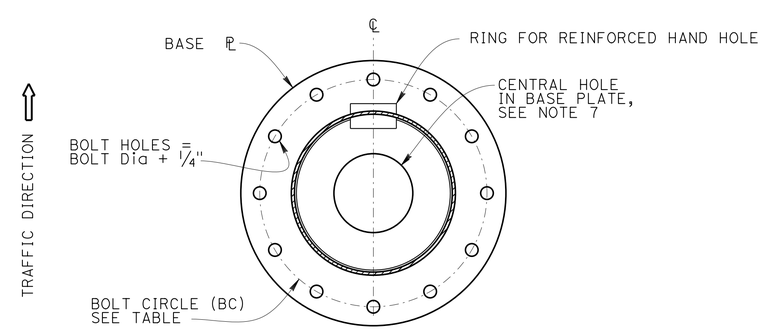

BASE PLATE DETAIL

DETAIL C

NO SCALE

THE CONTRACTOR SHALL VERIFY ALL CONTROLLING FIELD DIMENSIONS BEFORE ORDERING OR FABRICATING ANY MATERIAL.

BRANCH CHIEF	DAVID A. NEUMANN		
DESIGN	BY YU SONG	CHECKED NIRANJEN KANEPATHIPILLAI	
DETAILS	BY SHUMEI JIANG	CHECKED YU SONG	
QUANTITIES	BY X	CHECKED X	

STATE OF CALIFORNIA
DEPARTMENT OF TRANSPORTATION

DIVISION OF ENGINEERING SERVICES
STRUCTURE DESIGN
SPECIAL DESIGN BRANCH

BRIDGE No. N/A
POST MILE VARIES

100' TO 160' HIGH MAST LIGHT POLE
ELECTRICAL SYSTEMS

SES-1

STRUCTURES DESIGN SPECIAL DESIGN SHEET (ENGLISH) (REV. 09-01-10)

ORIGINAL SCALE IN INCHES FOR REDUCED PLANS 0 1 2 3

UNIT: 3619
PROJECT NUMBER & PHASE: 0713000149-1 CONTRACT NO.: 07-297404

DISREGARD PRINTS BEARING EARLIER REVISION DATES

REVISION DATES 12-08-15 1-20-16 4-06-16

SHEET 1 OF 1

FILE => 07-297401-u-sesdt01.dgn

USERNAME => s116095 DATE PLOTTED => 30-AUG-2016 TIME PLOTTED => 12:36

M

Maint	MAINTENANCE
Max	MAXIMUM
MB	METAL BEAM
MBB	METAL BEAM BARRIER
MBGR	METAL BEAM GUARD RAILING
Med	MEDIAN
MGS	MIDWEST GUARDRAIL SYSTEM
MH	MANHOLE
Min	MINIMUM
Misc	MISCELLANEOUS
Misc I & S	MISCELLANEOUS IRON AND STEEL
Mkr	MARKER
Mod	MODIFIED,
	MODIFY
Mon	MONUMENT
MP	METAL PLATE
MPGR	METAL PLATE GUARD RAILING
MR	MOVEMENT RATING
MSE	MECHANICALLY STABILIZED EMBANKMENT
Mt	MOUNTAIN, MOUNT
Mtl	MATERIAL
MVP	MAINTENANCE VEHICLE PULLOUT

N

N	NORTH
NB	NORTHBOUND
No.	NUMBER (MUST HAVE PERIOD)
Nos.	NUMBERS (MUST HAVE PERIOD)
NPS	NOMINAL PIPE SIZE
NS	NEAR SIDE
NSP	NEW STANDARD PLAN
NTS	NOT TO SCALE

O

Oblr	OBLITERATE
OC	OVERCROSSING
OD	OUTSIDE DIAMETER
OF	OUTSIDE FACE
OG	ORIGINAL GROUND
OGAC	OPEN GRADED ASPHALT CONCRETE
OGFC	OPEN GRADED FRICTION COURSE
OH	OVERHEAD
OHWM	ORDINARY HIGH WATER MARK
O-O	OUT TO OUT
Opp	OPPOSITE
OSD	OVERSIDE DRAIN

P

P	PAGE
PAP	PERFORATED ALUMINUM PIPE
PB	PULL BOX
PC	POINT OF CURVATURE,
	PRECAST
PCC	POINT OF COMPOUND CURVE,
	PORTLAND CEMENT CONCRETE
PCMS	PORTABLE CHANGEABLE MESSAGE SIGN
PCP	PERFORATED CONCRETE PIPE,
	PRESTRESSED CONCRETE PIPE
PCVC	POINT OF COMPOUND VERTICAL CURVE
PEC	PERMIT TO ENTER AND CONSTRUCT
Ped	PEDESTRIAN
Ped OC	PEDESTRIAN OVERCROSSING
Ped UC	PEDESTRIAN UNDERCROSSING
Perm Mtl	PERMEABLE MATERIAL

P continued

PG	PROFILE GRADE
PI	POINT OF INTERSECTION
PJP	PARTIAL JOINT PENETRATION
Pkwy	PARKWAY
ℙ,PL	PLATE
P/L	PROPERTY LINE
PM	POST MILE,
	TIME FROM NOON TO MIDNIGHT
PN	PAVING NOTCH
POC	POINT OF HORIZONTAL CURVE
POT	POINT OF TANGENT
POVC	POINT OF VERTICAL CURVE
PP	PIPE PILE,
	PLASTIC PIPE,
	POWER POLE
PPL	PREFORMED PERMEABLE LINER
PPP	PERFORATED PLASTIC PIPE
PRC	POINT OF REVERSE CURVE
PRF	PAVEMENT REINFORCING FABRIC
PRVC	POINT OF REVERSE VERTICAL CURVE
PS&E	PLANS, SPECIFICATIONS AND ESTIMATES
PS, P/S	PRESTRESSED
PSP	PERFORATED STEEL PIPE
PT	POINT OF TANGENCY
PVC	POLYVINYL CHLORIDE
Pvmt	PAVEMENT

Q

Qty	QUANTITY

R

R	RADIUS
R & D	REMOVE AND DISPOSE
R & S	REMOVE AND SALVAGE
R/C	RATE OF CHANGE
RCA	REINFORCED CONCRETE ARCH
RCB	REINFORCED CONCRETE BOX
RCP	REINFORCED CONCRETE PIPE
RCPA	REINFORCED CONCRETE PIPE ARCH
Rd	ROAD
Reinf	REINFORCED,
	REINFORCEMENT,
	REINFORCING
Rel	RELOCATE
Repl	REPLACEMENT
Ret	RETAINING
Rev	REVISED, REVISION
Rdwy	ROADWAY
RHMA	RUBBERIZED HOT MIX ASPHALT
Riv	RIVER
RM	ROAD-MIXED
RP	RADIUS POINT,
	REFERENCE POINT
RR	RAILROAD
RSP	ROCK SLOPE PROTECTION,
	REVISED STANDARD PLAN
Rt	RIGHT
Rte	ROUTE
RW	REDWOOD,
	RETAINING WALL
R/W	RIGHT OF WAY
Rwy	RAILWAY

S

S	SOUTH,
	SUPPLEMENT
SAE	STRUCTURE APPROACH EMBANKMENT
Salv	SALVAGE
SAPP	STRUCTURAL ALUMINUM PLATE PIPE
SB	SOUTHBOUND
SC	SAND CUSHION
SCSP	SLOTTED CORRUGATED STEEL PIPE
SD	STORM DRAIN
Sec	SECOND,
	SECTION
Sep	SEPARATION
SG	SUBGRADE
Shld	SHOULDER
Sht	SHEET
Sim	SIMILAR
℄	STATION LINE
SM	SELECTED MATERIAL
Spec	SPECIAL,
	SPECIFICATIONS
SPP	SLOTTED PLASTIC PIPE
SS	SLOPE STAKE
SSBM	STRAP AND SADDLE BRACKET METHOD
SSD	STRUCTURAL SECTION DRAIN
SSPA	STRUCTURAL STEEL PLATE ARCH
SSPP	STRUCTURAL STEEL PLATE PIPE
SSPPA	STRUCTURAL STEEL PLATE PIPE ARCH
SSRP	STEEL SPIRAL RIB PIPE
St	STREET
Sta	STATION
STBB	SINGLE THRIE BEAM BARRIER
Std	STANDARD
Str	STRUCTURE
Surf	SURFACING
SW	SIDEWALK,
	SOUND WALL
Swr	SEWER
Sym	SYMMETRICAL
S4S	SURFACE 4 SIDES

T

T	SEMI-TANGENT
Tan	TANGENT
TBB	THRIE BEAM BARRIER
Tbr	TIMBER
TC	TOP OF CURB
TCB	TRAFFIC CONTROL BOX
TCE	TEMPORARY CONSTRUCTION EASEMENT
Tel	TELEPHONE
Temp	TEMPORARY
TG	TOP OF GRADE
Tot	TOTAL
TP	TELEPHONE POLE
TPB	TREATED PERMEABLE BASE
TPM	TREATED PERMEABLE MATERIAL
Trans	TRANSITION

T continued

TS	TRANSVERSE,
	TRAFFIC SIGNAL,
	TUBULAR STEEL
Typ	TYPICAL

U

UC	UNDERCROSSING
UD	UNDERDRAIN
UG	UNDERGROUND
UON	UNLESS OTHERWISE NOTED
UP	UNDERPASS

V

V	VALVE,
	DESIGN SPEED
Var	VARIABLE,
	VARIES
VC	VERTICAL CURVE
VCP	VITRIFIED CLAY PIPE
Vert	VERTICAL
Via	VIADUCT
Vol	VOLUME

W

W	WEST,
	WIDTH
WB	WESTBOUND
WH	WEEP HOLE
WM	WIRE MESH
WS	WATER SURFACE
WSP	WELDED STEEL PIPE
Wt	WEIGHT
WV	WATER VALVE
WW	WINGWALL
WWLOL	WINGWALL LAYOUT LINE

X

X Sec	CROSS SECTION
Xing	CROSSING

Y

Yr	YEAR
Yrs	YEARS

Dist	COUNTY	ROUTE	POST MILES TOTAL PROJECT	SHEET No.	TOTAL SHEETS
07	LA	105,110	R6.6/R8.0 13.2/14.7	51	93

Grace M. Tsushima
REGISTERED CIVIL ENGINEER

July 19, 2013
PLANS APPROVAL DATE

REGISTERED PROFESSIONAL ENGINEER Grace M. Tsushima No. C49814 Exp. 9-30-14 CIVIL STATE OF CALIFORNIA

THE STATE OF CALIFORNIA OR ITS OFFICERS OR AGENTS SHALL NOT BE RESPONSIBLE FOR THE ACCURACY OR COMPLETENESS OF SCANNED COPIES OF THIS PLAN SHEET.

TO ACCOMPANY PLANS DATED 7-1-16

2010 REVISED STANDARD PLAN RSP A10B

UNIT OF MEASUREMENT SYMBOLS:

Some of the symbols used in the project plan quantity tables and in the Bid Item List are:

TABLE A

SYMBOL USED	DEFINITIONS
ACRE	ACRE
CF	CUBIC FOOT
CY	CUBIC YARD
EA	EACH
GAL	GALLON
LB	POUND
LF	LINEAR FOOT
SQFT	SQUARE FOOT
SQYD	SQUARE YARD
STA	100 FEET
TAB	TABLET
TON	2,000 POUNDS

Some of the symbols used in the plans other than in the project plan quantity tables are:

TABLE B

SYMBOL USED	DEFINITIONS
ksi	KIPS PER SQUARE INCH
ksf	KIPS PER SQUARE FOOT
psi	POUNDS PER SQUARE INCH
psf	POUNDS PER SQUARE FOOT
lb/ft^3, pcf	POUNDS PER CUBIC FOOT
tsf	TONS PER SQUARE FOOT
mph, MPH *	MILES PER HOUR
ø	NOMINAL DIAMETER
oz	OUNCE
lb	POUND
kip	1,000 POUNDS
cal	CALORIE
ft	FOOT OR FEET
gal	GALLON

* For use on a sign panel only

STATE OF CALIFORNIA
DEPARTMENT OF TRANSPORTATION

ABBREVIATIONS (SHEET 2 OF 2)

NO SCALE

RSP A10B DATED JULY 19, 2013 SUPERSEDES STANDARD PLAN A10B DATED MAY 20, 2011 - PAGE 2 OF THE STANDARD PLANS BOOK DATED 2010.

REVISED STANDARD PLAN RSP A10B

6-7-13

Dist	COUNTY	ROUTE	POST MILES TOTAL PROJECT	SHEET No.	TOTAL SHEETS
07	LA	105,110	R6.6/R8.0 13.2/14.7	52	93

Randell D. Hiatt
REGISTERED CIVIL ENGINEER

July 19, 2013
PLANS APPROVAL DATE

REGISTERED PROFESSIONAL ENGINEER
Randell D. Hiatt
No. C50200
Exp. 6-30-15
CIVIL
STATE OF CALIFORNIA

THE STATE OF CALIFORNIA OR ITS OFFICERS OR AGENTS SHALL NOT BE RESPONSIBLE FOR THE ACCURACY OR COMPLETENESS OF SCANNED COPIES OF THIS PLAN SHEET.

TO ACCOMPANY PLANS DATED 7-1-16

2010 REVISED STANDARD PLAN RSP A77L1

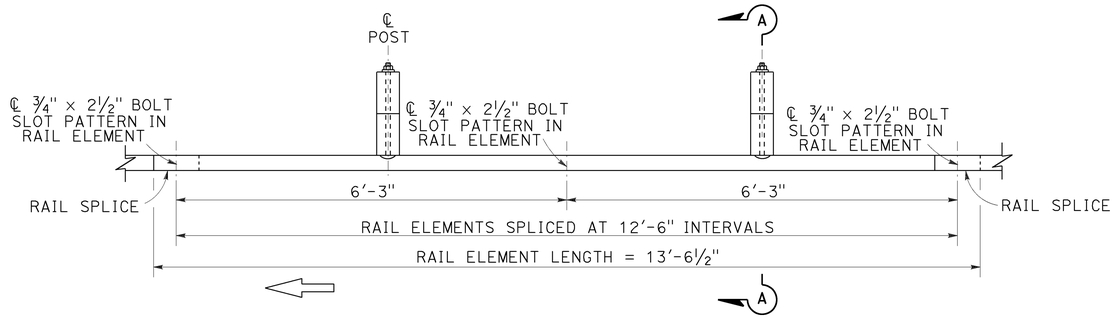

PLAN

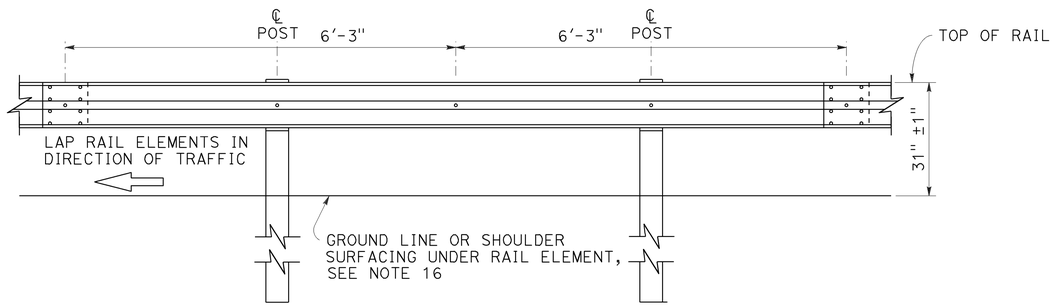

ELEVATION

MIDWEST GUARDRAIL SYSTEM WITH WOOD POST AND BLOCKS

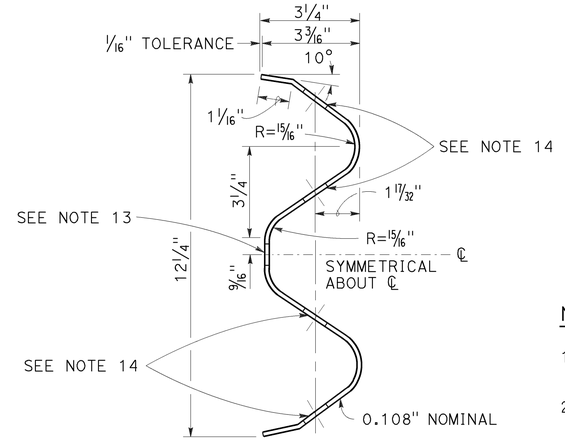

SECTION THRU RAIL ELEMENT

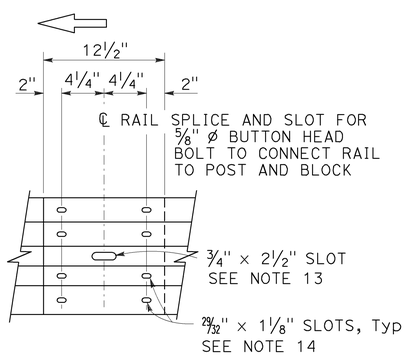

ELEVATION

RAIL ELEMENT SPLICE DETAIL

a) Connect the over lapped end of the rail elements with ⅝" ø × 1⅜" button head oval shoulder splice bolts inserted into the 29⁄32" × 1⅛" slots and bolted together with ⅝" ø recessed hex nuts. Recess of hex nut points toward rail element. A total of 8 bolts and nuts are to be used at each rail splice connection.

b) The ends of the rail elements are to be overlapped in the direction of traffic (see details).

c) Where end cap is to be attached to the end of a rail element, a total of 4 of the above described splice bolts and nuts are to be used.

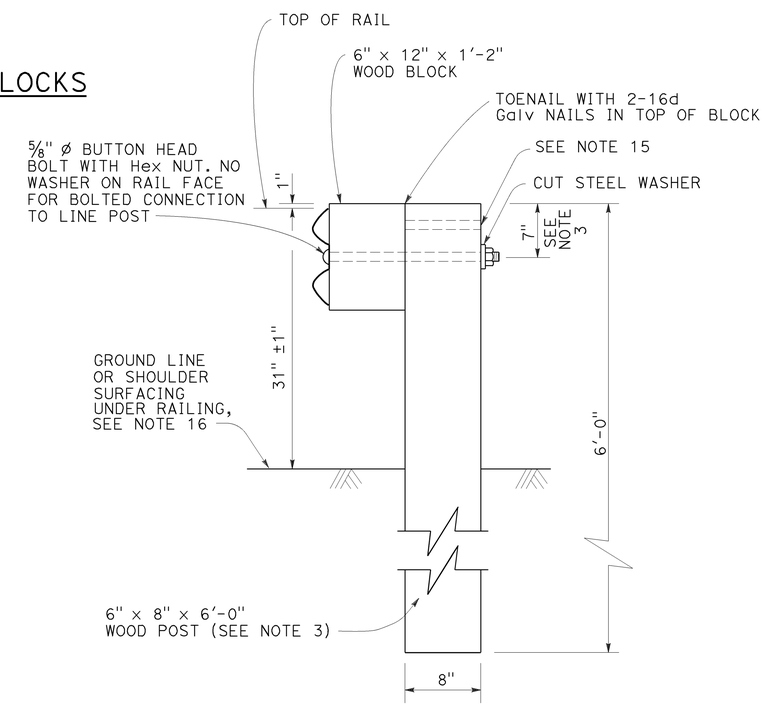

SECTION A-A

TYPICAL WOOD LINE POST INSTALLATION

See Note 4

NOTES:

1. For details of steel post installations, see Revised Standard Plan RSP A77L2.
2. For details of standard hardware used to construct MGS, see Revised Standard Plan RSP A77M1.
3. For details of wood posts and wood blocks used to construct MGS, see Revised Standard Plan RSP A77N1.
4. For additional installation details, see Revised Standard Plan RSP A77N3.
5. MGS post spacing to be 6'-3" center to center, except as otherwise noted.
6. For MGS typical layouts, see the A77P, A77Q and A77R Series of Standard Plans.
7. If railing is connected to terminal system end treatment, use 31" height terminal system end treatment.
8. For MGS end anchor details, see Revised Standard Plans RSP A77S1 and RSP A77T2.
9. For details of MGS transition to bridge railing, see Revised Standard Plan RSP A77U4.
10. For additional details of MSG connection to bridge railing, see Revised Standard Plans RSP A77U1, RSP A77U2 and RSP A77V1.
11. For MGS connection details to abutments and walls, see Revised Standard Plan RSP A77U3.
12. For typical MGS delineation and dike positioning details, see Revised Standard Plan RSP A77N4.
13. Slotted hole for bolted connection of rail element to block and post. See "Section Thru Rail Element".
14. Slotted holes for splice bolts to overlap ends of rail element. See "Section Thru Rail Element".
15. Additional hole in uppermost portion of line post is for potential future adjustments of railing height. See Revised Standard Plan RSP A77N1.
16. Install posts in soil.

STATE OF CALIFORNIA
DEPARTMENT OF TRANSPORTATION

MIDWEST GUARDRAIL SYSTEM STANDARD RAILING SECTION (WOOD POST WITH WOOD BLOCK)

NO SCALE

RSP A77L1 DATED JULY 19, 2013 SUPPLEMENTS STANDARD PLANS BOOK DATED 2010.

REVISED STANDARD PLAN RSP A77L1

Dist	COUNTY	ROUTE	POST MILES TOTAL PROJECT	SHEET No.	TOTAL SHEETS
07	LA	105,110	R6.6/R8.0 13.2/14.7	53	93

Randell D. Hiatt
REGISTERED CIVIL ENGINEER

July 19, 2013
PLANS APPROVAL DATE

REGISTERED PROFESSIONAL ENGINEER
Randell D. Hiatt
No. C50200
Exp. 6-30-15
CIVIL
STATE OF CALIFORNIA

THE STATE OF CALIFORNIA OR ITS OFFICERS OR AGENTS SHALL NOT BE RESPONSIBLE FOR THE ACCURACY OR COMPLETENESS OF SCANNED COPIES OF THIS PLAN SHEET.

TO ACCOMPANY PLANS DATED 7-1-16

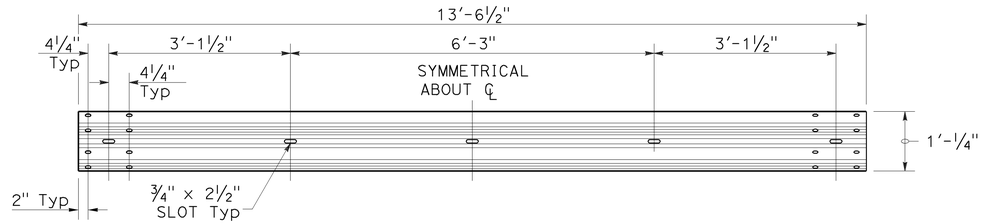

TYPICAL RAIL ELEMENT

NOTE:

1. Slotted holes for splice bolts to overlap ends of rail element.

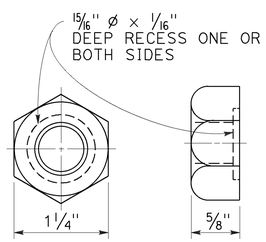

⅝" ø RECESS NUT

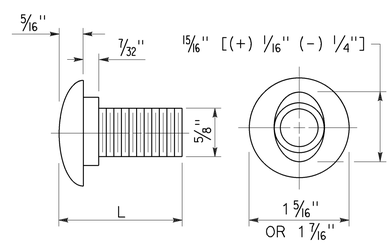

⅝" ø BUTTON HEAD BOLT

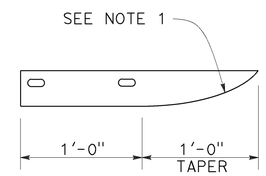

PLAN

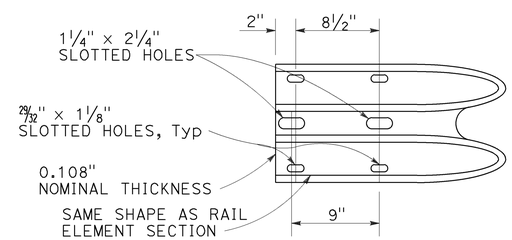

ELEVATION

END CAP
(TYPE A)

BUTTON HEAD BOLT

L	THREAD LENGTH
1⅜"	FULL THREAD LENGTH
2"	FULL THREAD LENGTH
10"	4" Min THREAD LENGTH
18"	4" Min THREAD LENGTH
20"	4" Min THREAD LENGTH
22"	4" Min THREAD LENGTH
26"	4" Min THREAD LENGTH
36"	4" Min THREAD LENGTH
** 2¾"	2" Min THREAD LENGTH
** 19"	4" Min THREAD LENGTH

** For nested rail applications.

STATE OF CALIFORNIA
DEPARTMENT OF TRANSPORTATION

MIDWEST GUARDRAIL SYSTEM STANDARD HARDWARE

NO SCALE

RSP A77M1 DATED JULY 19, 2013 SUPPLEMENTS THE STANDARD PLANS BOOK DATED 2010.

REVISED STANDARD PLAN RSP A77M1

2010 REVISED STANDARD PLAN RSP A77M1

7-3-13

Dist	COUNTY	ROUTE	POST MILES TOTAL PROJECT	SHEET No.	TOTAL SHEETS
07	LA	105,110	R6.6/R8.0 13.2/14.7	54	93

Randell D. Hiatt
REGISTERED CIVIL ENGINEER

July 19, 2013
PLANS APPROVAL DATE

REGISTERED PROFESSIONAL ENGINEER
Randell D. Hiatt
No. C50200
Exp. 6-30-15
CIVIL
STATE OF CALIFORNIA

THE STATE OF CALIFORNIA OR ITS OFFICERS OR AGENTS SHALL NOT BE RESPONSIBLE FOR THE ACCURACY OR COMPLETENESS OF SCANNED COPIES OF THIS PLAN SHEET.

TO ACCOMPANY PLANS DATED 7-1-16

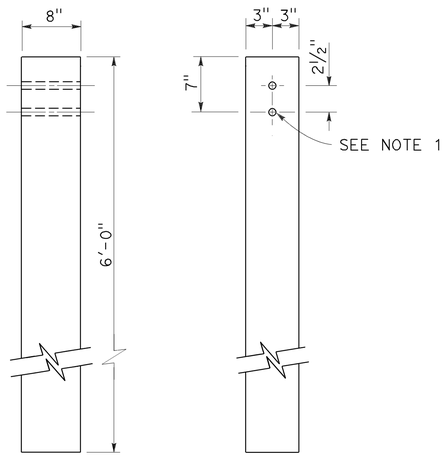

SIDE FRONT

6" x 8" WOOD POST
See Note 3

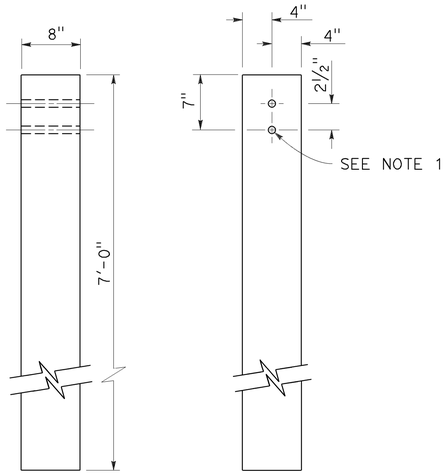

SIDE FRONT

8" x 8" WOOD POST
See Note 4

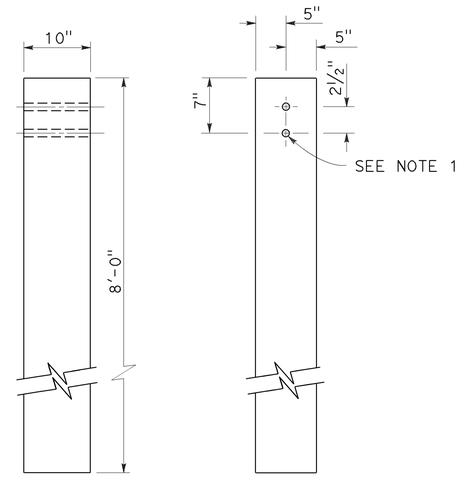

SIDE FRONT

10" x 10" WOOD POST
See Note 5

NOTES:

1. All holes in wood posts and blocks shall be ¾" Dia ± 1/16".
2. Dimensions shown for wood post are nominal.
3. This post and block combination used for standard line post sections of MGS.
4. This post and 8" x 12" block combination used for line post sections of MGS on narrow roadways.
5. This post and 8" x 12" block combination is typically used where strengthened line post sections of MGS are warranted to shield fixed objects.
6. See Revised Standard Plan RSP A77L3 for use of 6" x 8" and 8" x 8" wood blocks.

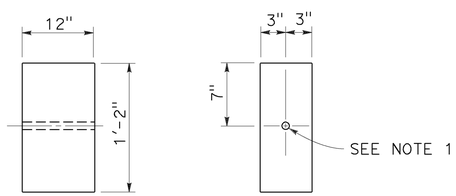

SIDE FRONT

6" x 12" WOOD BLOCK
See Note 3

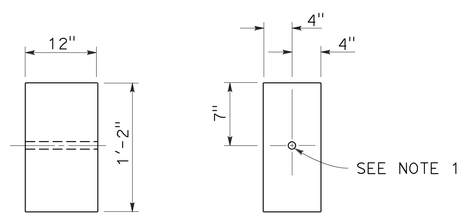

SIDE FRONT

8" x 12" WOOD BLOCK

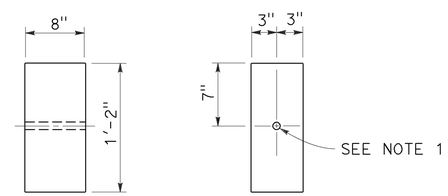

SIDE FRONT

6" x 8" WOOD BLOCK
Only for use with metal beam guard rail see Note 6

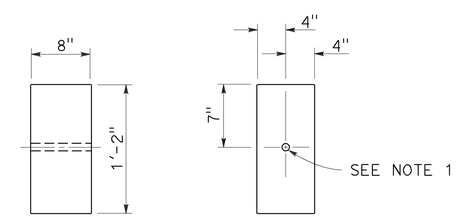

SIDE FRONT

8" x 8" WOOD BLOCK
Only for use with metal beam guard rail see Note 6

STATE OF CALIFORNIA
DEPARTMENT OF TRANSPORTATION

MIDWEST GUARDRAIL SYSTEM WOOD POST AND WOOD BLOCK DETAILS

NO SCALE

RSP A77N1 DATED JULY 19, 2013 SUPPLEMENTS THE STANDARD PLANS BOOK DATED 2010.

REVISED STANDARD PLAN RSP A77N1

2010 REVISED STANDARD PLAN RSP A77N1

7-3-13

Dist	COUNTY	ROUTE	POST MILES TOTAL PROJECT	SHEET No.	TOTAL SHEETS
07	LA	105,110	R6.6/R8.0 13.2/14.7	55	93

Randell D. Hiatt
REGISTERED CIVIL ENGINEER

November 15, 2013
PLANS APPROVAL DATE

REGISTERED PROFESSIONAL ENGINEER
Randell D. Hiatt
No. C50200
Exp. 6-30-15
CIVIL
STATE OF CALIFORNIA

THE STATE OF CALIFORNIA OR ITS OFFICERS OR AGENTS SHALL NOT BE RESPONSIBLE FOR THE ACCURACY OR COMPLETENESS OF SCANNED COPIES OF THIS PLAN SHEET.

TO ACCOMPANY PLANS DATED 7-1-16

2010 REVISED STANDARD PLAN RSP A77N3

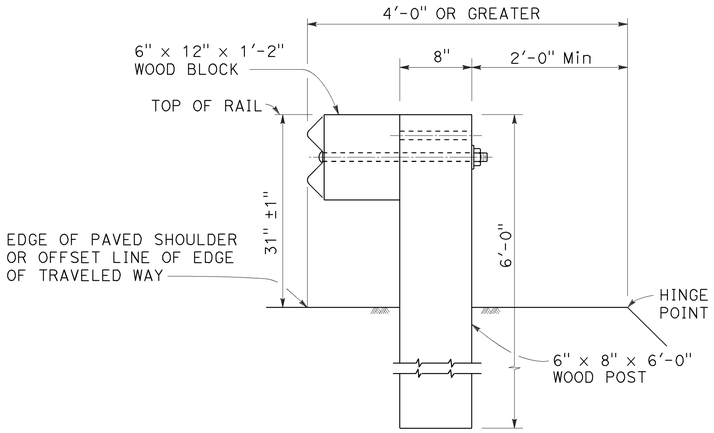

DETAIL A

TYPICAL ROADWAY INSTALLATION

See Note 1

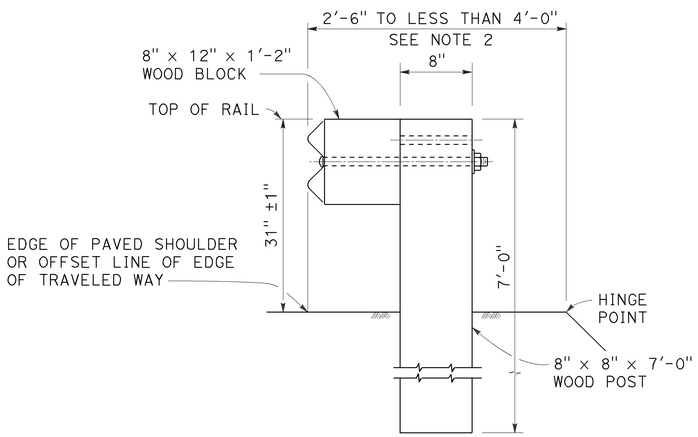

DETAIL B

NARROW ROADWAY INSTALLATION

See Note 1

POST EMBEDMENT

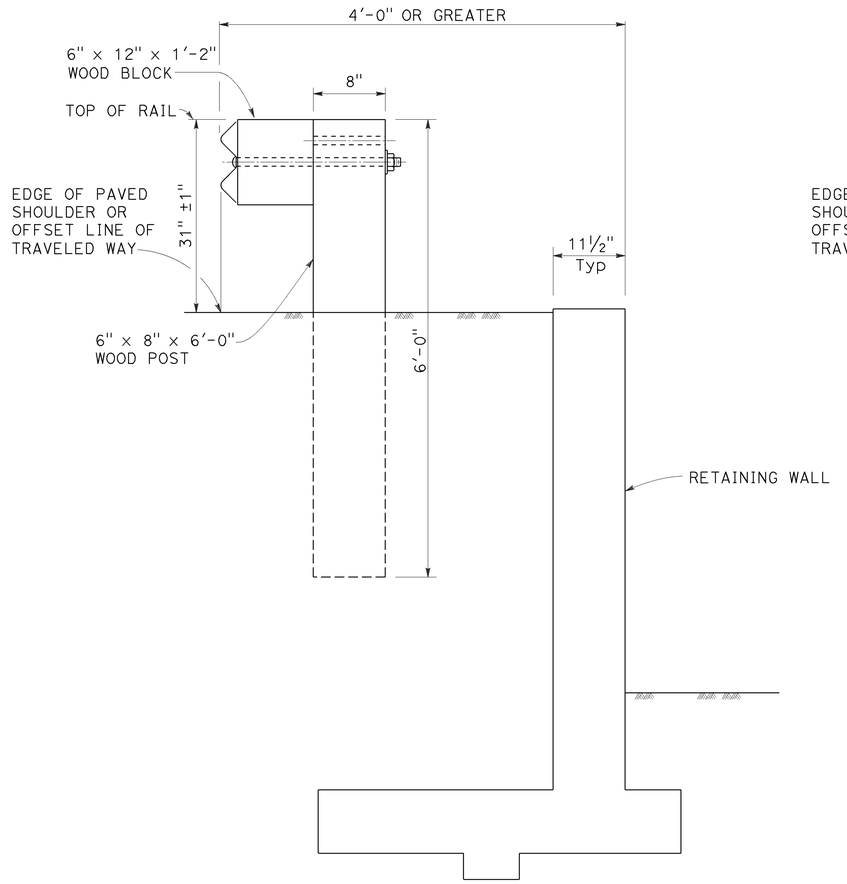

DETAIL C

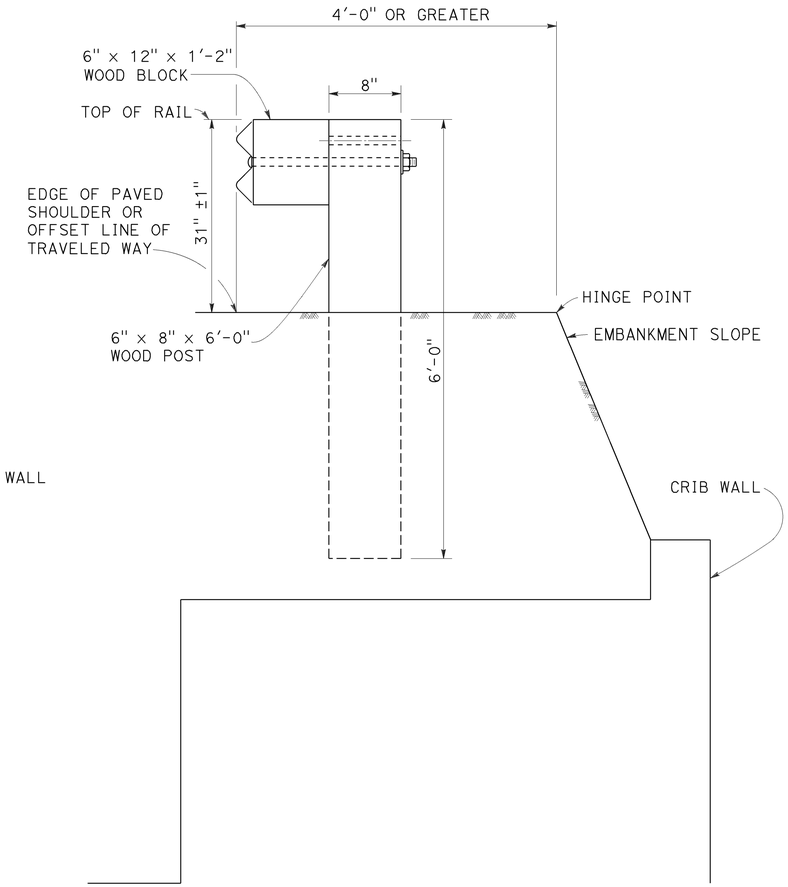

DETAIL D

INSTALLATION AT EARTH RETAINING WALLS

NOTES:

1. These installation details also applicable to steel line post installations. For Detail A, C, and D, where steel line post installations are constructed, W6 x 8.5 or W6 x 9 steel post, 6'-0" in length, with 6" x 12" x 1'-2" notched wood blocks or notched recycled plastic blocks are to be used in place of the size of wood post and wood block shown. For Detail B, where steel line post installations are constructed, W6 x 15 steel post, 8'-0" in length, with 8" x 12" x 1'-2" notched wood blocks or notched recycled plastic blocks are to be used in place of the size of wood post and wood block shown. For additional installation details, see Revised Standard Plan RSP A77L1 and RSP A77L2.
2. Where the distance between the face of the rail and the hinge point is less than 2'-6", see the Project Plans for special details.
3. For dike positioning with MGS installations, see Revised Standard Plan RSP A77N4.

STATE OF CALIFORNIA
DEPARTMENT OF TRANSPORTATION

MIDWEST GUARDRAIL SYSTEM TYPICAL LINE POST EMBEDMENT AND HINGE POINT OFFSET DETAILS

NO SCALE

RSP A77N3 DATED NOVEMBER 15, 2013 SUPERSEDES RSP A77N3
DATED JULY 19, 2013 THAT SUPPLEMENTS THE STANDARD PLANS BOOK DATED 2010.

REVISED STANDARD PLAN RSP A77N3

10-29-13

Dist	COUNTY	ROUTE	POST MILES TOTAL PROJECT	SHEET No.	TOTAL SHEETS
07	LA	105,110	R6.6/R8.0 13.2/14.7	56	93

Randell D. Hiatt
REGISTERED CIVIL ENGINEER

July 19, 2013
PLANS APPROVAL DATE

REGISTERED PROFESSIONAL ENGINEER
Randell D. Hiatt
No. C50200
Exp. 6-30-15
CIVIL
STATE OF CALIFORNIA

THE STATE OF CALIFORNIA OR ITS OFFICERS OR AGENTS SHALL NOT BE RESPONSIBLE FOR THE ACCURACY OR COMPLETENESS OF SCANNED COPIES OF THIS PLAN SHEET.

TO ACCOMPANY PLANS DATED 7-1-16

NOTES:

1. When necessary to place dike more than 7" in front of face of MGS, only Type C dike may be used. For dike details, see Revised Standard Plan RSP A87B.
2. For standard railing post embedment, see Revised Standard Plan RSP A77N3.
3. MGS delineation to be used where shown on the Project Plans.
4. When dike or curb is placed under MGS, the maximum height of the dike or curb shall be 6". Mountable dike should not be used. For dike and curb details, see Revised Standard Plans RSP A87A and RSP A87B.
5. For details of typical distance between the face of rail and hinge point, see Revised Standard Plan RSP A77N3.
6. For steel line posts, use 1/4 - 20 self-tapping screws in 0.22" diameter holes or 1/4" bolts in 9/32" diameter holes.

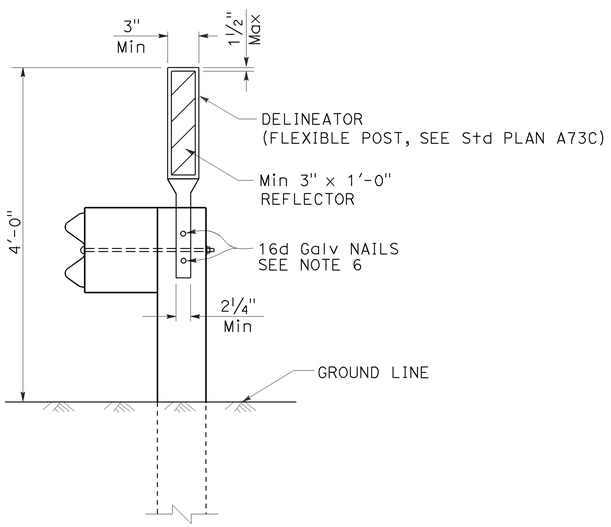

MGS DELINEATION

See Note 3

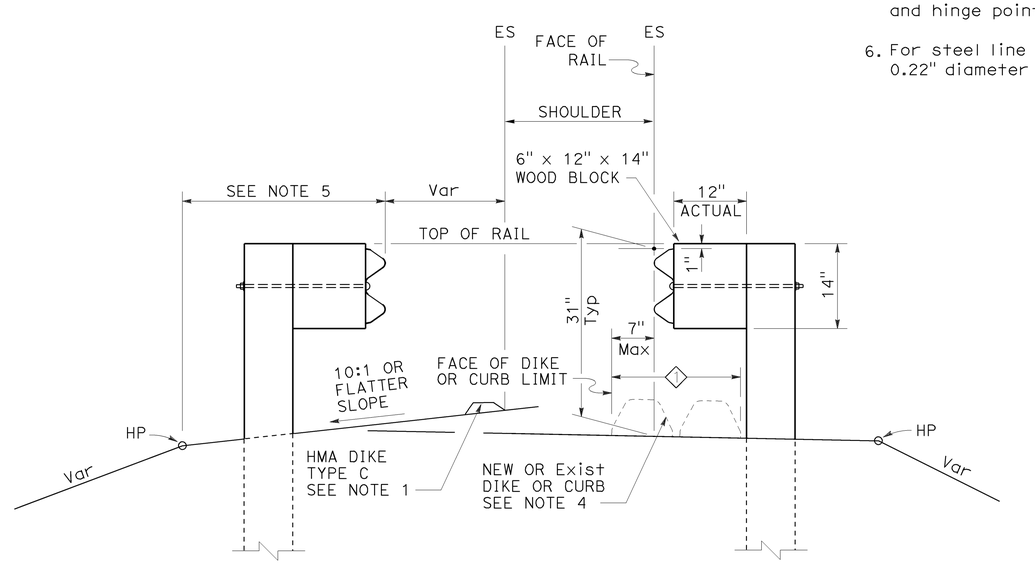

DIKE POSITIONING

See Note 1

1 PERMISSIBLE DIKE OR CURB PLACEMENT AREA

STATE OF CALIFORNIA
DEPARTMENT OF TRANSPORTATION

MIDWEST GUARDRAIL SYSTEM TYPICAL RAILING DELINEATION AND DIKE POSITIONING DETAILS

NO SCALE

RSP A77N4 DATED JULY 19, 2013 SUPPLEMENTS THE STANDARD PLANS BOOK DATED 2010.

REVISED STANDARD PLAN RSP A77N4

2010 REVISED STANDARD PLAN RSP A77N4

7-10-13

Dist	COUNTY	ROUTE	POST MILES TOTAL PROJECT	SHEET No.	TOTAL SHEETS
07	LA	105,110	R6.6/R8.0 13.2/14.7	57	93

Randell D. Hiatt
REGISTERED CIVIL ENGINEER

July 19, 2013
PLANS APPROVAL DATE

REGISTERED PROFESSIONAL ENGINEER
Randell D. Hiatt
No. C50200
Exp. 6-30-15
CIVIL
STATE OF CALIFORNIA

THE STATE OF CALIFORNIA OR ITS OFFICERS OR AGENTS SHALL NOT BE RESPONSIBLE FOR THE ACCURACY OR COMPLETENESS OF SCANNED COPIES OF THIS PLAN SHEET.

TO ACCOMPANY PLANS DATED 7-1-16

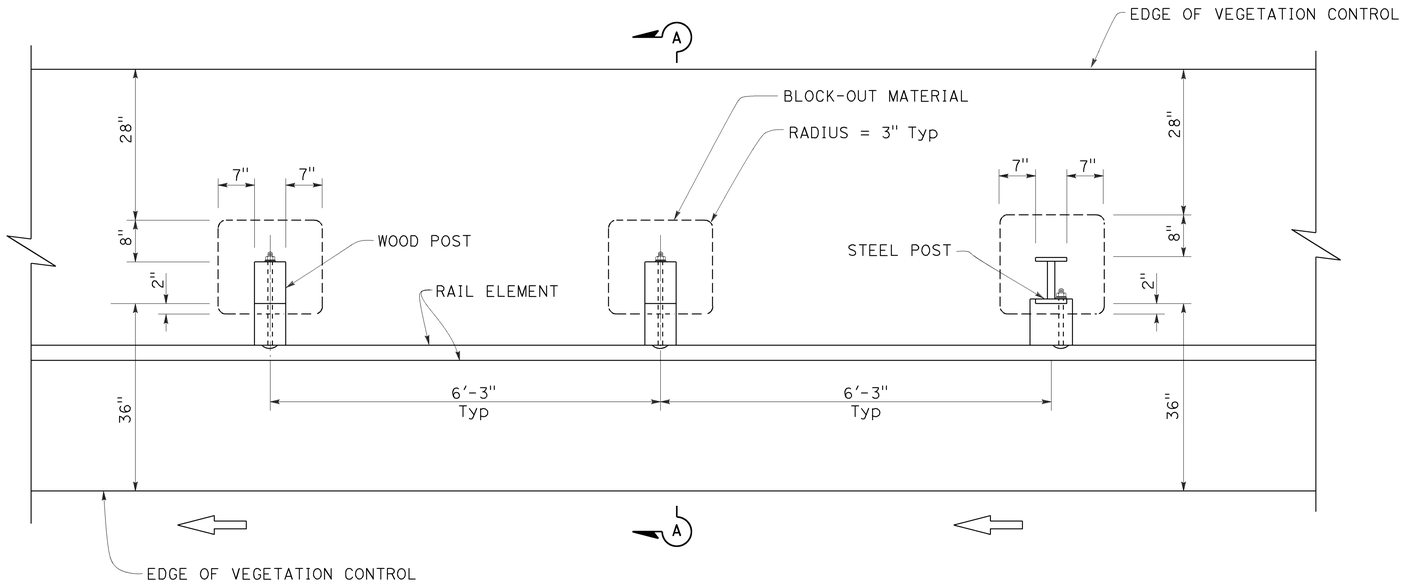

PLAN

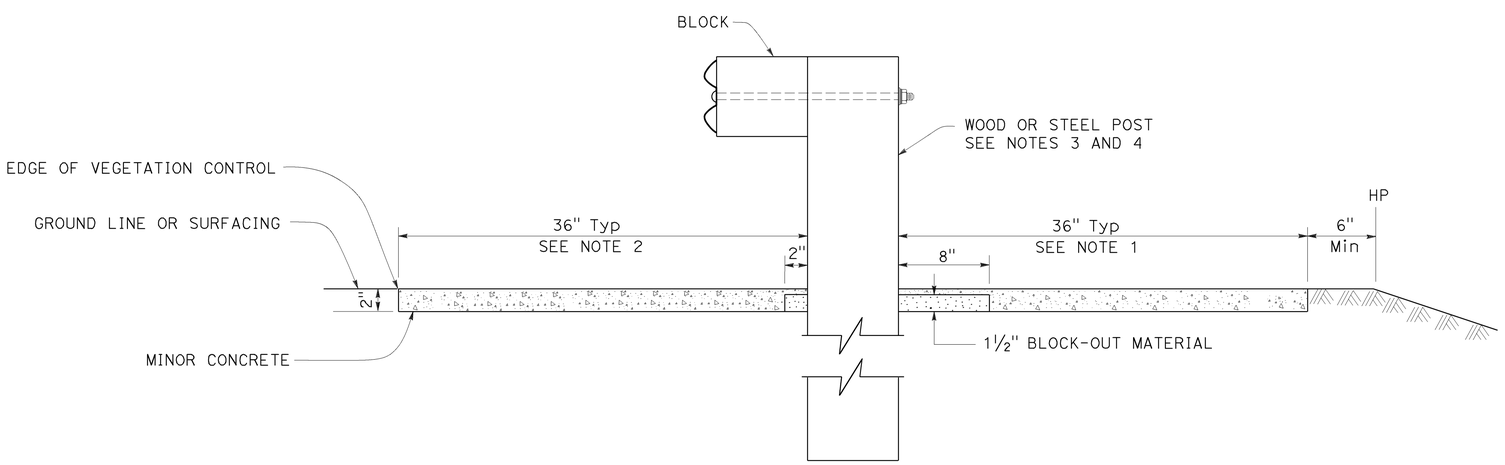

SECTION A-A

NOTES:

1. Where the distance between back of post and hinge point is less than 42", construct vegetation control to 6" from hinge point while maintaining the 8" block-out at back of post. If the 8" block-out at back of post can not be maintained, construct vegetation control flush with the back edge of post.
2. Where dike is constructed under railing, construct vegetation control to back edge of dike. Where paved shoulder is constructed within 36" in front of the post, construct vegetation control to the edge of paved shoulder.
3. For wood post sizes, see Revised Standard Plan RSP A77N1.
4. For steel post sizes, see Revised Standard Plan RSP A77N2.
5. For details not shown, see Revised Standard Plans RSP A77L1 and RSP A77L2.

STATE OF CALIFORNIA
DEPARTMENT OF TRANSPORTATION

MIDWEST GUARDRAIL SYSTEM TYPICAL VEGETATION CONTROL STANDARD RAILING SECTION

NO SCALE

RSP A77N5 DATED JULY 19, 2013 SUPPLEMENTS THE STANDARD PLANS BOOK DATED 2010.

REVISED STANDARD PLAN RSP A77N5

2010 REVISED STANDARD PLAN RSP A77N5

7-3-13

Dist	COUNTY	ROUTE	POST MILES TOTAL PROJECT	SHEET No.	TOTAL SHEETS
07	LA	105,110	R6.6/R8.0 13.2/14.7	58	93

Randell D. Hiatt
REGISTERED CIVIL ENGINEER

July 19, 2013
PLANS APPROVAL DATE

REGISTERED PROFESSIONAL ENGINEER
Randell D. Hiatt
No. C50200
Exp. 6-30-15
CIVIL
STATE OF CALIFORNIA

THE STATE OF CALIFORNIA OR ITS OFFICERS OR AGENTS SHALL NOT BE RESPONSIBLE FOR THE ACCURACY OR COMPLETENESS OF SCANNED COPIES OF THIS PLAN SHEET.

TO ACCOMPANY PLANS DATED 7-1-16

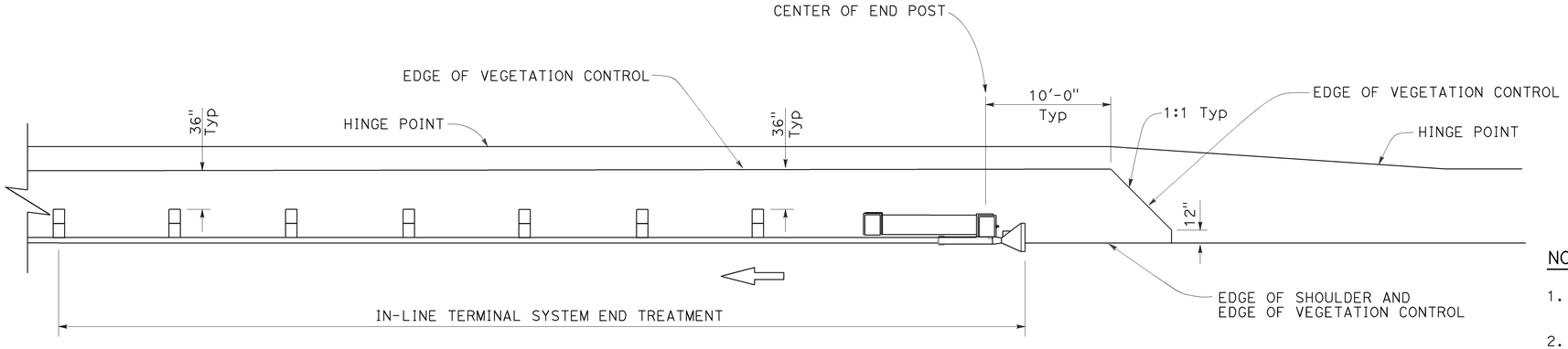

PLAN

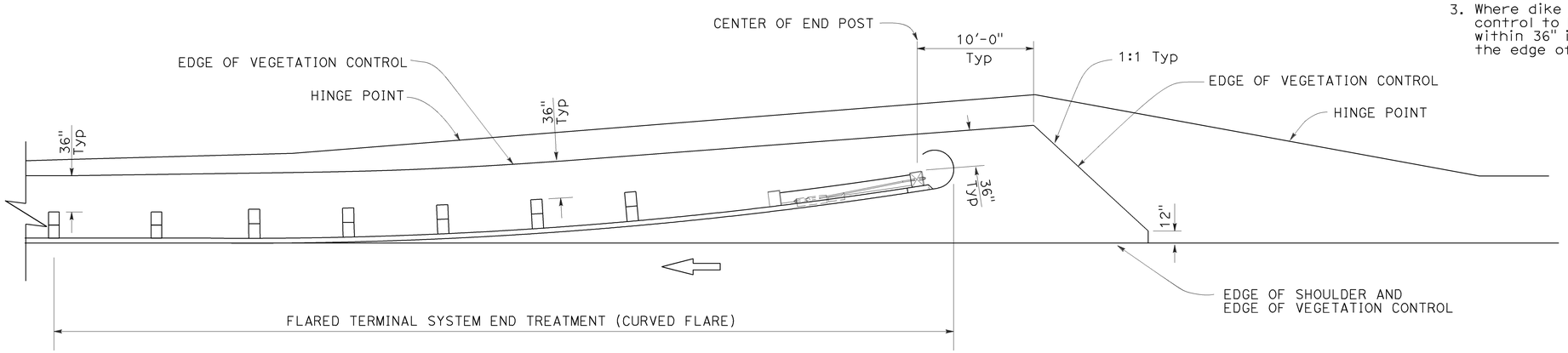

PLAN

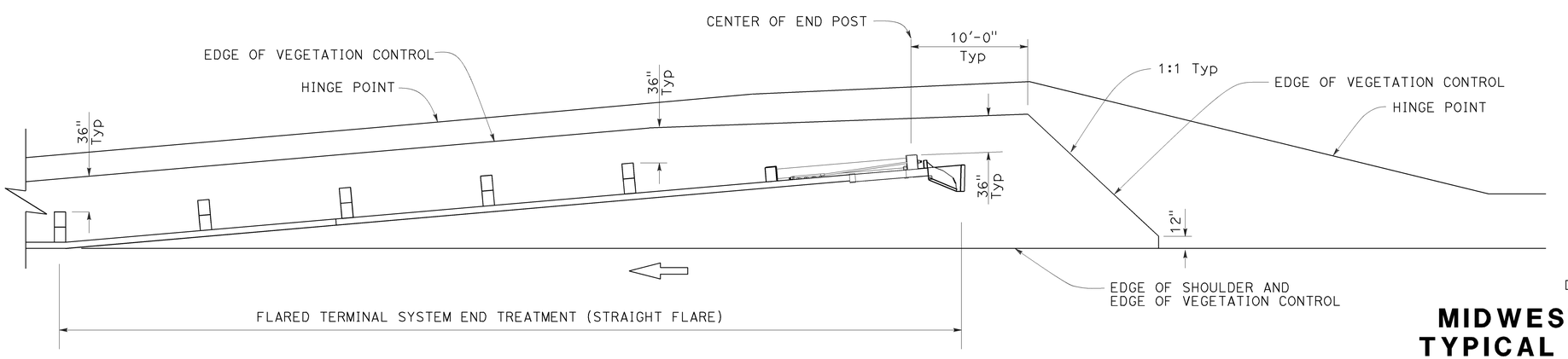

PLAN

NOTES:

1. See Revised Standard Plan RSP A77N5 for additional vegetation control details.
2. Where the distance between back of post and hinge point is less than 42", construct vegetation control to 6" from hinge point while maintaining the 8" block-out at back of post. If the 8" block-out at back of post can not be maintained, construct vegetation control flush with the back edge of post.
3. Where dike is constructed under railing, construct vegetation control to back edge of dike. Where paved shoulder is constructed within 36" in front of the post, construct vegetation control to the edge of paved shoulder.

STATE OF CALIFORNIA
DEPARTMENT OF TRANSPORTATION

MIDWEST GUARDRAIL SYSTEM TYPICAL VEGETATION CONTROL FOR TERMINAL SYSTEM END TREATMENTS

NO SCALE

RSP A77N6 DATED JULY 19, 2013 SUPPLEMENTS THE STANDARD PLANS BOOK DATED 2010.

REVISED STANDARD PLAN RSP A77N6

2010 REVISED STANDARD PLAN RSP A77N6

Dist	COUNTY	ROUTE	POST MILES TOTAL PROJECT	SHEET No.	TOTAL SHEETS
07	LA	105,110	R6.6/R8.0 13.2/14.7	59	93

Randell D. Hiatt
REGISTERED CIVIL ENGINEER

July 19, 2013
PLANS APPROVAL DATE

REGISTERED PROFESSIONAL ENGINEER
Randell D. Hiatt
No. C50200
Exp. 6-30-15
CIVIL
STATE OF CALIFORNIA

THE STATE OF CALIFORNIA OR ITS OFFICERS OR AGENTS SHALL NOT BE RESPONSIBLE FOR THE ACCURACY OR COMPLETENESS OF SCANNED COPIES OF THIS PLAN SHEET.

TO ACCOMPANY PLANS DATED 7-1-16

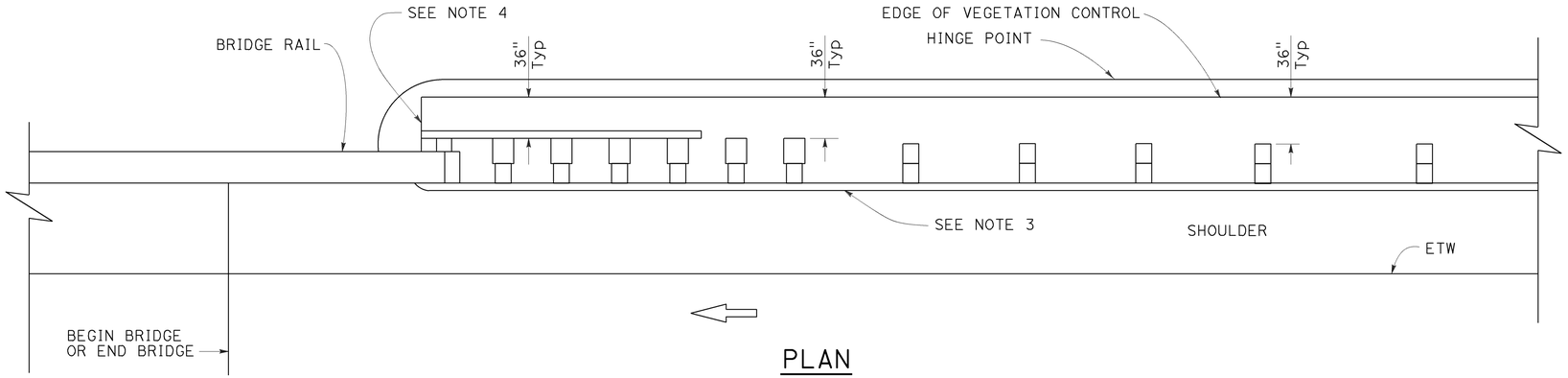

PLAN

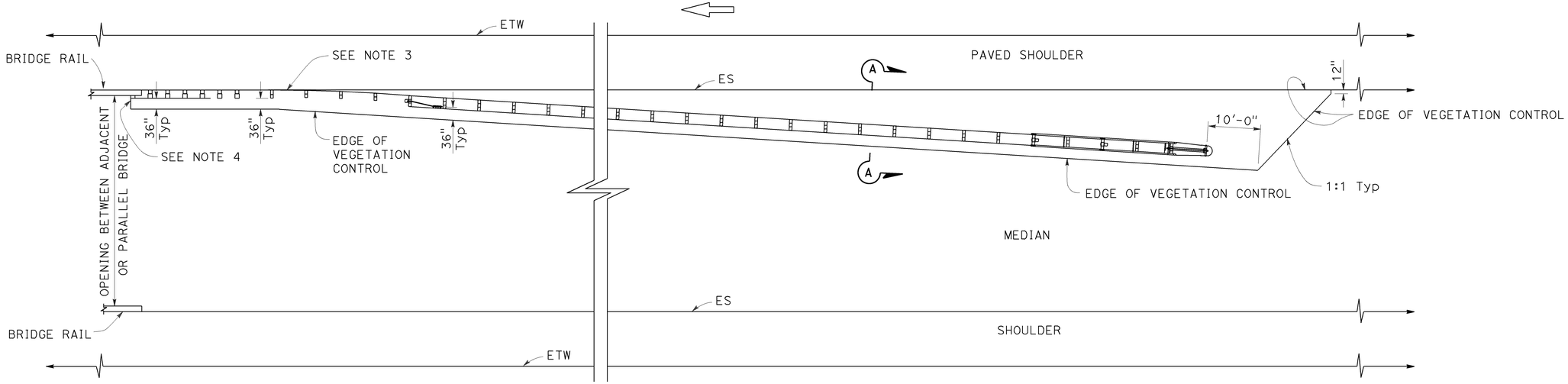

PLAN

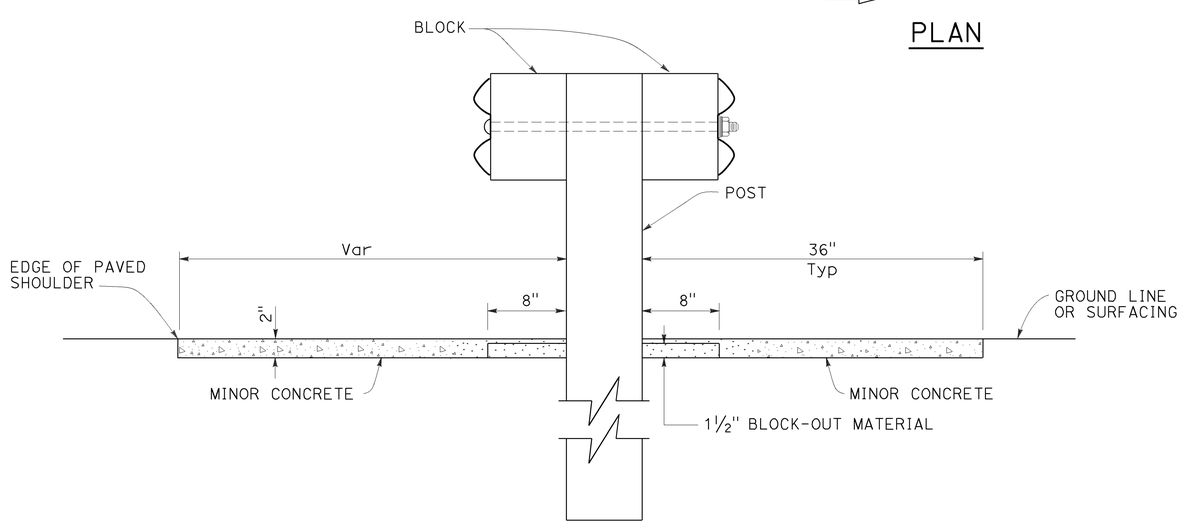

SECTION A-A

NOTES:

1. See Revised Standard Plan RSP A77N5 for additional vegetation control details.
2. Where the distance between back of post and hinge point is less than 42", construct vegetation control to 6" from hinge point while maintaining the 8" block-out at back of post. If the 8" block-out at back of post can not be maintained, construct vegetation control flush with the back edge of post.
3. Where dike is constructed under railing, construct vegetation control to back edge of dike. Where paved shoulder is constructed within 36" in front of the post, construct vegetation control to the edge of paved shoulder.
4. End vegetation control at end of backside rail element.

STATE OF CALIFORNIA
DEPARTMENT OF TRANSPORTATION

MIDWEST GUARDRAIL SYSTEM TYPICAL VEGETATION CONTROL AT STRUCTURE APPROACH

NO SCALE

RSP A77N7 DATED JULY 19, 2013 SUPPLEMENTS THE STANDARD PLANS BOOK DATED 2010.

REVISED STANDARD PLAN RSP A77N7

2010 REVISED STANDARD PLAN RSP A77N7

6-12-13

Dist	COUNTY	ROUTE	POST MILES TOTAL PROJECT	SHEET No.	TOTAL SHEETS
07	LA	105,110	R6.6/R8.0 13.2/14.7	60	93

Randell D. Hiatt
REGISTERED CIVIL ENGINEER

July 19, 2013
PLANS APPROVAL DATE

REGISTERED PROFESSIONAL ENGINEER
Randell D. Hiatt
No. C50200
Exp. 6-30-15
CIVIL
STATE OF CALIFORNIA

THE STATE OF CALIFORNIA OR ITS OFFICERS OR AGENTS SHALL NOT BE RESPONSIBLE FOR THE ACCURACY OR COMPLETENESS OF SCANNED COPIES OF THIS PLAN SHEET.

TO ACCOMPANY PLANS DATED 7-1-16

NOTES:

1. See Revised Standard Plan RSP A77N5 for additional vegetation control details.
2. Where the distance between back of post and hinge point is less than 42", construct vegetation control to 6" from hinge point while maintaining the 8" block-out at back of post. If the 8" block-out at back of post can not be maintained, construct vegetation control flush with the back edge of post.
3. Where dike is constructed under railing, construct vegetation control to back edge of dike. Where paved shoulder is constructed within 36" in front of the post, construct vegetation control to the edge of paved shoulder.

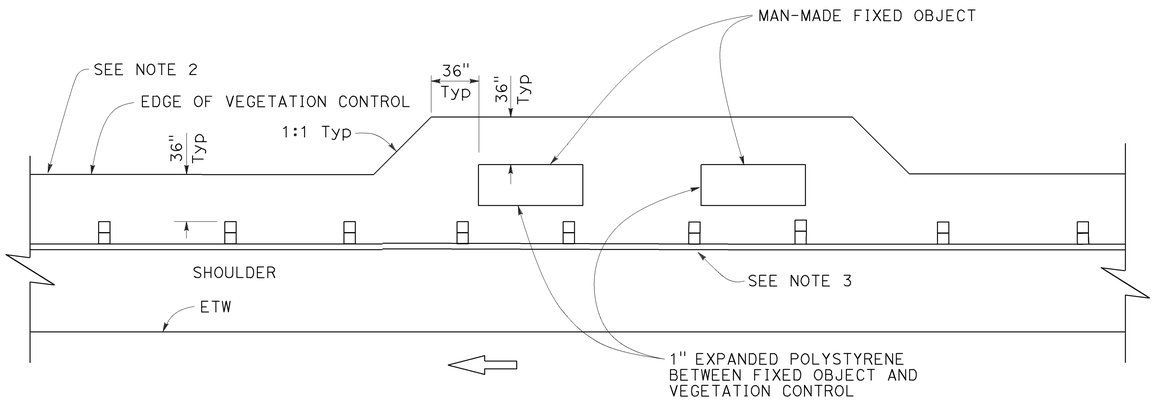

PLAN

Fixed object(s) on shoulder

STATE OF CALIFORNIA
DEPARTMENT OF TRANSPORTATION

MIDWEST GUARDRAIL SYSTEM TYPICAL VEGETATION CONTROL AT FIXED OBJECT

NO SCALE

RSP A77N8 DATED JULY 19, 2013 SUPPLEMENTS THE STANDARD PLANS BOOK DATED 2010.

REVISED STANDARD PLAN RSP A77N8

2010 REVISED STANDARD PLAN RSP A77N8

6-12-13

Dist	COUNTY	ROUTE	POST MILES TOTAL PROJECT	SHEET No.	TOTAL SHEETS
07	LA	105,110	R6.6/R8.0 13.2/14.7	61	93

Randell D. Hiatt
REGISTERED CIVIL ENGINEER

July 19, 2013
PLANS APPROVAL DATE

REGISTERED PROFESSIONAL ENGINEER
Randell D. Hiatt
No. C50200
Exp. 6-30-15
CIVIL
STATE OF CALIFORNIA

THE STATE OF CALIFORNIA OR ITS OFFICERS OR AGENTS SHALL NOT BE RESPONSIBLE FOR THE ACCURACY OR COMPLETENESS OF SCANNED COPIES OF THIS PLAN SHEET.

TO ACCOMPANY PLANS DATED 7-1-16

2010 REVISED STANDARD PLAN RSP A77N9

NOTES:

1. See Revised Standard Plan RSP A77N5 for additional vegetation control details.
2. Where dike is constructed under railing, construct vegetation control to back edge of dike. Where paved shoulder is constructed within 36" in front of the post, construct vegetation control to the edge of paved shoulder.

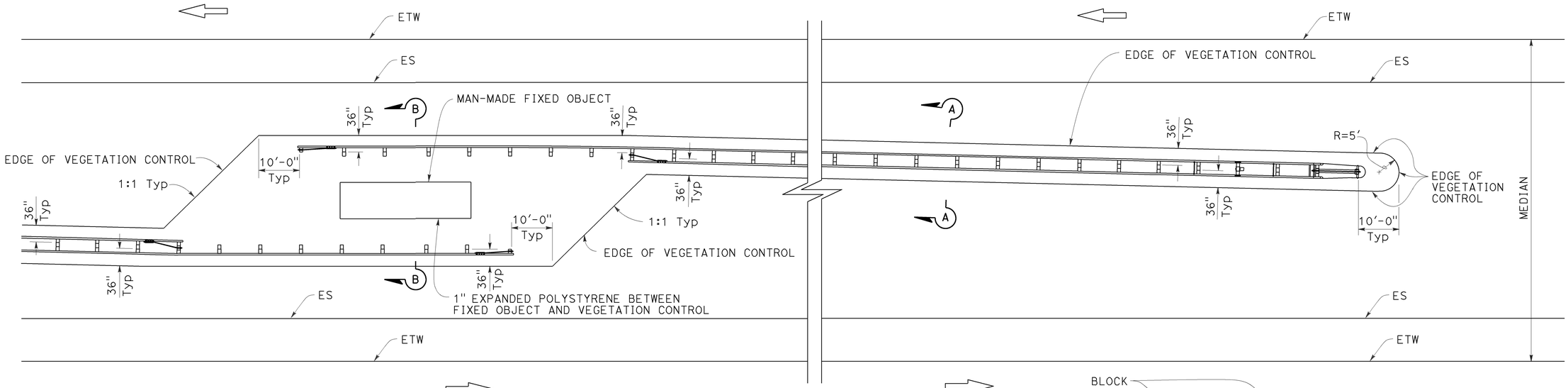

PLAN

Fixed object(s) in median

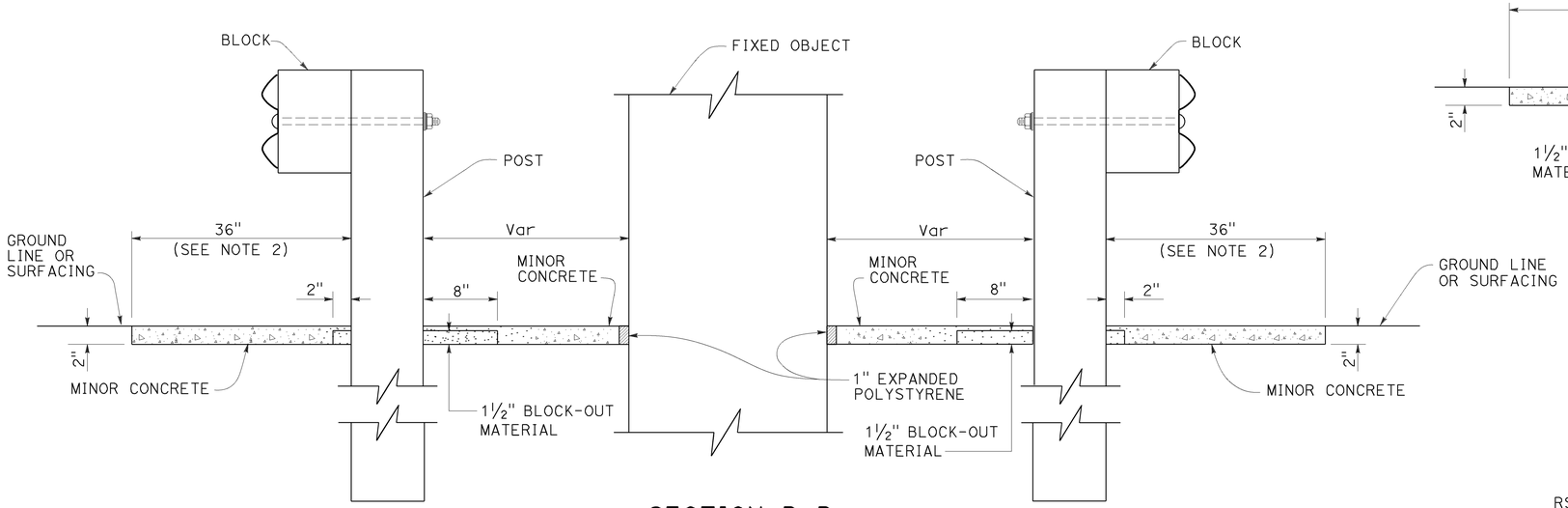

SECTION B-B

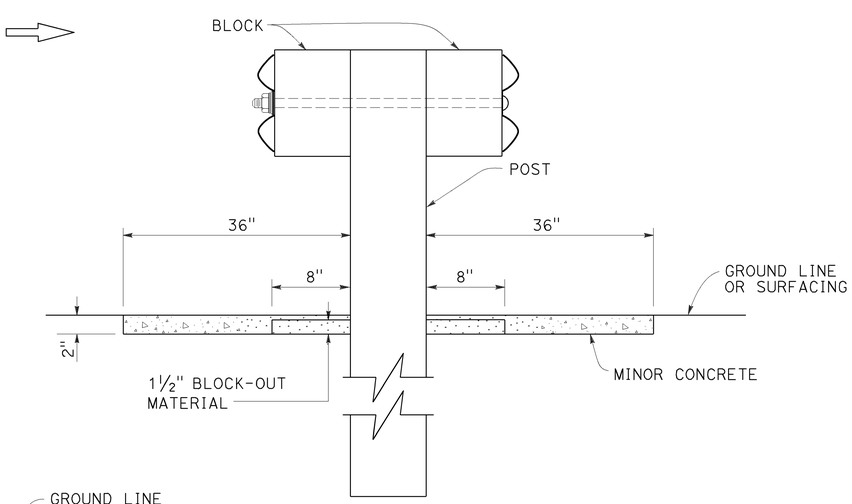

SECTION A-A

STATE OF CALIFORNIA
DEPARTMENT OF TRANSPORTATION

MIDWEST GUARDRAIL SYSTEM TYPICAL VEGETATION CONTROL AT FIXED OBJECT

NO SCALE

RSP A77N9 DATED JULY 19, 2013 SUPPLEMENTS THE STANDARD PLANS BOOK DATED 2010.

REVISED STANDARD PLAN RSP A77N9

6-12-13

Dist	COUNTY	ROUTE	POST MILES TOTAL PROJECT	SHEET No.	TOTAL SHEETS
07	LA	105,110	R6.6/R8.0 13.2/14.7	62	93

Randell D. Hiatt
REGISTERED CIVIL ENGINEER

July 19, 2013
PLANS APPROVAL DATE

REGISTERED PROFESSIONAL ENGINEER
Randell D. Hiatt
No. C50200
Exp. 6-30-15
CIVIL
STATE OF CALIFORNIA

THE STATE OF CALIFORNIA OR ITS OFFICERS OR AGENTS SHALL NOT BE RESPONSIBLE FOR THE ACCURACY OR COMPLETENESS OF SCANNED COPIES OF THIS PLAN SHEET.

TO ACCOMPANY PLANS DATED 7-1-16

2010 REVISED STANDARD PLAN RSP A77N10

NOTES:

1. See Revised Standard Plan RSP A77N5 for additional vegetation control details.
2. Where dike is constructed under railing, construct vegetation control to back edge of dike. Where paved shoulder is constructed within 36" in front of the post, construct vegetation control to the edge of paved shoulder.

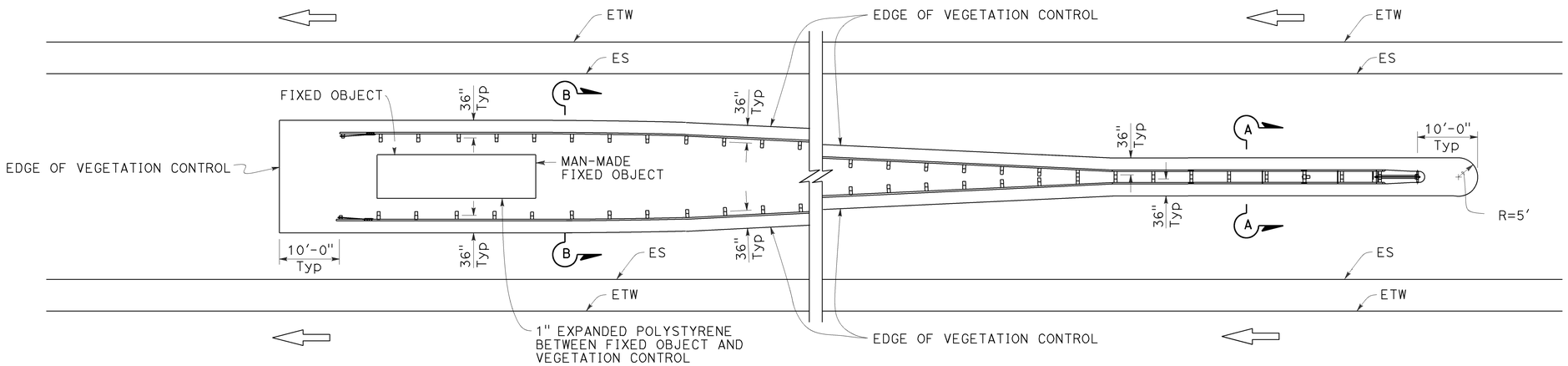

PLAN

Fixed object(s) between separate roadbeds
(One-Way Traffic)

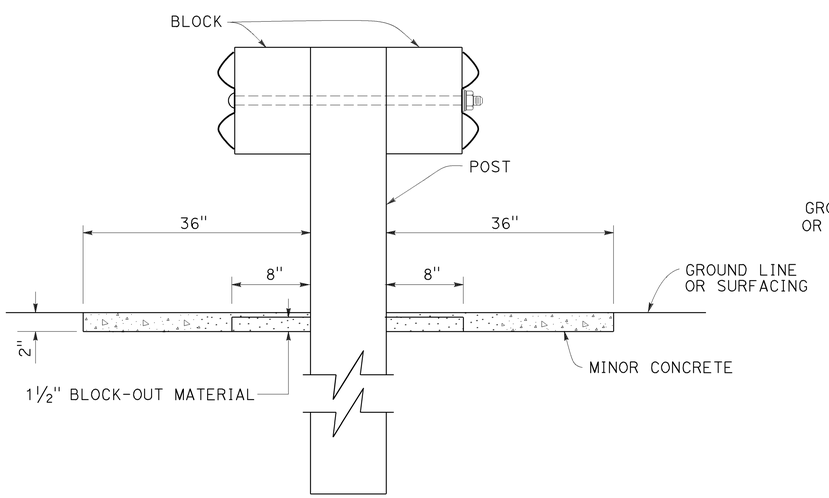

SECTION A-A

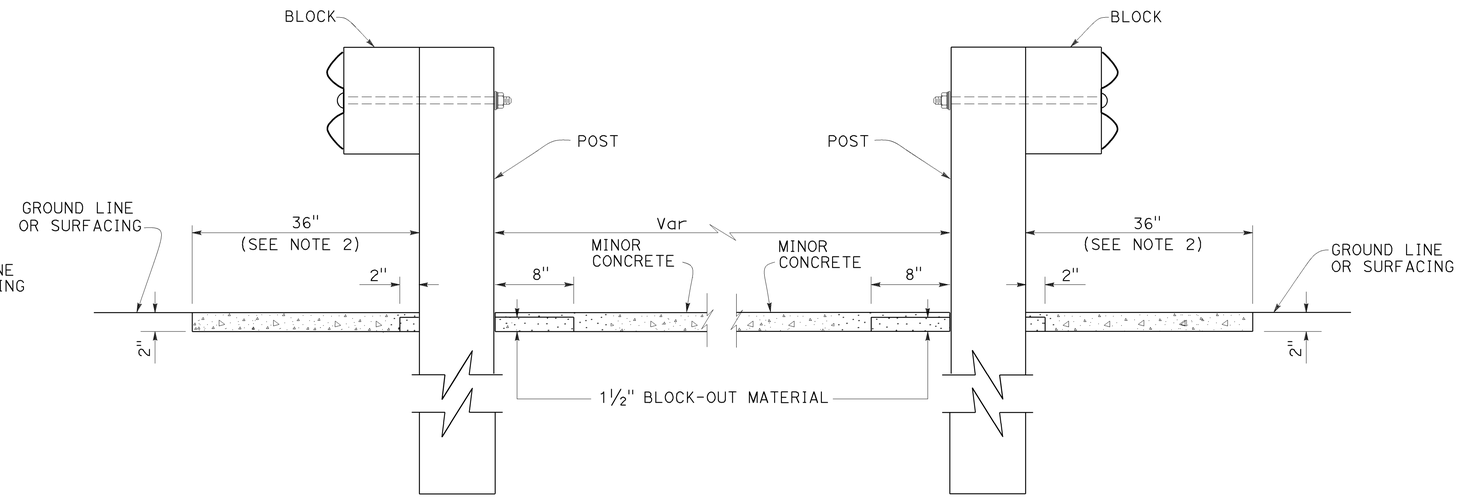

SECTION B-B

STATE OF CALIFORNIA
DEPARTMENT OF TRANSPORTATION

MIDWEST GUARDRAIL SYSTEM TYPICAL VEGETATION CONTROL AT FIXED OBJECT

NO SCALE

RSP A77N10 DATED JULY 19, 2013 SUPPLEMENTS THE STANDARD PLANS BOOK DATED 2010.

REVISED STANDARD PLAN RSP A77N10

6-12-13

Dist	COUNTY	ROUTE	POST MILES TOTAL PROJECT	SHEET No.	TOTAL SHEETS
07	LA	105,110	R6.6/R8.0 13.2/14.7	63	93

Randell D. Hiatt
REGISTERED CIVIL ENGINEER

July 19, 2013
PLANS APPROVAL DATE

REGISTERED PROFESSIONAL ENGINEER Randell D. Hiatt No. C50200 Exp. 6-30-15 CIVIL STATE OF CALIFORNIA

THE STATE OF CALIFORNIA OR ITS OFFICERS OR AGENTS SHALL NOT BE RESPONSIBLE FOR THE ACCURACY OR COMPLETENESS OF SCANNED COPIES OF THIS PLAN SHEET.

TO ACCOMPANY PLANS DATED 7-1-16

2010 REVISED STANDARD PLAN RSP A77R3

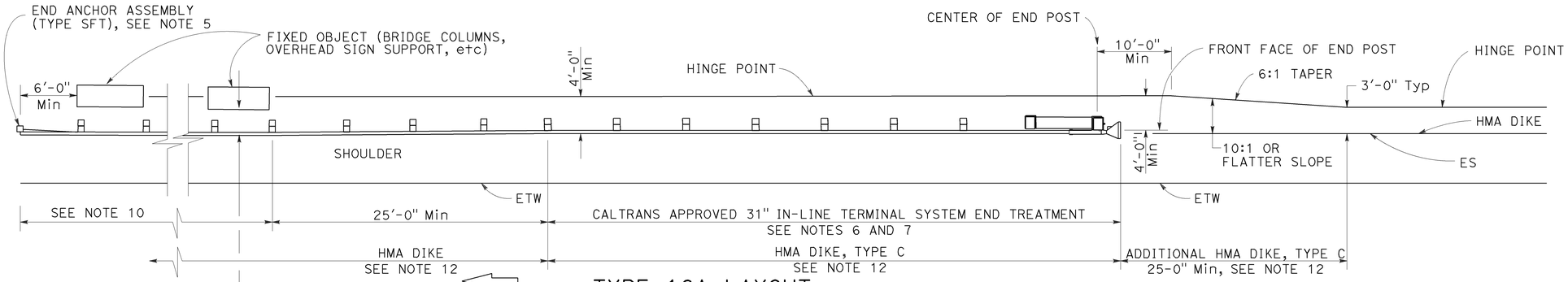

TYPE 16A LAYOUT

(MGS installation at roadside fixed object or objects with 31" in-line end treatment at traffic approach end of railing)
See Notes 11 and 12

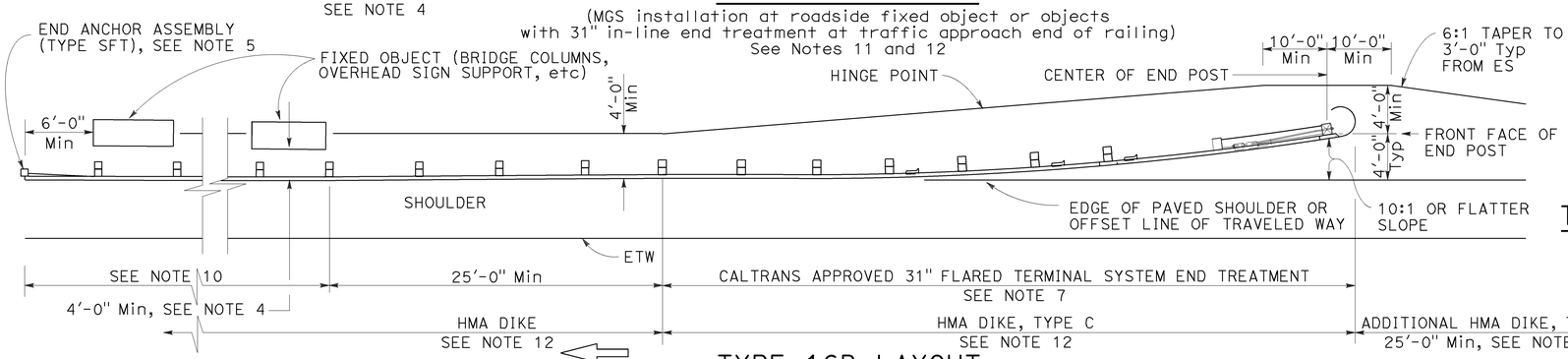

TYPE 16B LAYOUT

(MGS installation at roadside fixed object or objects with 31' flared end treatment at traffic approach end of railing)
See Notes 11 and 12

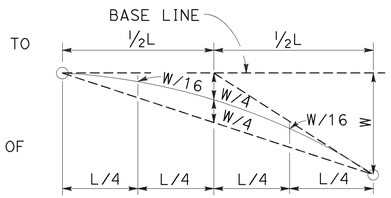

TYPIC AL PARABOLIC LAYOUT

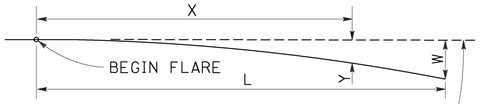

BASE LINE (EDGE OF PAVED SHOULDER OR OFFSET LINE OF EDGE OF TRAVELED WAY)

$$Y = \frac{WX^2}{L^2}$$

Y = OFFSET FROM BASE LINE
W = MAXIMUM OFFSET
X = DISTANCE ALONG BASE LINE
L = LENGTH OF FLARE

PARABOLIC FLARE OFFSETS

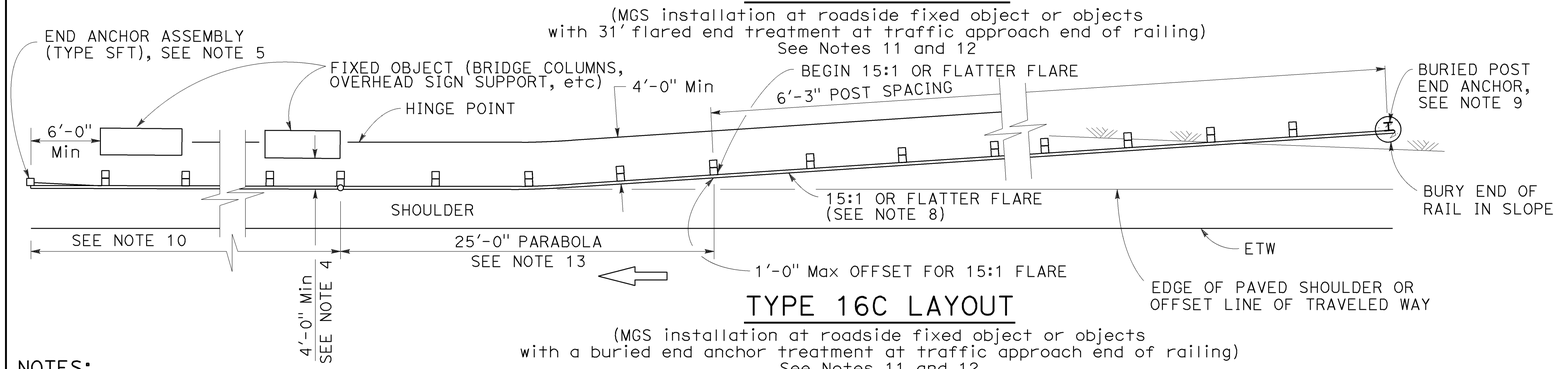

TYPE 16C LAYOUT

(MGS installation at roadside fixed object or objects with a buried end anchor treatment at traffic approach end of railing)
See Notes 11 and 12

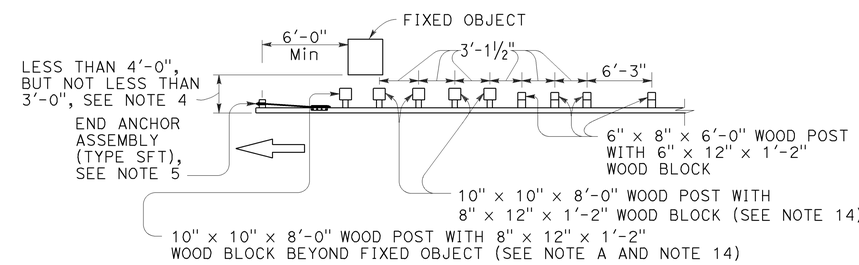

NOTE A: For a series of fixed objects (bridge columns, overhead sign supports, etc.) additional 10" x 10" x 8'-0" wood post with 8" x 12" x 1'-2" wood blocks at 3'-1½" center to center spacing are to be used between fixed objects.

STRENGTHENED MIDWEST GUARDRAIL SYSTEM SECTIONS FOR FIXED OBJECT

Use strengthened MGS sections with Types 16A, 16B or 16C layouts where minimum clearance between the face of the railing and fixed object(s) is less than 4'-0", but not less than 3'-0". See Note 4

NOTES:

1. Line post, blocks and hardware to be used are shown on Revised Standard Plans RSP A77L1, RSP A77L2, RSP A77M1, RSP A77N1 and RSP A77N2.
2. MGS post spacing to be 6'-3" center to center, except as otherwise noted.
3. Except as noted, line posts are 6" x 8" x 6'-0" wood with 6" x 12" x 1'-2" wood blocks. W6 x 8.5 or W6 x 9 steel posts, 6'-0" in length, with 6" x 12" x 1'-2" notched wood blocks or notched recycled plastic blocks may be used for 6" x 8" x 6'-0" wood line posts with 6" x 12" x 1'-2" wood blocks where applicable and when specified.
4. A 4'-0" minimum clearance is required between the face of the railing and the face of a fixed object located directly behind MGS sections with post spacing of 6'-3". Construct MGS as shown in the detail "Strengthened Midwest Guardrail System Sections for Fixed Object" on this plan, where the clearance between the face of the railing and the face of a fixed object is less than 4'-0", but not less than 3'-0". Where the clearance is less than 3'-0", a concrete wall or barrier should be constructed to shield the fixed object(s).
5. For End Anchor Assembly (Type SFT) details, see Revised Standard Plan RSP A77S1.
6. 31" in-line terminal system end treatments are used where site conditions will not accommodate a 31" flared end treatment.
7. The type of 31" terminal system to be used will be shown on the Project Plans.
8. The 15:1 or flatter flare used with Type 16C Layout is based on the edge of the paved shoulder or offset line of edge of the traveled way. The length of MGS within the 15:1 or flatter flare is based on site conditions and should be a length equal to multiples of 12'-6".
9. For details of the Buried Post End Anchor used with Type 16C Layout, see Revised Standard Plan RSP A77T2.
10. As site conditions dictate, construct additional MGS to shield fixed object(s). Additional MGS length equal to multiples of 12'-6". Post spacing at 6'-3" except as specified in Note 4.
11. Layout Types 16A, 16B or 16C are typically used where MGS is recommended to shield roadside fixed object(s) and a crashworthy 31" end treatment is required for only one direction of traffic.
12. Where placement of dike is required with MGS, see Revised Standard Plan RSP A77N4 for dike positioning details.
13. For typical flare offsets for 25'-0" length parabola with maximum offset of 1'-0", see Revised Standard Plan RSP A77P1.
14. W6 x 15 steel post, 8'-0" in length, with 8" x 12" x 1'-2" notched wood block or notched recycled plastic blocks may be used in place of the 10" x 10" x 8'-0" wood post with 8" x 12" x 1'-2" wood block shown in the detail "Strengthened Midwest Guardrail System Sections for Fixed Object".

STATE OF CALIFORNIA
DEPARTMENT OF TRANSPORTATION

MIDWEST GUARDRAIL SYSTEM TYPICAL LAYOUTS FOR ROADSIDE FIXED OBJECTS

NO SCALE

RSP A77R3 DATED JULY 19, 2013 SUPPLEMENTS THE STANDARD PLANS BOOK DATED 2010.

REVISED STANDARD PLAN RSP A77R3

6-20-13

Dist	COUNTY	ROUTE	POST MILES TOTAL PROJECT	SHEET No.	TOTAL SHEETS
07	LA	105,110	R6.6/R8.0 13.2/14.7	64	93

Randell D. Hiatt
REGISTERED CIVIL ENGINEER

November 15, 2013
PLANS APPROVAL DATE

REGISTERED PROFESSIONAL ENGINEER
Randell D. Hiatt
No. C50200
Exp. 6-30-15
CIVIL
STATE OF CALIFORNIA

THE STATE OF CALIFORNIA OR ITS OFFICERS OR AGENTS SHALL NOT BE RESPONSIBLE FOR THE ACCURACY OR COMPLETENESS OF SCANNED COPIES OF THIS PLAN SHEET.

TO ACCOMPANY PLANS DATED 7-1-16

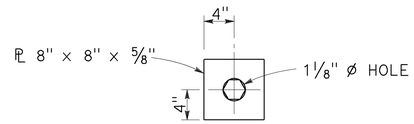

DETAIL "A"
CABLE CONNECTION
END PLATE

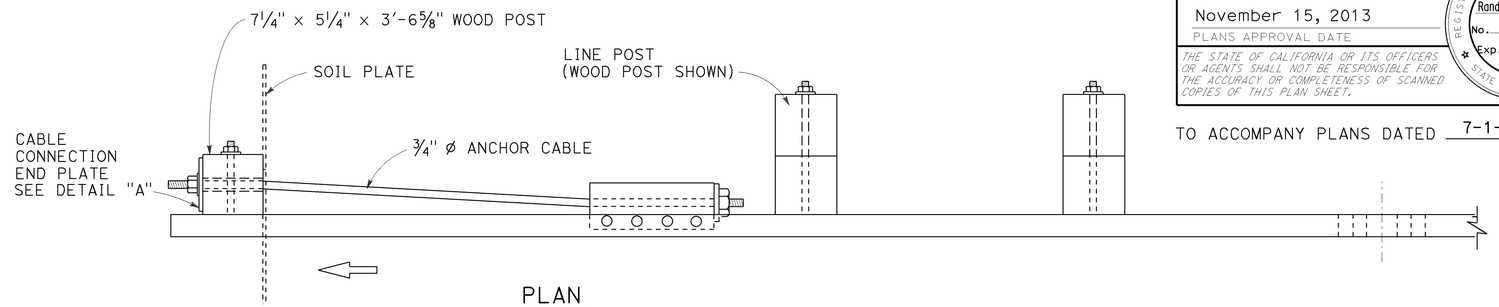

PLAN

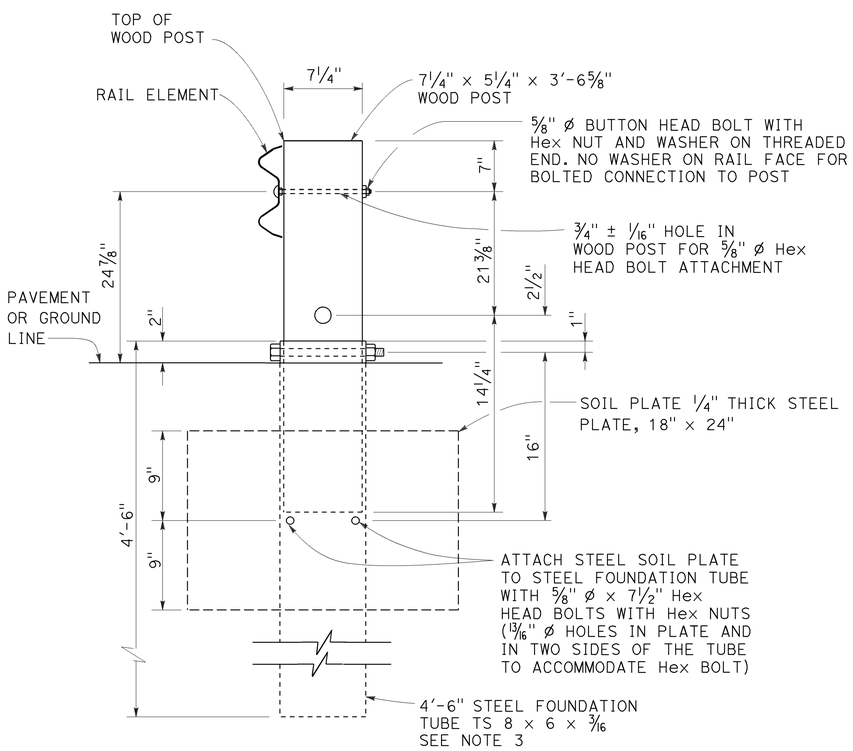

SECTION A-A

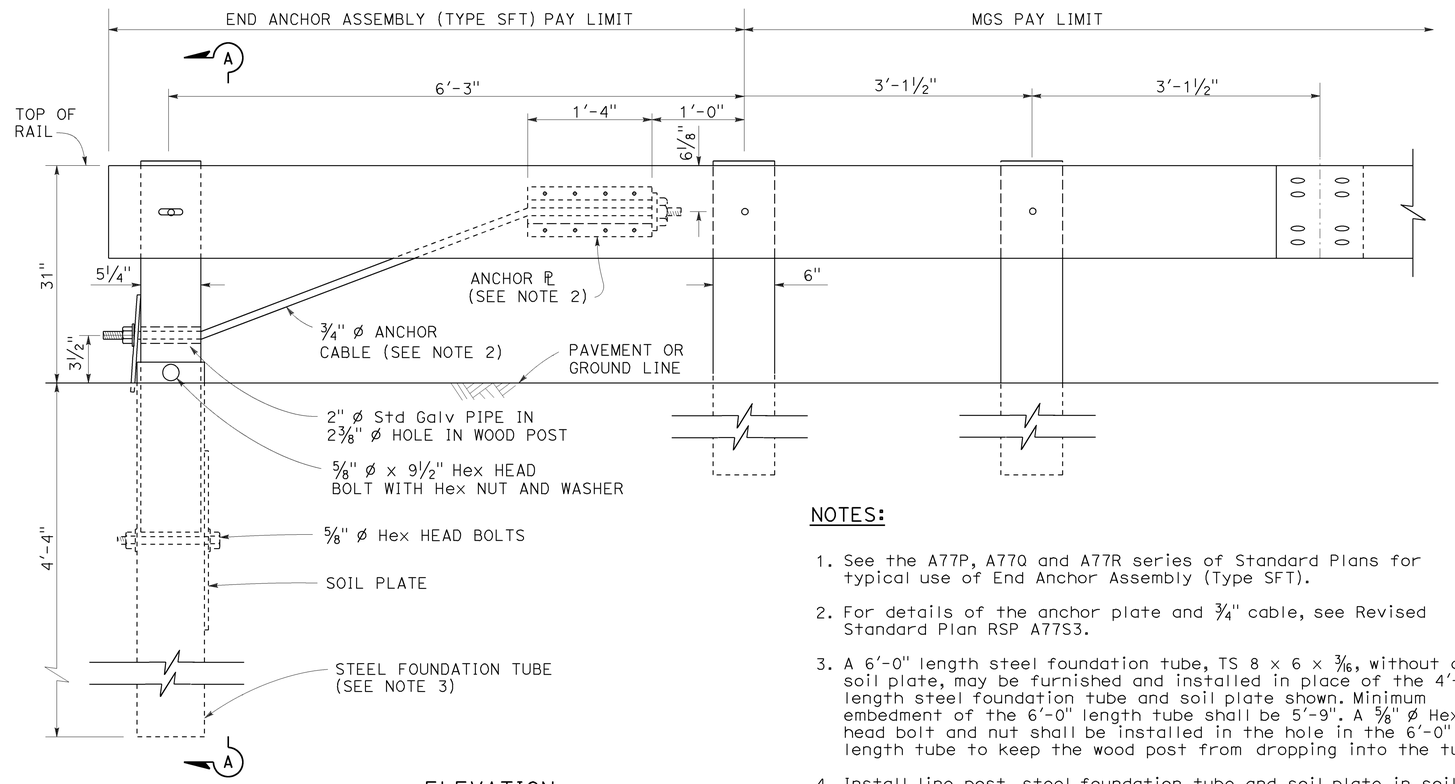

ELEVATION

END ANCHOR
ASSEMBLY (TYPE SFT)
See Note 1

NOTES:

1. See the A77P, A77Q and A77R series of Standard Plans for typical use of End Anchor Assembly (Type SFT).
2. For details of the anchor plate and 3/4" cable, see Revised Standard Plan RSP A77S3.
3. A 6'-0" length steel foundation tube, TS 8 × 6 × 3/16, without a soil plate, may be furnished and installed in place of the 4'-6" length steel foundation tube and soil plate shown. Minimum embedment of the 6'-0" length tube shall be 5'-9". A 5/8" ø Hex head bolt and nut shall be installed in the hole in the 6'-0" length tube to keep the wood post from dropping into the tube.
4. Install line post, steel foundation tube and soil plate in soil.

STATE OF CALIFORNIA
DEPARTMENT OF TRANSPORTATION

MIDWEST GUARDRAIL SYSTEM END ANCHOR ASSEMBLY (TYPE SFT)

NO SCALE

RSP A77S1 DATED NOVEMBER 15, 2013 SUPERSEDES RSP A77S1
DATED JULY 19, 2013 THAT SUPPLEMENTS THE STANDARD PLANS BOOK DATED 2010.

REVISED STANDARD PLAN RSP A77S1

2010 REVISED STANDARD PLAN RSP A77S1

10-4-13

Dist	COUNTY	ROUTE	POST MILES TOTAL PROJECT	SHEET No.	TOTAL SHEETS
07	LA	105,110	R6.6/R8.0 13.2/14.7	65	93

Randell D. Hiatt
REGISTERED CIVIL ENGINEER

November 15, 2013
PLANS APPROVAL DATE

REGISTERED PROFESSIONAL ENGINEER Randell D. Hiatt No. C50200 Exp. 6-30-15 CIVIL STATE OF CALIFORNIA

THE STATE OF CALIFORNIA OR ITS OFFICERS OR AGENTS SHALL NOT BE RESPONSIBLE FOR THE ACCURACY OR COMPLETENESS OF SCANNED COPIES OF THIS PLAN SHEET.

TO ACCOMPANY PLANS DATED 7-1-16

2010 REVISED STANDARD PLAN RSP A77S3

NOTE:

See Revised Standard Plans RSP A77S1, RSP A77S2 and RSP A77T1 for typical use of anchor cable and anchor plate.

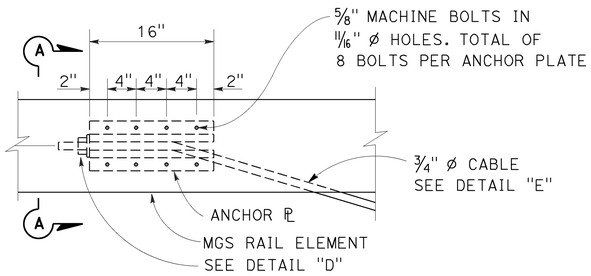

ANCHOR PLATE DETAIL
(MGS shown, TBB similar)

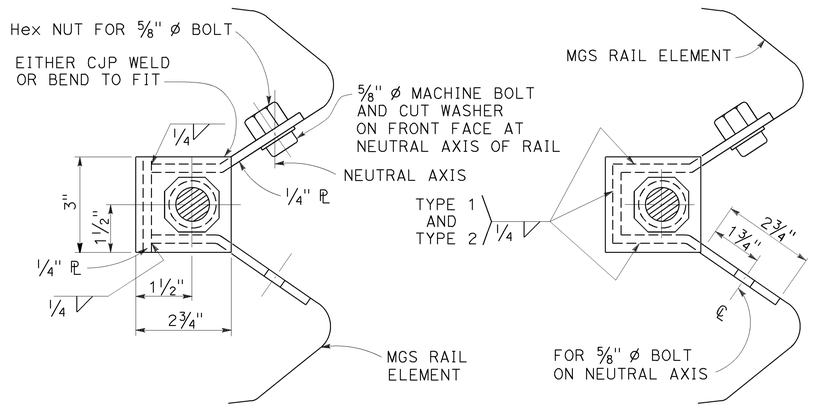

NOTE:
Dimensioning applies to both types.

SECTION A-A
(ALTERNATIVE TYPE 1)

SECTION A-A
(ALTERNATIVE TYPE 2)

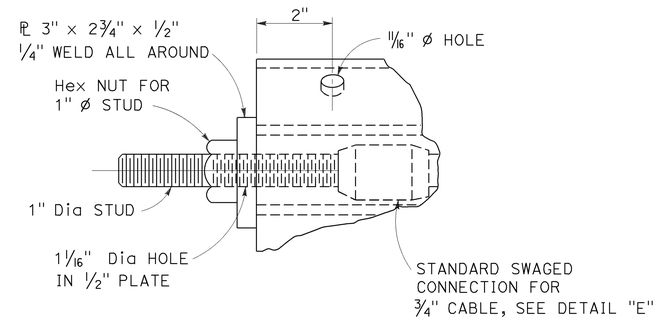

DETAIL "D"

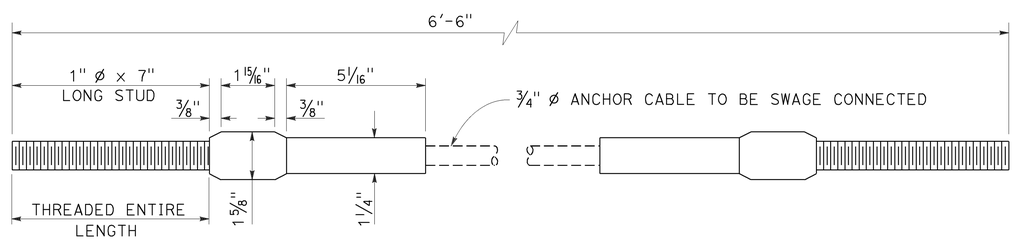

ANCHOR CABLE WITH
SWAGED FITTING AND STUD
DETAIL "E"

STATE OF CALIFORNIA
DEPARTMENT OF TRANSPORTATION

METAL RAILING ANCHOR CABLE AND ANCHOR PLATE DETAILS

NO SCALE

RSP A77S3 DATED NOVEMBER 15, 2013 SUPERSEDES RSP A77S3 DATED JULY 19, 2013 THAT SUPPLEMENTS THE STANDARD PLANS BOOK DATED 2010.

REVISED STANDARD PLAN RSP A77S3

10-4-13

Dist	COUNTY	ROUTE	POST MILES TOTAL PROJECT	SHEET No.	TOTAL SHEETS
07	LA	105,110	R6.6/R8.0 13.2/14.7	66	93

Randell D. Hiatt
REGISTERED CIVIL ENGINEER

November 15, 2013
PLANS APPROVAL DATE

REGISTERED PROFESSIONAL ENGINEER
Randell D. Hiatt
No. C50200
Exp. 6-30-15
CIVIL
STATE OF CALIFORNIA

THE STATE OF CALIFORNIA OR ITS OFFICERS OR AGENTS SHALL NOT BE RESPONSIBLE FOR THE ACCURACY OR COMPLETENESS OF SCANNED COPIES OF THIS PLAN SHEET.

TO ACCOMPANY PLANS DATED 7-1-16

2010 REVISED STANDARD PLAN RSP A77T2

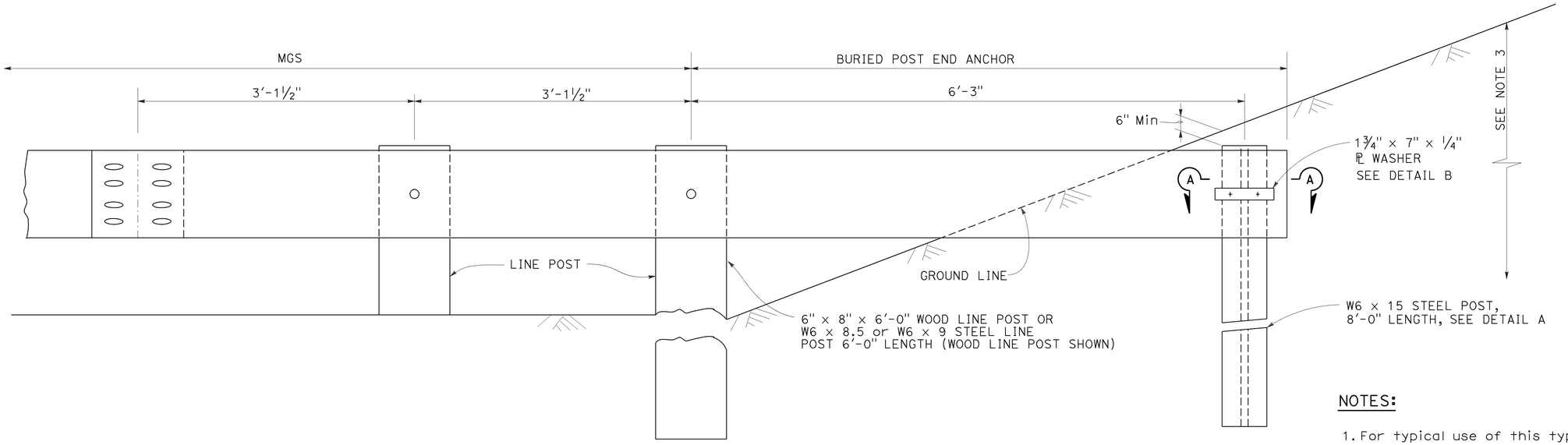

BURIED POST END ANCHOR

See Note 3

NOTES:

1. For typical use of this type of end anchor with MGS see the A77P, A77Q and A77R Series of the Standard Plans.
2. Holes excavation in the slope to construct the buried post end anchor shall be backfilled with selected earth, placed in layers approximately 1'-0" thick. Each layer shall be moistened and thoroughly compacted.
3. The buried post end anchor shall only be constructed at those locations where the slope perpendicular to the roadway is non-traversable.

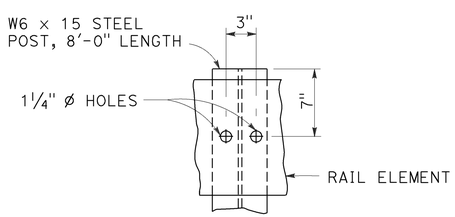

DETAIL A

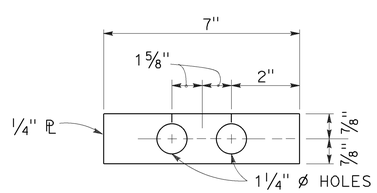

DETAIL B

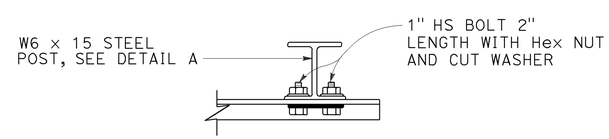

SECTION A-A

STATE OF CALIFORNIA
DEPARTMENT OF TRANSPORTATION

MIDWEST GUARDRAIL SYSTEM BURIED POST END ANCHOR

NO SCALE

RSP A77T2 DATED NOVEMBER 15, 2013 SUPERSEDES RSP A77T2
DATED JULY 19, 2013 THAT SUPPLEMENTS THE STANDARD PLANS BOOK DATED 2010.

REVISED STANDARD PLAN RSP A77T2

10-4-13

Dist	COUNTY	ROUTE	POST MILES TOTAL PROJECT	SHEET No.	TOTAL SHEETS
07	LA	105,110	R6.6/R8.0 13.2/14.7	67	93

Randell D. Hiatt
REGISTERED CIVIL ENGINEER

July 19, 2013
PLANS APPROVAL DATE

REGISTERED PROFESSIONAL ENGINEER
Randell D. Hiatt
No. C50200
Exp. 6-30-15
CIVIL
STATE OF CALIFORNIA

THE STATE OF CALIFORNIA OR ITS OFFICERS OR AGENTS SHALL NOT BE RESPONSIBLE FOR THE ACCURACY OR COMPLETENESS OF SCANNED COPIES OF THIS PLAN SHEET.

TO ACCOMPANY PLANS DATED 7-1-16

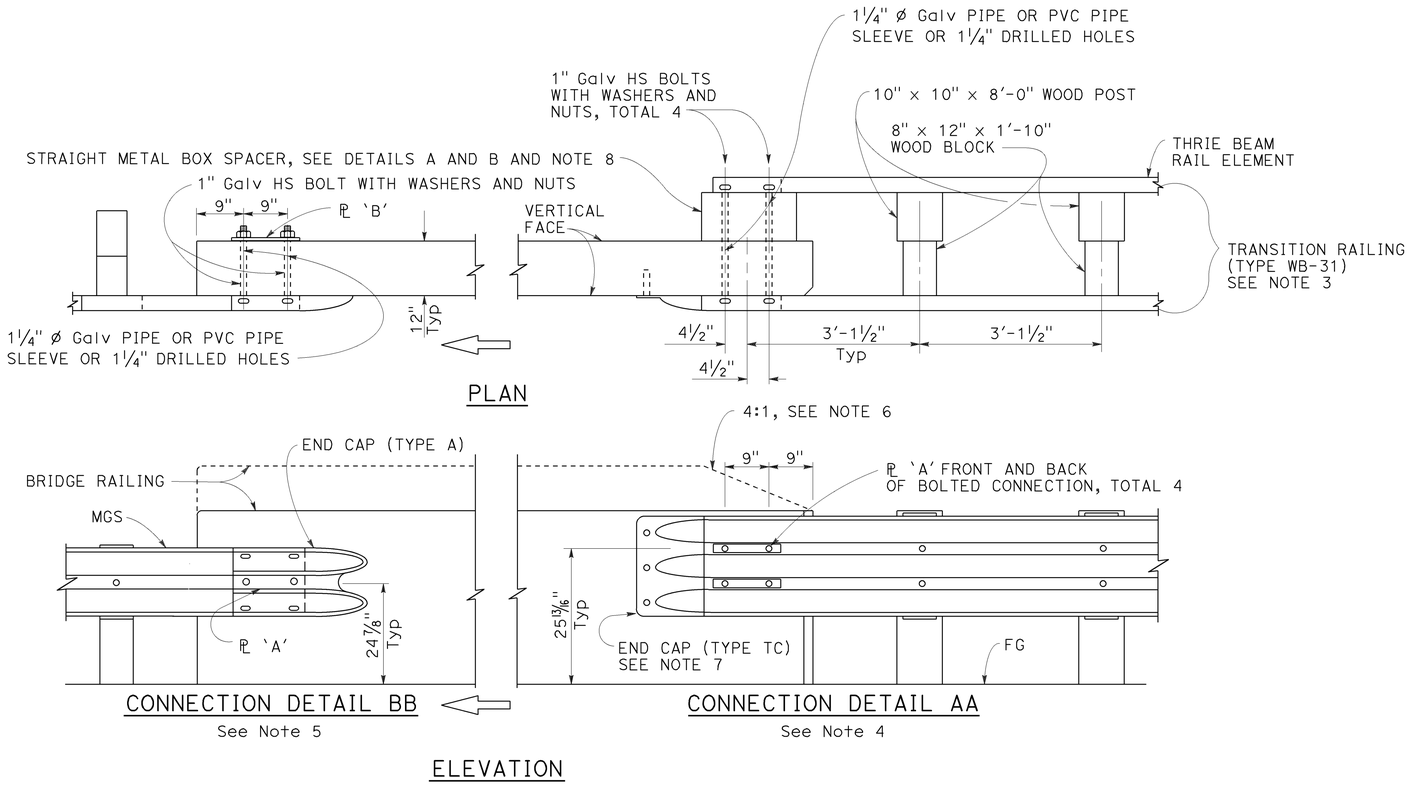

MIDWEST GUARDRAIL SYSTEM CONNECTION TO BRIDGE RAILING WITHOUT SIDEWALK

NOTES:

1. See Revised Standard Plan RSP A77U2 for additional connection details to bridges without sidewalks.
2. Additional details of posts, blocks and hardware are shown on Revised Standard Plans RSP A77M1, RSP A77N1 and RSP A77N2.
3. For additional details of Transition Railing (Type WB-31), see Revised Standard Plan RSP A77U4. Transition Railing (Type WB-31) transitions the 12 gauge MGS railing section to a heavier gage nested thrie beam railing section which is connected to the concrete bridge railing.
4. For typical use of Connection Detail AA, see Layout Types 12A and 12B on Revised Standard Plan RSP A77Q1, Layout Types 12C and 12D on Revised Standard Plan RSP A77Q2, and Layout Type 12E on Revised Standard Plan RSP A77Q3.
5. For typical use of Connection Detail BB, see Layout Type 12D (structure departure railing connection) on Revised Standard Plan RSP A77Q2 and Layout Type 12DD on Revised Standard Plan RSP A77Q5.
6. Where the height of the bridge railing exceeds the height of the thrie beam railing by more than 1" at Connection Detail AA, taper the top of the end of the bridge railing at 4:1 to match the top elevation of the thrie beam rail.
7. For details of End Cap (Type TC), see Revised Standard Plan RSP A77U4.
8. See Revised Standard Plan RSP A77U4 for additional details regarding depth dimension for straight metal box spacer.

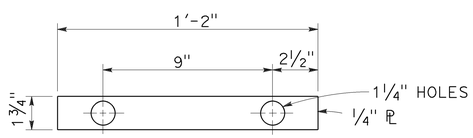

PLATE 'A'

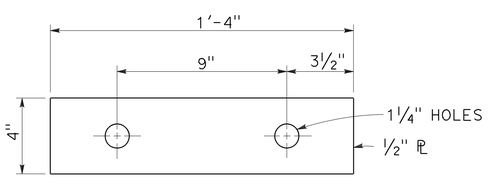

PLATE 'B'
(For backside of connection BB)

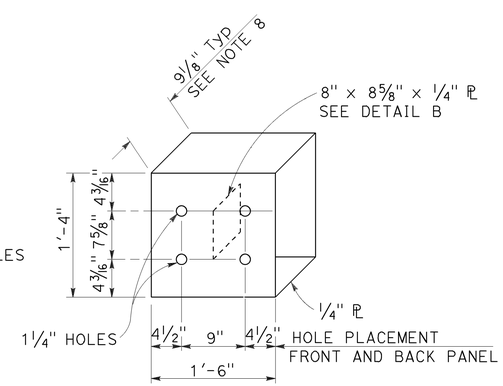

DETAIL A

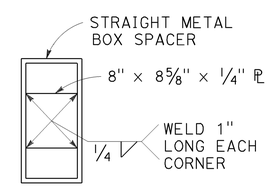

DETAIL B

STRAIGHT METAL BOX SPACER

STATE OF CALIFORNIA
DEPARTMENT OF TRANSPORTATION

MIDWEST GUARDRAIL SYSTEM CONNECTIONS TO BRIDGE RAILINGS WITHOUT SIDEWALKS DETAILS No. 1

NO SCALE

RSP A77U1 DATED JULY 19, 2013 SUPPLEMENTS THE STANDARD PLANS BOOK DATED 2010.

REVISED STANDARD PLAN RSP A77U1

2010 REVISED STANDARD PLAN RSP A77U1

7-8-13

Dist	COUNTY	ROUTE	POST MILES TOTAL PROJECT	SHEET No.	TOTAL SHEETS
07	LA	105,110	R6.6/R8.0 13.2/14.7	68	93

Randell D. Hiatt
REGISTERED CIVIL ENGINEER

July 19, 2013
PLANS APPROVAL DATE

REGISTERED PROFESSIONAL ENGINEER
Randell D. Hiatt
No. C50200
Exp. 6-30-15
CIVIL
STATE OF CALIFORNIA

THE STATE OF CALIFORNIA OR ITS OFFICERS OR AGENTS SHALL NOT BE RESPONSIBLE FOR THE ACCURACY OR COMPLETENESS OF SCANNED COPIES OF THIS PLAN SHEET.

TO ACCOMPANY PLANS DATED 7-1-16

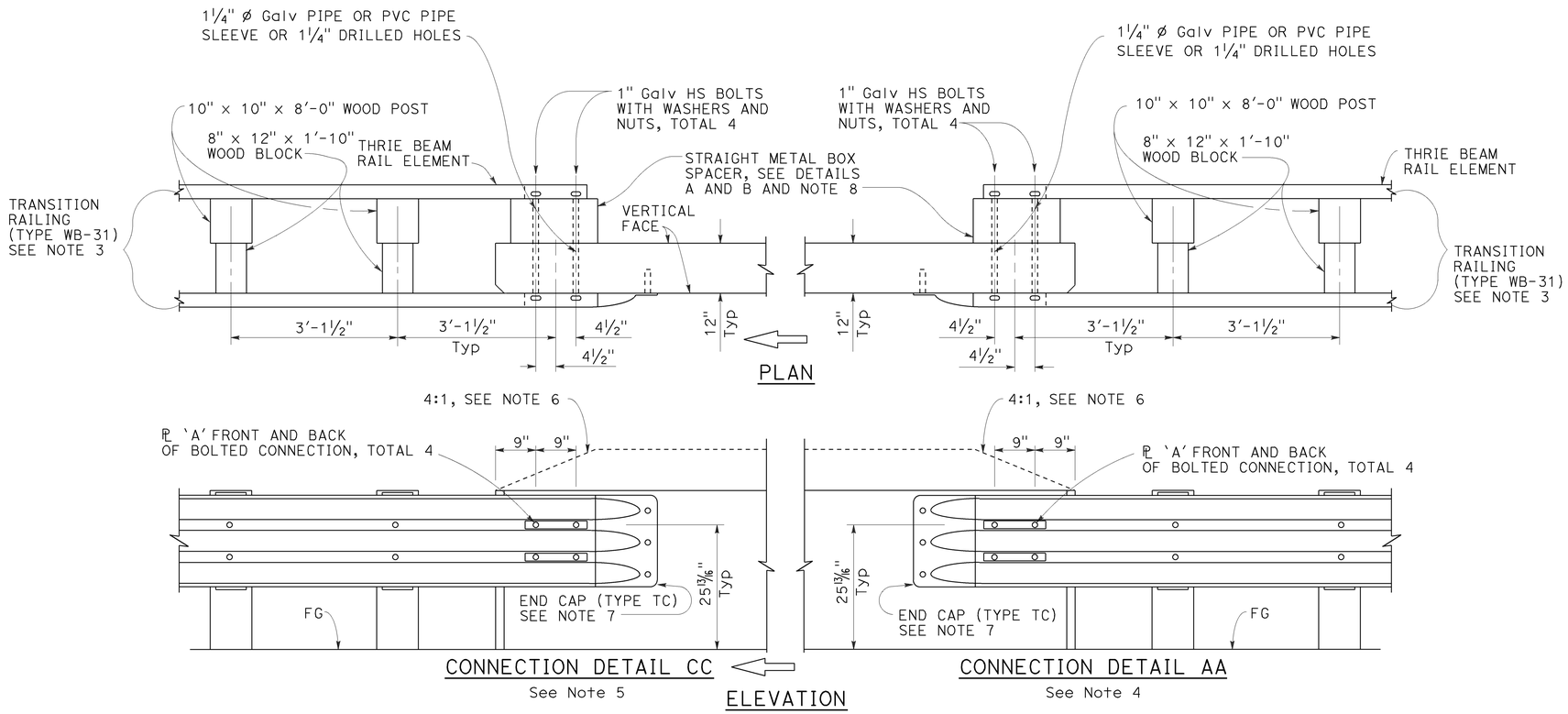

MIDWEST GUARDRAIL SYSTEM CONNECTION TO BRIDGE RAILING WITHOUT SIDEWALK

NOTES:

1. See Revised Standard Plan RSP A77U1 for additional connection details to bridges without sidewalks.
2. Additional details of posts, blocks and hardware are shown on Revised Standard Plans RSP A77M1, RSP A77N1 and RSP A77N2.
3. For additional details of Transition Railing (Type WB-31), see Revised Standard Plan RSP A77U4. Transition Railing (Type WB-31) transitions the 12 gauge MGS railing section to a heavier gage nested thrie beam railing section which is connected to the concrete bridge railing.
4. For typical use of Connection Detail AA, see Layout Types 12A and 12B on Revised Standard Plan RSP A77Q1, Layout Types 12C and 12D on Revised Standard Plan RSP A77Q2, and Layout Type 12E on Revised Standard Plan RSP A77Q3.
5. For typical use of Connection Detail CC, see Layout Types 12AA and 12BB on Revised Standard Plan RSP A77Q4 and Layout Type 12CC on Revised Standard Plan RSP A77Q5.
6. Where the height of the bridge railing exceeds the height of the thrie beam railing by more than 1" at Connection Detail AA and connection Detail CC, taper the top of the end of the bridge railing at 4:1 to match the top elevation of the thrie beam railing.
7. For details of End Cap (Type TC), see Revised Standard Plan RSP A77U4.
8. See Revised Standard Plan RSP A77U4 for additional details regarding depth dimension for straight metal box spacer.

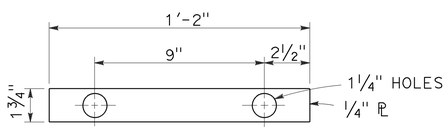

PLATE 'A'

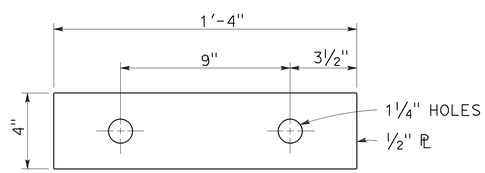

PLATE 'B'
(For backside of connection BB)

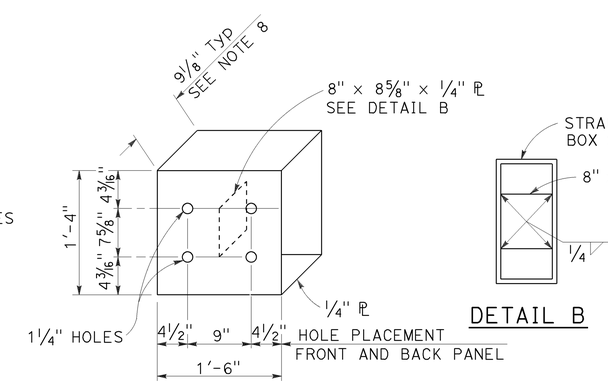

STATE OF CALIFORNIA
DEPARTMENT OF TRANSPORTATION

MIDWEST GUARDRAIL SYSTEM CONNECTIONS TO BRIDGE RAILINGS WITHOUT SIDEWALKS DETAILS No. 2

NO SCALE

RSP A77U2 DATED JULY 19, 2013 SUPPLEMENTS THE STANDARD PLANS BOOK DATED 2010.

REVISED STANDARD PLAN RSP A77U2

2010 REVISED STANDARD PLAN RSP A77U2

6-20-13

Dist	COUNTY	ROUTE	POST MILES TOTAL PROJECT	SHEET No.	TOTAL SHEETS
07	LA	105,110	R6.6/R8.0 13.2/14.7	69	93

Randell D. Hiatt
REGISTERED CIVIL ENGINEER

January 23, 2015
PLANS APPROVAL DATE

REGISTERED PROFESSIONAL ENGINEER Randell D. Hiatt No. C50200 Exp. 6-30-15 CIVIL STATE OF CALIFORNIA

THE STATE OF CALIFORNIA OR ITS OFFICERS OR AGENTS SHALL NOT BE RESPONSIBLE FOR THE ACCURACY OR COMPLETENESS OF SCANNED COPIES OF THIS PLAN SHEET.

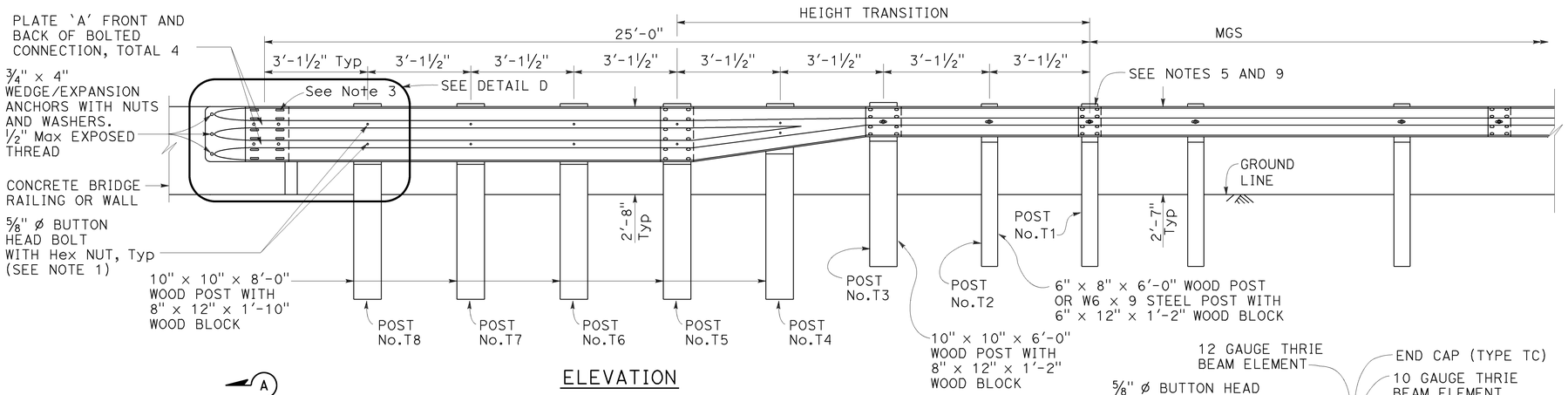

ELEVATION

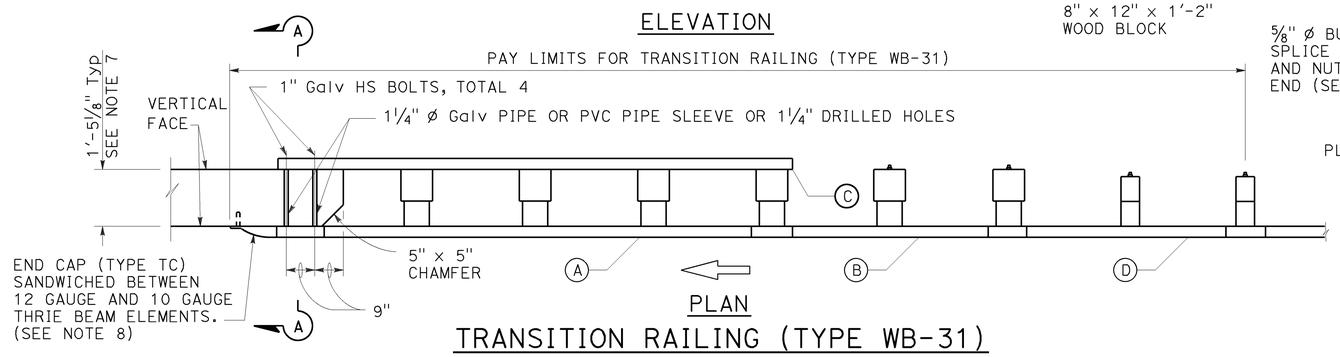

PLAN

TRANSITION RAILING (TYPE WB-31)

(No Blockout Attachment)

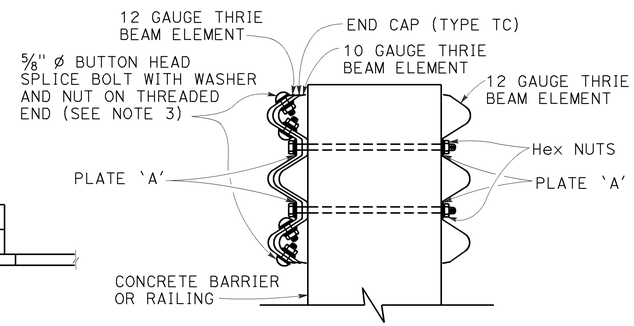

SECTION A-A

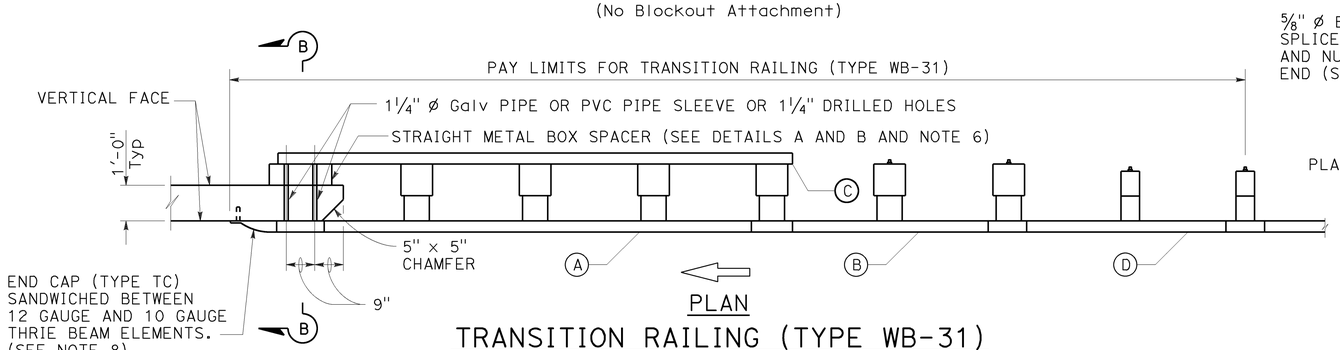

PLAN

TRANSITION RAILING (TYPE WB-31)

(Blockout Attachment)

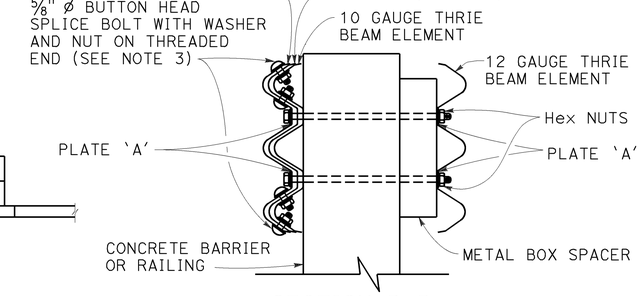

SECTION B-B

NOTES:

TO ACCOMPANY PLANS DATED 7-1-16

1. Use 5/8" ø Button head bolts and hex nuts for connections to posts. No washer on rail face for bolted connections to post.
2. The nested rail elements, end cap, and 'W' beam to thrie beam element may be spliced together prior to bolting the elements to the wood post and concrete barrier or railing.
3. Exterior splice bolt holes for rail element splices at Post No. T5 and the connection to the concrete barrier or railing shall be the standard 29/32" x 1 1/8" slot size. Interior splice bolt holes at these locations may be increased up to 1 1/4" ø. Only the top 4 and the bottom 4 splice bolts with washers and nuts are required for rail splices at Post No. T5 and the connection to the concrete barrier or railing.
4. The top elevation of Posts No. T2 through No. T7 shall not project more than 1" above the top elevation of the rail element.
5. Typically, the railing connected to Transition Railing (Type WB-31) will be either standard railing section of MGS with height transition ratio of 150:1 or a Caltrans approved 31" end treatment attached to Post No. T1.
6. The depth of the metal box spacer varies from the 9 1/8" to 1 1/2" and is dependent on the width of the concrete railing or wall. The combined dimension for the depth of the metal box spacer plus the width of railing or wall is typically 21 1/8". Where the space between the backside of the concrete railing or wall and the rear thrie beam element is less than 1 1/2", metal plates similar to Plate 'A' are to be used as spacers.
7. Where the width of the concrete railing or wall is greater than 17 1/8", wood blocks are to be used to fill the space created between the backside of Posts No. T5 through No. T8 and the rear thrie beam element. These wood blocks shall be 8" in width and 1'-2" in length. The dimension between the front thrie beam element and the rear thrie beam element is to match the width of the concrete railing or wall.
8. End cap may be installed over 12 gauge and 10 gauge thrie beam elements where transition railing is installed on the departure end of bridge railing.
9. Conform standard railing section height to 31" at Post No. T1 using height transition ratio of 150:1.

LEGEND:

(A) NESTED THRIE BEAM ELEMENTS (ONE 12 GAUGE ELEMENT NESTED OVER ONE 10 GAUGE ELEMENT).

(B) ONE ASYMMETRICAL 10 GAUGE "W" BEAM TO THRIE BEAM ELEMENT.

(C) ONE 12 GAUGE THRIE BEAM ELEMENT.

(D) ONE 10 GAUGE "W" BEAM RAIL ELEMENT (7'-3 1/2"LENGTH)

10 GAUGE = 0.138" THICK
12 GAUGE = 0.108" THICK

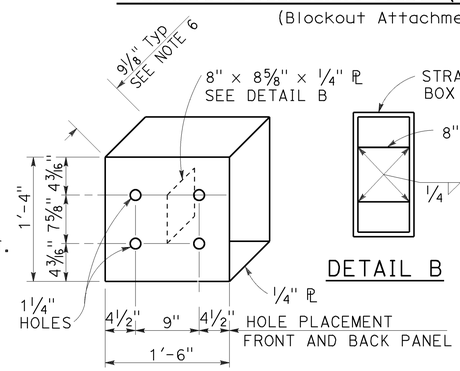

DETAIL A

STRAIGHT METAL BOX SPACER

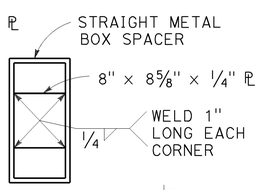

DETAIL B

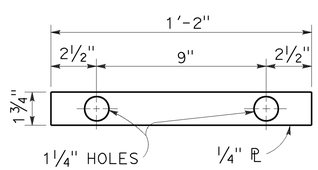

DETAIL C

PLATE 'A'

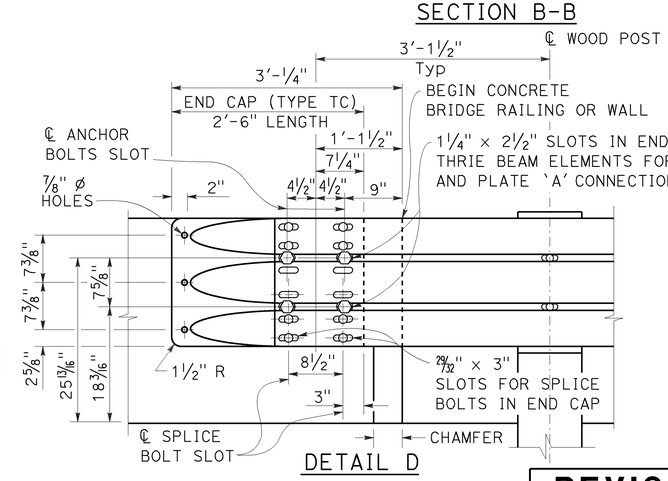

DETAIL D

STATE OF CALIFORNIA
DEPARTMENT OF TRANSPORTATION

MIDWEST GUARDRAIL SYSTEM TRANSITION RAILING (TYPE WB-31)

NO SCALE

RSP A77U4 DATED JANUARY 23, 2015 SUPERSEDES RSP A77U4 DATED NOVEMBER 15, 2013 AND RSP A77U4 DATED JULY 19, 2013 THAT SUPPLEMENTS THE STANDARD PLANS BOOK DATED 2010.

REVISED STANDARD PLAN RSP A77U4

2010 REVISED STANDARD PLAN RSP A77U4

1-8-15

Dist	COUNTY	ROUTE	POST MILES TOTAL PROJECT	SHEET No.	TOTAL SHEETS
07	LA	105,110	R6.6/R8.0 13.2/14.7	70	93

REGISTERED CIVIL ENGINEER

January 15, 2016
PLANS APPROVAL DATE

REGISTERED PROFESSIONAL ENGINEER
Michael Janzen
No. 44788
Exp. 3-31-16
CIVIL
STATE OF CALIFORNIA

THE STATE OF CALIFORNIA OR ITS OFFICERS OR AGENTS SHALL NOT BE RESPONSIBLE FOR THE ACCURACY OR COMPLETENESS OF SCANNED COPIES OF THIS PLAN SHEET.

TO ACCOMPANY PLANS DATED 7-1-16

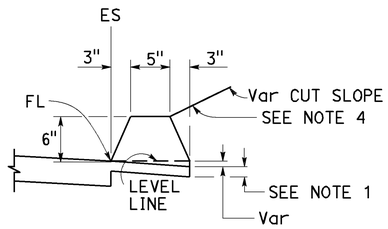

TYPE A
See Notes 3 and 5

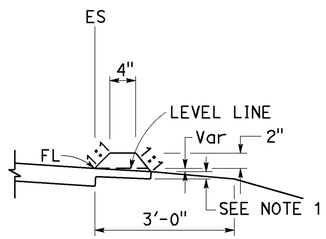

TYPE C

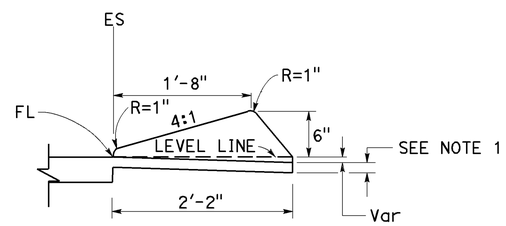

TYPE D

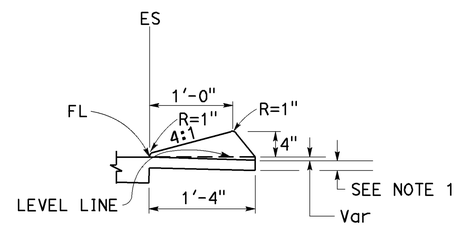

TYPE E

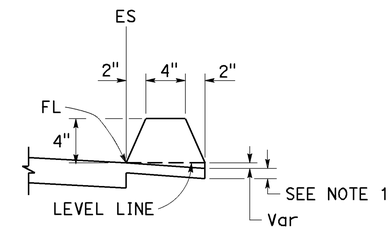

TYPE F
See Note 5

DIKES

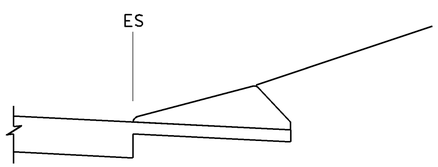

CASE C-1
Cut Slope

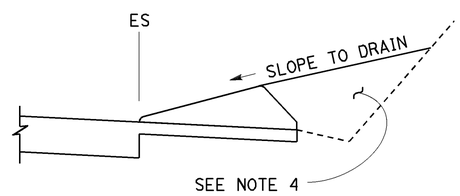

CASE C-2
Cut Slope

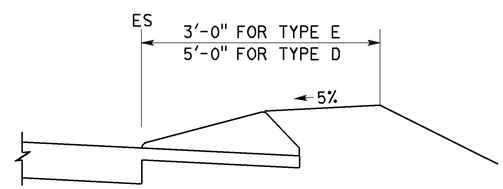

CASE F

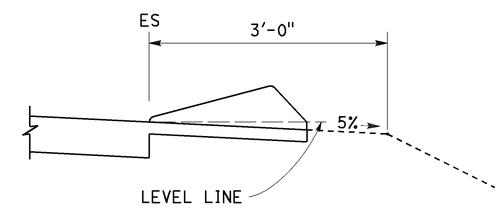

CASE R
See Note 2

TYPE D AND E BACKFILL DETAILS

NOTES:

1. For HMA shoulders only, extend top layer of HMA placed on the shoulder under dike with no joint at the ES. For projects with OGFC shoulders, do not extend OGFC under dike. See project plans for modified dike detail.
2. Case R applies to retrofit only projects where restrictive conditions do not provide enough width for Case F backfill.
3. Type A dike only to be used where restrictive slope conditions do not provide enough width to use Type D or Type E dike.
4. Fill and compact with excavated material to top of dike.
5. Use Type A or F dike, where dike is required with guardrail installations. See Revised Standard Plan RSP A77N4 for dike positioning details. See Revised Standard Plan RSP A77N3 for hinge point offsets with guardrail.

DIKE QUANTITIES

TYPE	CUBIC YARDS PER LINEAR FOOT
A	0.0135
C	0.0038
D	0.0293
E	0.0130
F	0.0066

Quantities based on 5% cross slope.

STATE OF CALIFORNIA
DEPARTMENT OF TRANSPORTATION

HOT MIX ASPHALT DIKES

NO SCALE

RSP A87B DATED JANUARY 15, 2016 SUPERSEDES RSP A87B DATED JULY 19, 2013 AND STANDARD PLAN A87B DATED MAY 20, 2011 - PAGE 120 OF THE STANDARD PLANS BOOK DATED 2010.

REVISED STANDARD PLAN RSP A87B

2010 REVISED STANDARD PLAN RSP A87B

11-17-15

Dist	COUNTY	ROUTE	POST MILES TOTAL PROJECT	SHEET No.	TOTAL SHEETS
07	LA	105,110	R6.6/R8.0 13.2/14.7	71	93

REGISTERED CIVIL ENGINEER

July 19, 2013
PLANS APPROVAL DATE

REGISTERED PROFESSIONAL ENGINEER Gurinderpal Bhullar No. C48815 Exp. 9-30-14 CIVIL STATE OF CALIFORNIA

THE STATE OF CALIFORNIA OR ITS OFFICERS OR AGENTS SHALL NOT BE RESPONSIBLE FOR THE ACCURACY OR COMPLETENESS OF SCANNED COPIES OF THIS PLAN SHEET.

TO ACCOMPANY PLANS DATED 7-1-16

TABLE 1

TAPER LENGTH CRITERIA AND CHANNELIZING DEVICE SPACING

SPEED (S)	MINIMUM TAPER LENGTH * FOR WIDTH OF OFFSET 12 FEET (W)				MAXIMUM CHANNELIZING DEVICE SPACING		
					X	Y	Z **
	TANGENT 2L	MERGING L	SHIFTING L/2	SHOULDER L/3	TAPER	TANGENT	CONFLICT
mph	ft	ft	ft	ft	ft	ft	ft
20	160	80	40	27	20	40	10
25	250	125	63	42	25	50	12
30	360	180	90	60	30	60	15
35	490	245	123	82	35	70	17
40	640	320	160	107	40	80	20
45	1080	540	270	180	45	90	22
50	1200	600	300	200	50	100	25
55	1320	660	330	220	55	110	27
60	1440	720	360	240	60	120	30
65	1560	780	390	260	65	130	32
70	1680	840	420	280	70	140	35

* - For other offsets, use the following merging taper length formula for L:
For speed of 40 mph or less, $L = WS^2/60$
For speed of 45 mph or more, $L = WS$

Where: L = Taper length in feet
W = Width of offset in feet
S = Posted speed limit, off-peak 85th-percentile speed prior to work starting, or the anticipated operating speed in mph

** - Use for taper and tangent sections where there are no pavement markings or where there is a conflict between existing pavement markings and channelizers (CA).

TABLE 2

LONGITUDINAL BUFFER SPACE AND FLAGGER STATION SPACING

SPEED *	Min D **	DOWNGRADE Min D ***		
		-3%	-6%	-9%
mph	ft	ft	ft	ft
20	115	116	120	126
25	155	158	165	173
30	200	205	215	227
35	250	257	271	287
40	305	315	333	354
45	360	378	400	427
50	425	446	474	507
55	495	520	553	593
60	570	598	638	686
65	645	682	728	785
70	730	771	825	891

* - Speed is posted speed limit, off-peak 85th-percentile speed prior to work starting, or the anticipated operating speed in mph

** - Longitudinal buffer space or flagger station spacing

*** - Use on sustained downgrade steeper than -3 percent and longer than 1 mile.

TABLE 3

ADVANCE WARNING SIGN SPACING

ROAD TYPE	DISTANCE BETWEEN SIGNS *		
	A	B	C
	ft	ft	ft
URBAN - 25 mph OR LESS	100	100	100
URBAN - MORE THAN 25 mph TO 40 mph	250	250	250
URBAN - MORE THAN 40 mph	350	350	350
RURAL	500	500	500
EXPRESSWAY / FREEWAY	1000	1500	2640

* - The distances are approximate, are intended for guidance purposes only, and should be applied with engineering judgment. These distances should be adjusted by the Engineer for field conditions, if necessary, by increasing or decreasing the recommmended distances.

STATE OF CALIFORNIA
DEPARTMENT OF TRANSPORTATION

TRAFFIC CONTROL SYSTEM TABLES FOR LANE AND RAMP CLOSURES

NO SCALE

RSP T9 DATED JULY 19, 2013 SUPERSEDES RSP T9 DATED APRIL 19, 2013 THAT SUPPLEMENTS THE STANDARD PLANS BOOK DATED 2010.

REVISED STANDARD PLAN RSP T9

2010 REVISED STANDARD PLAN RSP T9

4-30-13

TO ACCOMPANY PLANS DATED 7-1-16

Dist	COUNTY	ROUTE	POST MILES TOTAL PROJECT	SHEET No.	TOTAL SHEETS
07	LA	105,110	R6.6/R8.0 13.2/14.7	72	93

REGISTERED CIVIL ENGINEER

April 19, 2013
PLANS APPROVAL DATE

REGISTERED PROFESSIONAL ENGINEER Gurinderpal Bhullar No. C48815 Exp. 9-30-14 CIVIL STATE OF CALIFORNIA

THE STATE OF CALIFORNIA OR ITS OFFICERS OR AGENTS SHALL NOT BE RESPONSIBLE FOR THE ACCURACY OR COMPLETENESS OF SCANNED COPIES OF THIS PLAN SHEET.

NOTES:

See Revised Standard Plan RSP T9 for tables.

Use cone spacing X for taper segment, Y for tangent segment or Z for conflict situations, as approriate, per Table 1, unless X, Y, or Z cone spacing is shown on this sheet.

Unless otherwise specified in the special provisions, all temporary warning signs shall have black legend on fluorescent orange background.

California codes are designated by (CA). Otherwise, Federal (MUTCD) codes are shown.

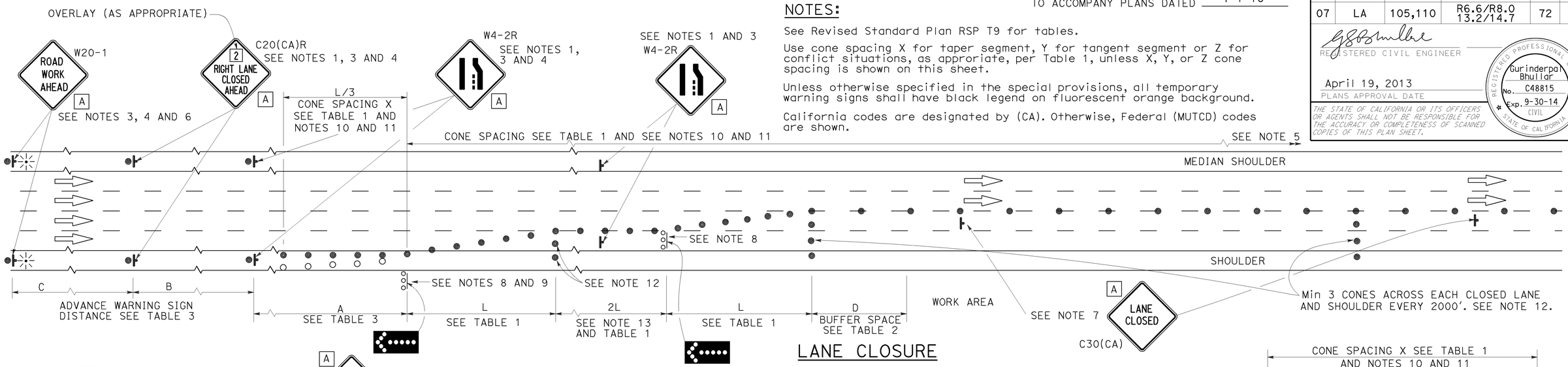

LANE CLOSURE

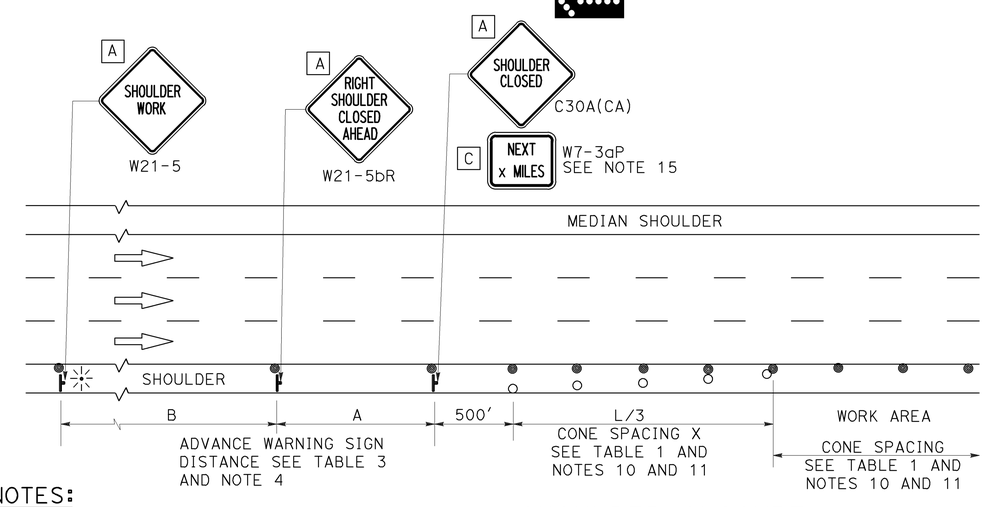

SHOULDER CLOSURE

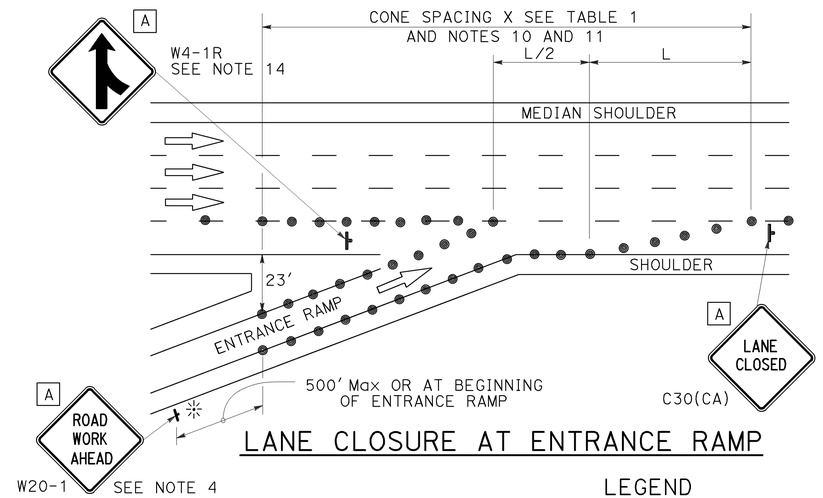

LANE CLOSURE AT ENTRANCE RAMP

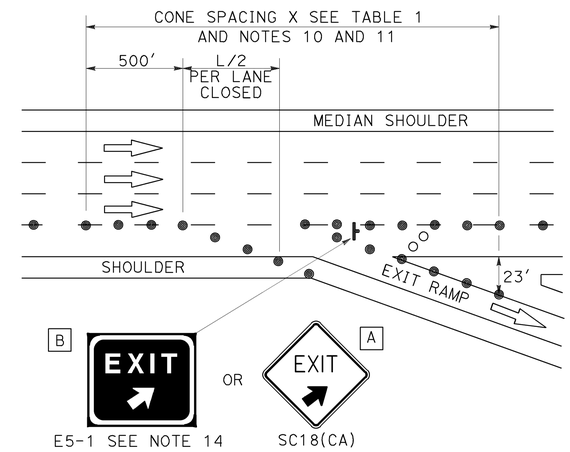

LANE CLOSURE AT EXIT RAMP

NOTES:

1. Median lane closures shall conform to the details as shown except that C20(CA)L and W4-2L signs shall be used.
2. At least one person shall be assigned to provide full time maintenance of traffic control devices for lane closures.
3. Duplicate sign installations are not required:
   a) On opposite shoulder if at least one-half of the available lanes remain open to traffic.
   b) In the median if the width of the median shoulder is less than 8' and the outside lanes are to be closed.
4. Each advance warning sign on each side of the roadway shall be equipped with at least two flags for daytime closure. Each flag shall be at least 16" x 16" in size and shall be orange or fluorescent red-orange in color. Flashing beacons shall be placed at the locations indicated for lane closure during hours of darkness.
5. A G20-2 "END ROAD WORK" sign, with minimum size of 48" x 24" as appropriate, shall be placed at the end of the lane closure unless the end of work area is obvious or ends within a larger project's limits.
6. If the W20-1 sign would follow within 2000' of a stationary W20-1 or G20-1 "ROAD WORK NEXT _____ MILES", use a C20(CA) sign for the first advance warning sign.
7. Place a C30(CA) sign every 2000' throughout length of lane closure.
8. One flashing arrow sign for each lane closed. The flashing arrow signs shall be Type I.
9. A minimum 1500' of sight distance shall be provided where possible for vehicles approaching the first flashing arrow sign. Lane closures shall not begin at top of crest vertical curve or on a horizontal curve.
10. All cones used for lane closures during the hours of darkness shall be fitted with retroreflective bands (or sleeves) as specified in the specifications.
11. Portable delineators, placed at one-half the spacing indicated for traffic cones may be used instead of cones for daytime closures only.
12. Unless otherwise specified in the special provisions, a minimum of 3 cones shall be placed transversely across each closed lane and shoulder at each location where a taper across a traffic lane ends and every 2000' as shown on the "Lane Closure" detail. Two Type II barricades may be used instead of the 3 cones. The transverse alignment of the cones or barricades on the closed shoulder may be shifted from the transverse alignment to provide access to the work.
13. Unless otherwise specified in the special provisions, the 2L tangent shown along lane lines shall be used between the L tapers required for each closed traffic lane.
14. Unless otherwise specified in the special provisions, the E5-1 or SC18(CA) and W4-1 signs shall be used as shown.
15. A W7-3aP "NEXT____ MILES" plaque must be used if theshoulder closure extends beyond the distance that can be perceived by road users.

LEGEND

- TRAFFIC CONE
- TRAFFIC CONE (OPTIONAL TAPER)
- TEMPORARY TRAFFIC CONTROL SIGN
- FLASHING ARROW SIGN (FAS)
- FAS SUPPORT OR TRAILER
- PORTABLE FLASHING BEACON

SIGN PANEL SIZE (Min)

A	48" x 48"
B	72" x 60"
C	36" x 30"

STATE OF CALIFORNIA
DEPARTMENT OF TRANSPORTATION

TRAFFIC CONTROL SYSTEM FOR LANE CLOSURE ON FREEWAYS AND EXPRESSWAYS

NO SCALE

RSP T10 DATED APRIL 19, 2013 SUPERSEDES STANDARD PLAN T10 DATED MAY 20, 2011 - PAGE 237 OF THE STANDARD PLANS BOOK DATED 2010.

REVISED STANDARD PLAN RSP T10

2010 REVISED STANDARD PLAN RSP T10

12-18-12

TO ACCOMPANY PLANS DATED 7-1-16

Dist	COUNTY	ROUTE	POST MILES TOTAL PROJECT	SHEET No.	TOTAL SHEETS
07	LA	105,110	R6.6/R8.0 13.2/14.7	73	93

REGISTERED CIVIL ENGINEER

April 19, 2013
PLANS APPROVAL DATE

REGISTERED PROFESSIONAL ENGINEER Gurinderpal Bhullar No. C48815 Exp. 9-30-14 CIVIL STATE OF CALIFORNIA

THE STATE OF CALIFORNIA OR ITS OFFICERS OR AGENTS SHALL NOT BE RESPONSIBLE FOR THE ACCURACY OR COMPLETENESS OF SCANNED COPIES OF THIS PLAN SHEET.

NOTES: See Revised Standard Plan RSP T9 for tables.

Use cone spacing X for taper segment, Y for tangent segment or Z for conflict situations, as approriate, per Table 1, unless X, Y, or Z cone spacing is shown on this sheet.

Unless otherwise specified in the special provisions, all temporary warning signs shall have black legend on fluorescent orange background.

California codes are designated by (CA). Otherwise, Federal (MUTCD) codes are shown.

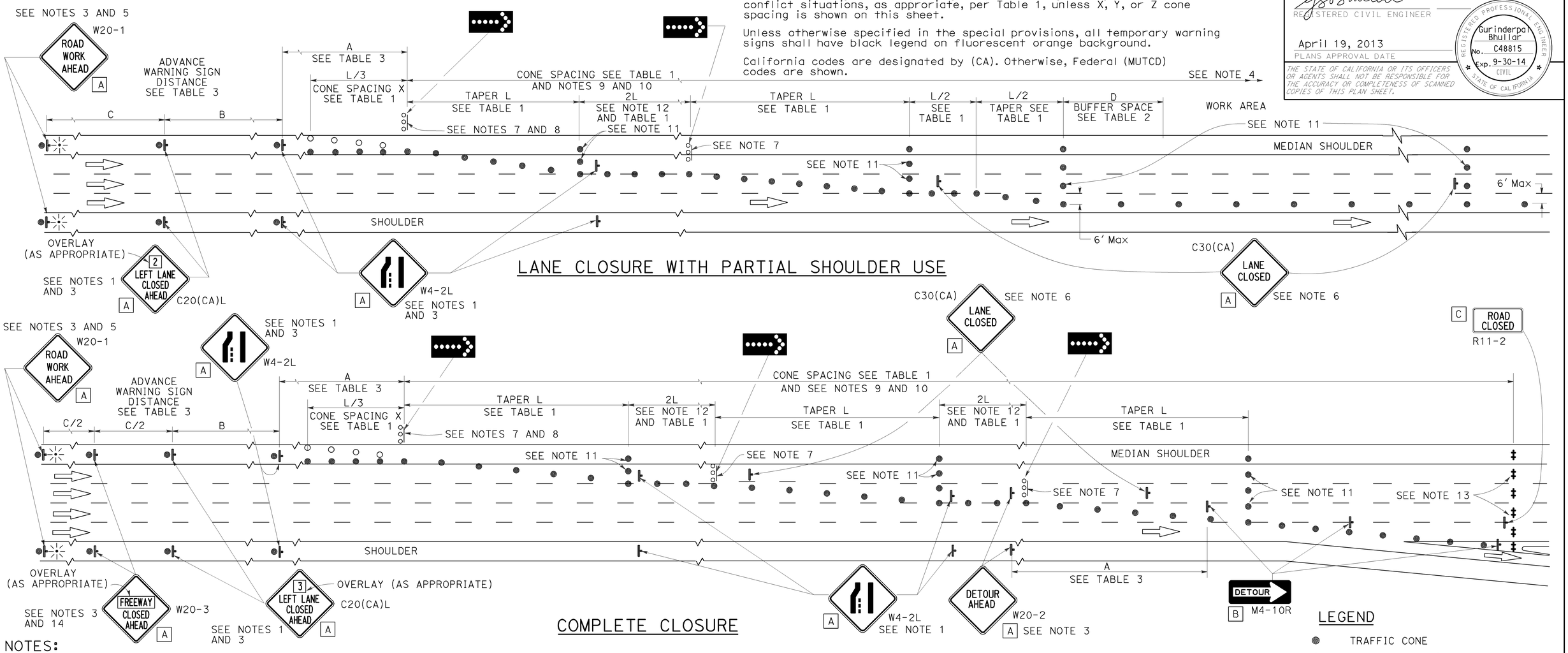

LANE CLOSURE WITH PARTIAL SHOULDER USE

COMPLETE CLOSURE

NOTES:

1. Lane closures on the right side using partial median shoulder as a traffic lane shall conform to the details as shown except that C20(CA)R and W4-2R signs shall be used.
2. At least one person shall be assigned to provide full time maintenance of traffic control devices for lane closures.
3. Each advance warning sign on each side of the roadway shall be equipped with at least two flags for daytime closure. Each flag shall be at least 16" X 16" in size and shall be orange or fluorescent red-orange in color. Flashing beacons shall be placed at the locations indicated for lane closure during hours of darkness.
4. A G20-2 "END ROAD WORK" sign, with minimum size of 48" x 24" as appropriate, shall be placed at the end of the lane closure unless the end of work area is obvious or ends within a larger project's limits.
5. If the W20-1 sign would follow within 2000' of a stationary W20-1 or G20-1 "ROAD WORK NEXT ___ MILES", use a C20(CA) sign for the first advance warning sign.
6. Place a C30(CA) sign every 2000' throughout length of lane closure.
7. One flashing arrow sign for each lane closed. The flashing arrow signs shall be Type I.
8. A minimum 1500' of sight distance shall be provided where possible for vehicles approaching the first flashing arrow sign. Lane closures shall not begin at the top of crest vertical curve or on a horizontal curve.
9. All cones used for lane closures during the hours of darkness shall be fitted with retroreflective bands (or sleeves) as specified in the specifications.
10. Portable delineators, placed at one-half the spacing indicated for traffic cones, may be used instead of cones for daytime closures only.
11. Unless otherwise specified in the special provisions, a minimum of 3 cones shall be placed transversely across each closed lane and shoulder at each location where a taper across a traffic lane ends and every 2000' as shown on the "Lane Closure With Partial Shoulder Use" detail. Two Type II barricades may be used instead of the 3 cones. The transverse alignment of the cones or barricades on the closed shoulder may be shifted from the transverse alignment to provide access to the work.
12. Unless otherwise specified in the special provisions, the 2L tangent shown along lane lines shall be used between the L tapers required for each closed traffic lane.
13. A minimum of Two Type II or III barricades shall be placed across each closed lane and shoulder at the location shown and every 2000' within the complete closure area. Within the complete closure area, the transverse alignment of the barricades on the closed shoulder may be shifted from the transverse alignment to provide access to the work.
14. When specified in the special provisions, a W20-2 "DETOUR AHEAD" sign is to be used in place of the W20-3 "FREEWAY CLOSED AHEAD" sign.

SIGN PANEL SIZE (Min)

A	48" x 48"
B	48" x 18"
C	48" x 30"

LEGEND

- TRAFFIC CONE
- TRAFFIC CONE (OPTIONAL TAPER)
- TEMPORARY TRAFFIC CONTROL SIGN
- FLASHING ARROW SIGN (FAS)
- FAS SUPPORT OR TRAILER
- PORTABLE FLASHING BEACON

STATE OF CALIFORNIA
DEPARTMENT OF TRANSPORTATION

TRAFFIC CONTROL SYSTEM FOR LANE CLOSURES ON FREEWAYS AND EXPRESSWAYS

NO SCALE

RSP T10A DATED APRIL 19, 2013 SUPERSEDES STANDARD PLAN T10A DATED MAY 20, 2011 - PAGE 238 OF THE STANDARD PLANS BOOK DATED 2010.

REVISED STANDARD PLAN RSP T10A

2010 REVISED STANDARD PLAN RSP T10A

12-18-13

Dist	COUNTY	ROUTE	POST MILES TOTAL PROJECT	SHEET No.	TOTAL SHEETS
07	LA	105,110	R6.6/R8.0 13.2/14.7	74	93

REGISTERED CIVIL ENGINEER

April 19, 2013
PLANS APPROVAL DATE

REGISTERED PROFESSIONAL ENGINEER
Gurinderpal Bhullar
No. C48815
Exp. 9-30-14
CIVIL
STATE OF CALIFORNIA

THE STATE OF CALIFORNIA OR ITS OFFICERS OR AGENTS SHALL NOT BE RESPONSIBLE FOR THE ACCURACY OR COMPLETENESS OF SCANNED COPIES OF THIS PLAN SHEET.

TO ACCOMPANY PLANS DATED 7-1-16

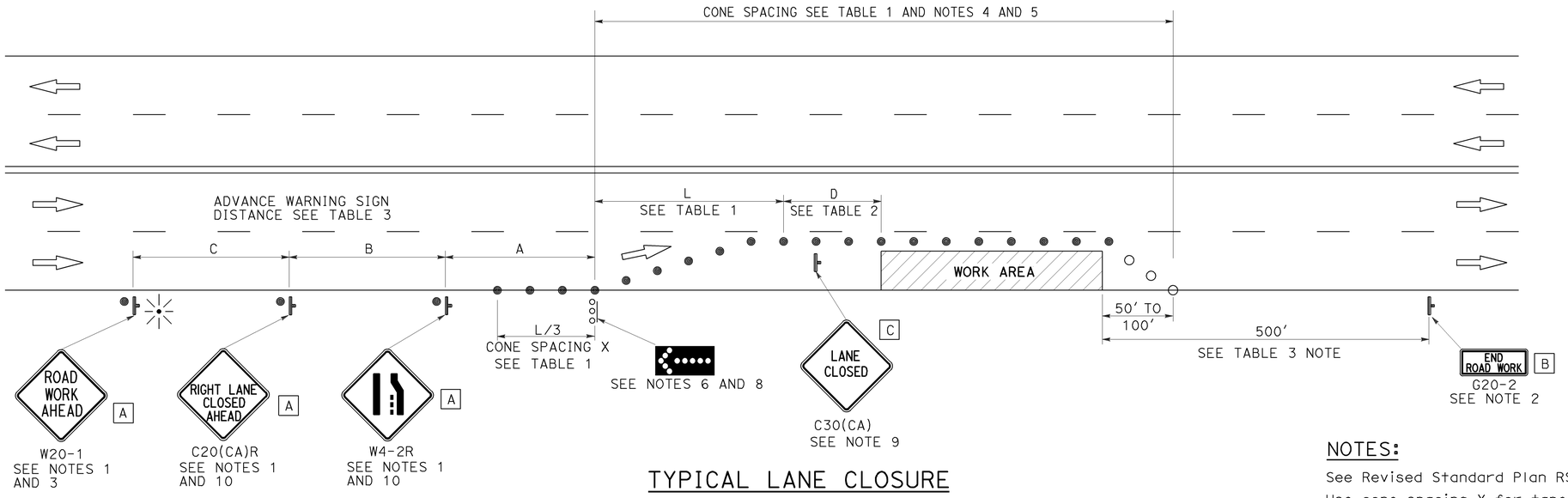

TYPICAL LANE CLOSURE

NOTES:

See Revised Standard Plan RSP T9 for tables.

Use cone spacing X for taper segment, Y for tangent segment or Z for conflict situations, as approriate, per Table 1, unless X, Y, or Z cone spacing is shown on this sheet.

Unless otherwise specified in the special provisions, all temporary warning signs shall have black legend on fluorescent orange background.

California codes are designated by (CA). Otherwise, Federal (MUTCD) codes are shown.

NOTES:

1. Each advance warning sign shall be equipped with at least two flags for daytime closure. Each flag shall be at least 16" x 16" in size and shall be orange or fluorescent red-orange in color. Flashing beacons shall be placed at the locations indicated for lane closure during hours of darkness.
2. A G20-2 "END ROAD WORK" sign, as appropriate, shall be placed at the end of the lane closure unless the end of work area is obvious, or ends within a larger project's limits.
3. If the W20-1 sign would follow within 2000' of a stationary W20-1 or G20-1 "ROAD WORK NEXT _____ MILES", use a C20(CA) sign for the first advance warning sign.
4. All cones used for lane closures during the hours of darkness shall be fitted with retroreflective bands (or sleeves) as specified in the specifications.
5. Portable delineators, placed at one-half the spacing indicated for traffic cones, may be used instead of cones for daytime closures only.
6. Flashing arrow sign shall be either Type I or Type II.
7. For approach speeds over 50 mph, use the "Traffic Control System for Lane Closure On Freeways And Expressways" plan for lane closure details and requirements.
8. A minimum 1500' of sight distance shall be provided where possible for vehicles approaching the first flashing arrow sign. Lane closures shall not begin at the top of crest vertical curve or on a horizontal curve.
9. Place a C30(CA) sign every 2000' throughout length of lane closure.
10. Median lane closures shall conform to the details as shown except that C20(CA)L and W4-2L signs shall be used.
11. At least one person shall be assigned to provide full time maintenance of traffic control devices for lane closure unless, otherwise directed by the Engineer.

LEGEND

- TRAFFIC CONE
- TRAFFIC CONE (OPTIONAL TAPER)
- TEMPORARY TRAFFIC CONTROL SIGN
- FLASHING ARROW SIGN (FAS)
- FAS SUPPORT OR TRAILER
- PORTABLE FLASHING BEACON

SIGN PANEL SIZE (Min)

A	48" x 48"
B	36" x 18"
C	30" x 30"

STATE OF CALIFORNIA
DEPARTMENT OF TRANSPORTATION

TRAFFIC CONTROL SYSTEM FOR LANE CLOSURE ON MULTILANE CONVENTIONAL HIGHWAYS

NO SCALE

RSP T11 DATED APRIL 19, 2013 SUPERSEDES STANDARD PLAN T11 DATED MAY 20, 2011 - PAGE 239 OF THE STANDARD PLANS BOOK DATED 2010.

REVISED STANDARD PLAN RSP T11

2010 REVISED STANDARD PLAN RSP T11

4-2-13

Dist	COUNTY	ROUTE	POST MILES TOTAL PROJECT	SHEET No.	TOTAL SHEETS
07	LA	105,110	R6.6/R8.0 13.2/14.7	75	93

REGISTERED CIVIL ENGINEER

April 19, 2013
PLANS APPROVAL DATE

REGISTERED PROFESSIONAL ENGINEER Gurinderpal Bhullar No. C48815 Exp. 9-30-14 CIVIL STATE OF CALIFORNIA

THE STATE OF CALIFORNIA OR ITS OFFICERS OR AGENTS SHALL NOT BE RESPONSIBLE FOR THE ACCURACY OR COMPLETENESS OF SCANNED COPIES OF THIS PLAN SHEET.

TO ACCOMPANY PLANS DATED 7-1-16

LEGEND

- TRAFFIC CONE
- TEMPORARY TRAFFIC CONTROL SIGN
- FLASHING ARROW SIGN (FAS)
- FAS SUPPORT OR TRAILER
- PORTABLE FLASHING BEACON

SIGN PANEL SIZE (Min)

- A 48" x 48"
- B 24" x 24"
- C 36" x 18"

NOTES:

See Revised Standard Plan RSP T9 for tables.

Use cone spacing X for taper segment, Y for tangent segment or Z for conflict situations, as approriate, per Table 1, unless X, Y, or Z cone spacing is shown on this sheet.

Unless otherwise specified in the special provisions, all temporary warning signs shall have black legend on fluorescent orange background.

California codes are designated by (CA). Otherwise, Federal (MUTCD) codes are shown.

TYPICAL HALF ROAD CLOSURE

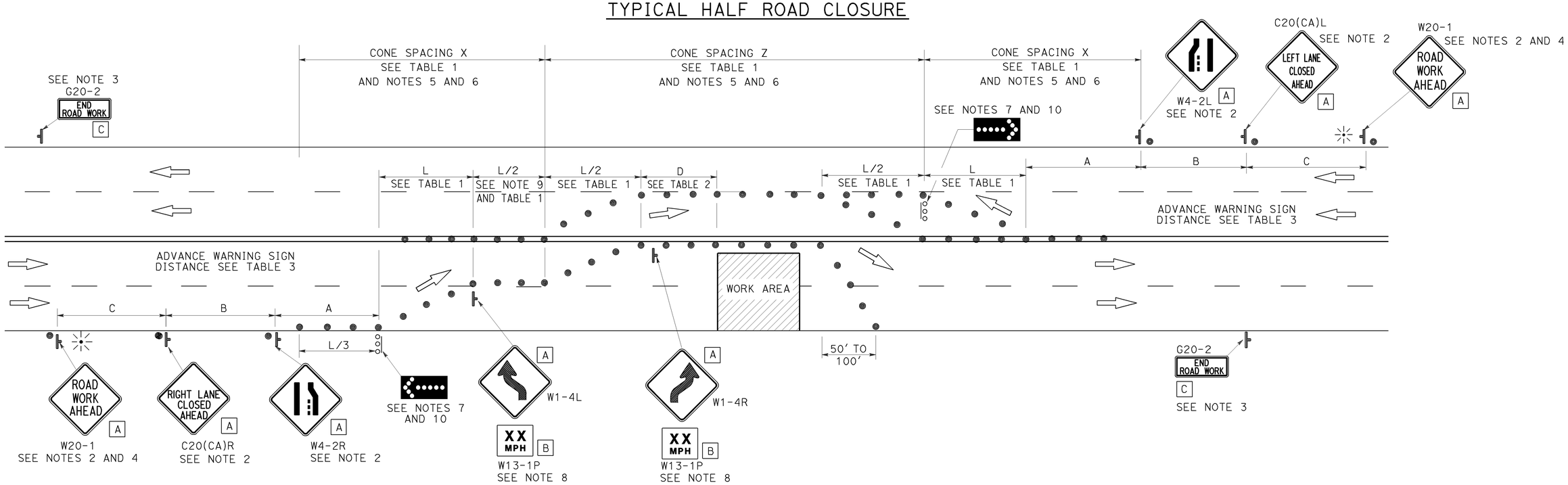

NOTES:

1. At least one person shall be assigned to provide full time maintenance of traffic control devices for lane closure unless, otherwise directed by the Engineer.
2. Each advance warning sign in each direction of travel shall be equipped with at least two flags for daytime closure. Each flag shall be at least 16" x 16" in size and shall be orange or fluorescent red-orange in color. Flashing beacons shall be placed at the locations indicated for lane closure during hours of darkness.
3. A G20-2 "END ROAD WORK" sign, as appropriate, shall be placed at the end of the lane closure unless the end of work area is obvious, or ends within a larger project's limits.
4. If the W20-1 sign would follow within 2000' of a stationary W20-1 or G20-1 "ROAD WORK NEXT _____ MILES", use a C20(CA) sign for the first advance warning sign.
5. All cones used for lane closures during the hours of darkness shall be fitted with retroreflective bands (or sleeves) as specified in the specifications.
6. Portable delineators, placed at one-half the spacing indicated for traffic cones, may be used instead of cones for daytime closures only.
7. Flashing arrow signs shall be either Type I or Type II.
8. Advisory speed will be determined by the Engineer. The W13-1P Plaque will not be required when advisory speed is more than the posted or maximum speed limit.
9. Unless otherwise specified in the special provisions, the tangent (L/2) shall be used.
10. A minimum 1500' of sight distance shall be provided where possible for vehicles approaching the first flashing arrow sign. Lane closures shall not begin at the top of crest vertical curve or on a horizontal curve.

STATE OF CALIFORNIA
DEPARTMENT OF TRANSPORTATION

TRAFFIC CONTROL SYSTEM FOR HALF ROAD CLOSURE ON MULTILANE CONVENTIONAL HIGHWAYS AND EXPRESSWAYS

NO SCALE

RSP T12 DATED APRIL 19, 2013 SUPERSEDES STANDARD PLAN T12
DATED MAY 20, 2011 - PAGE 240 OF THE STANDARD PLANS BOOK DATED 2010.

REVISED STANDARD PLAN RSP T12

2010 REVISED STANDARD PLAN RSP T12

4-2-13

Dist	COUNTY	ROUTE	POST MILES TOTAL PROJECT	SHEET No.	TOTAL SHEETS
07	LA	105,110	R6.6/R8.0 13.2/14.7	76	93

Devinder Singh
REGISTERED CIVIL ENGINEER

October 30, 2015
PLANS APPROVAL DATE

REGISTERED PROFESSIONAL ENGINEER Devinder Singh No. C50470 Exp. 6-30-17 CIVIL STATE OF CALIFORNIA

THE STATE OF CALIFORNIA OR ITS OFFICERS OR AGENTS SHALL NOT BE RESPONSIBLE FOR THE ACCURACY OR COMPLETENESS OF SCANNED COPIES OF THIS PLAN SHEET.

TO ACCOMPANY PLANS DATED 7-1-16

2010 REVISED STANDARD PLAN RSP T13

NOTES:

See Revised Standard Plan RSP T9 for tables.

Use cone spacing X for taper segment, Y for tangent segment or Z for conflict situations, as approriate, per Table 1, unless X, Y, or Z cone spacing is shown on this sheet.

Unless otherwise specified in the special provisions, all temporary warning signs shall have black legend on fluorescent orange background.

California codes are designated by (CA). Otherwise, Federal (MUTCD) codes are shown.

TYPICAL LANE CLOSURE WITH REVERSIBLE CONTROL

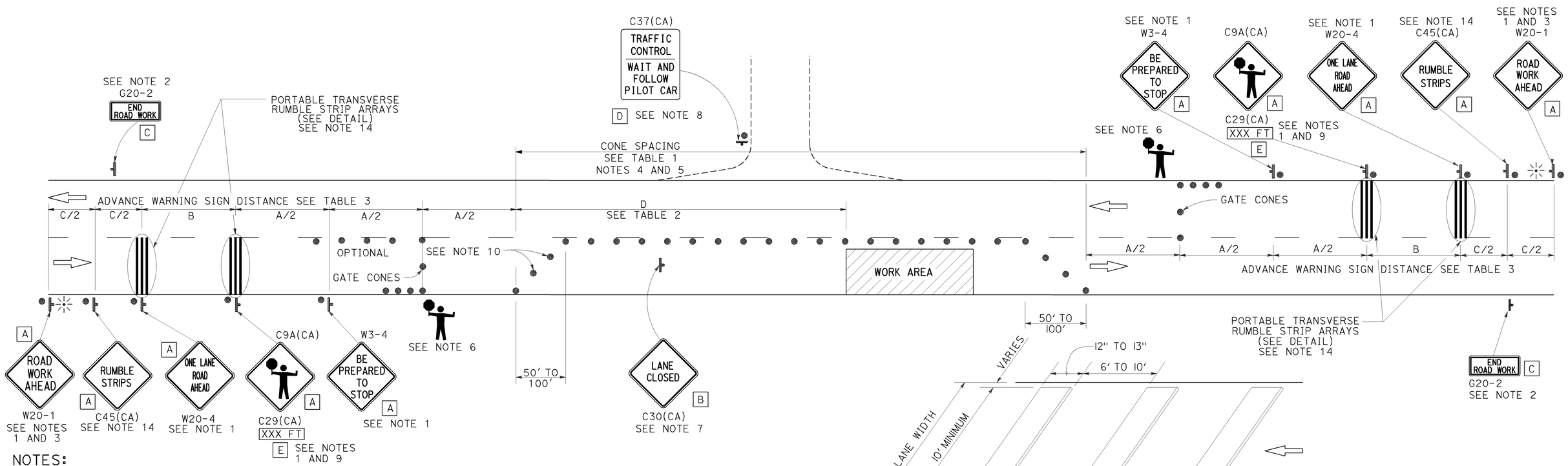

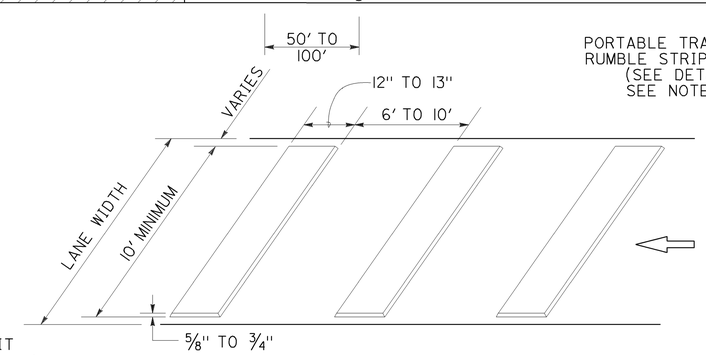

PORTABLE TRANSVERSE RUMBLE STRIP ARRAY DETAIL

NOTES:

1. Each advance warning sign in each direction of travel shall be equipped with at least two flags for daytime closure. Each flag shall be at least 16" x 16" in size and shall be orange or fluorescent red-orange in color. Flashing beacons shall be placed at the locations indicated for lane closure during hours of darkness.
2. A G20-2 "END ROAD WORK" sign, as appropriate, shall be placed at the end of the lane control unless the end of work area is obvious, or ends within a larger project's limits.
3. If the W20-1 sign would follow within 2000' of a stationary W20-1 or G20-1 "ROAD WORK NEXT _____ MILES", use a W20-4 sign for the first advance warning sign.
4. All cones used for lane closures during the hours of darkness shall be fitted with retroreflective bands (or sleeves) as specified in the specifications.
5. Portable delineators, placed at one-half the spacing indicated for traffic cones, may be used instead of cones for daytime closures only.
6. Additional advance flaggers may be required. Flagger should stand in a conspicuous place, be visible to approaching traffic as well as approaching vehicles after the first vehicle has stopped. During the hours of darkness, the flagging-station and flagger shall be illuminated and clearly visible to approaching traffic. The illumination footprint of the lighting on the ground shall be at least 20' in diameter. Place a minimum of four cones at 50' intervals in advance of flagger station as shown.
7. Place C30(CA) "LANE CLOSED" sign at 500' to 1000' intervals throughout extended work areas. They are optional if the work area is visible from the flagger station.
8. When a pilot car is used, place a C37(CA) "TRAFFIC CONTROL-WAIT AND FOLLOW PILOT CAR" sign with black legend on white background at all intersections, driveways and alleys without a flagger within traffic control area. Signs shall be clean and visible at all times. Where traffic can not be effectively self-regulated, at least one flagger shall be used at each intersection within traffic control area.
9. An optional C29(CA) sign may be placed below the C9A(CA) sign.
10. Either traffic cones or barricades shall be placed on the taper. Barricades shall be Type I, II, or III.
11. The color of the portable transverse rumble strips shall be black or orange. Use 2 arrays, each array shall consist of 3 rumble strips.
12. Portable transverse rumble strips shall not be placed on sharp horizontal or vertical curves nor shall they be placed through pedestrian crossings.
13. If the portable transverse rumble strips become out of alignment (skewed) by more than 6 inches, measured from one end to the other, they shall be readjusted to bring the placement back to the original location.
14. Portable transverse rumble strips are not required if any one of the following conditions is satisfied:
    A. Work duration occupies a location for four hours or less
    B. Posted speed limit is below 45 MPH
    C. Work is of emergency nature
    D. Work zone is in snow or icy weather conditions

SIGN PANEL SIZE (Min)

A	48" x 48"
B	30" x 30"
C	36" x 18"
D	36" x 42"
E	20" x 7"

LEGEND

- TRAFFIC CONE
- TEMPORARY TRAFFIC CONTROL SIGN
- PORTABLE FLASHING BEACON
- FLAGGER

STATE OF CALIFORNIA
DEPARTMENT OF TRANSPORTATION

TRAFFIC CONTROL SYSTEM FOR LANE CLOSURE ON TWO LANE CONVENTIONAL HIGHWAYS

NO SCALE

RSP T13 DATED OCTOBER 30, 2015 SUPERSEDES RSP T13 DATED OCTOBER 17, 2014, RSP T13 DATED JULY 18, 2014 AND RSP T13 DATED APRIL 19, 2013 AND STANDARD PLAN T13 DATED MAY 20, 2011 - PAGE 241 OF THE STANDARD PLANS BOOK DATED 2010.

REVISED STANDARD PLAN RSP T13

10-13-15

Dist	COUNTY	ROUTE	POST MILES TOTAL PROJECT	SHEET No.	TOTAL SHEETS
07	LA	105,110	R6.6/R8.0 13.2/14.7	77	93

REGISTERED CIVIL ENGINEER

April 19, 2013
PLANS APPROVAL DATE

REGISTERED PROFESSIONAL ENGINEER
Gurinderpal Bhullar
No. C48815
Exp. 9-30-14
CIVIL
STATE OF CALIFORNIA

THE STATE OF CALIFORNIA OR ITS OFFICERS OR AGENTS SHALL NOT BE RESPONSIBLE FOR THE ACCURACY OR COMPLETENESS OF SCANNED COPIES OF THIS PLAN SHEET.

TO ACCOMPANY PLANS DATED 7-1-16

TYPICAL RAMP CLOSURES

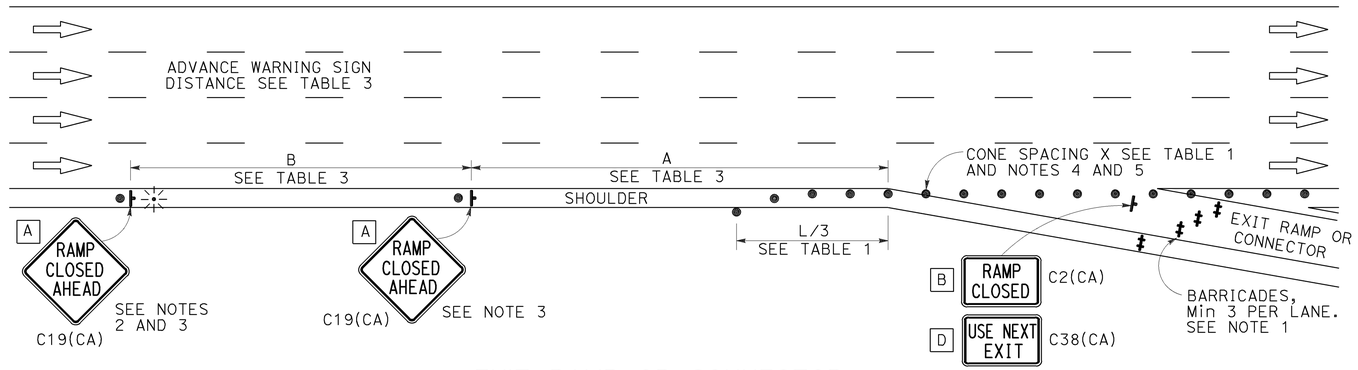

EXIT RAMP OR CONNECTOR

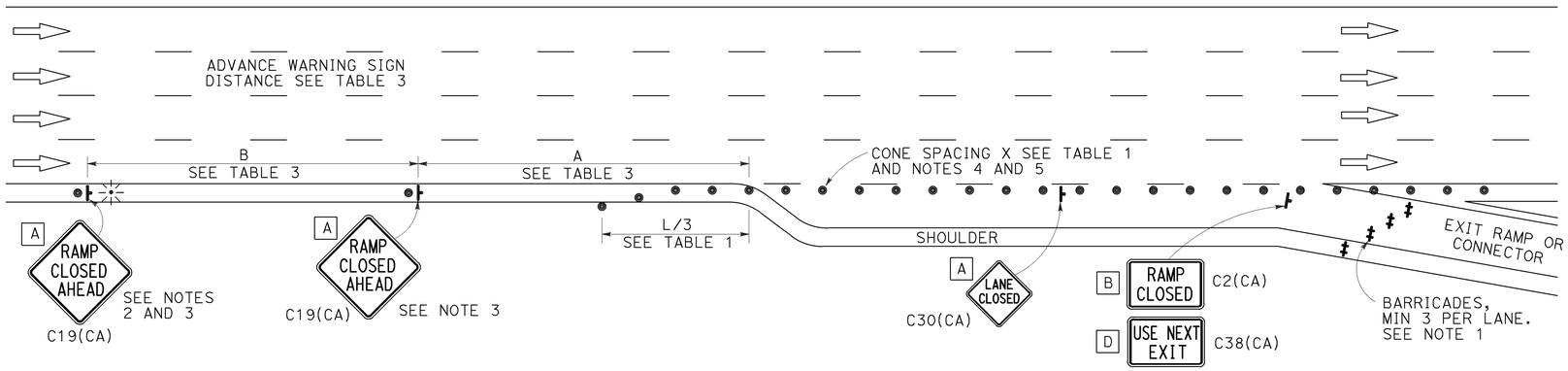

EXIT RAMP OR CONNECTOR WITH ADDITIONAL LANE

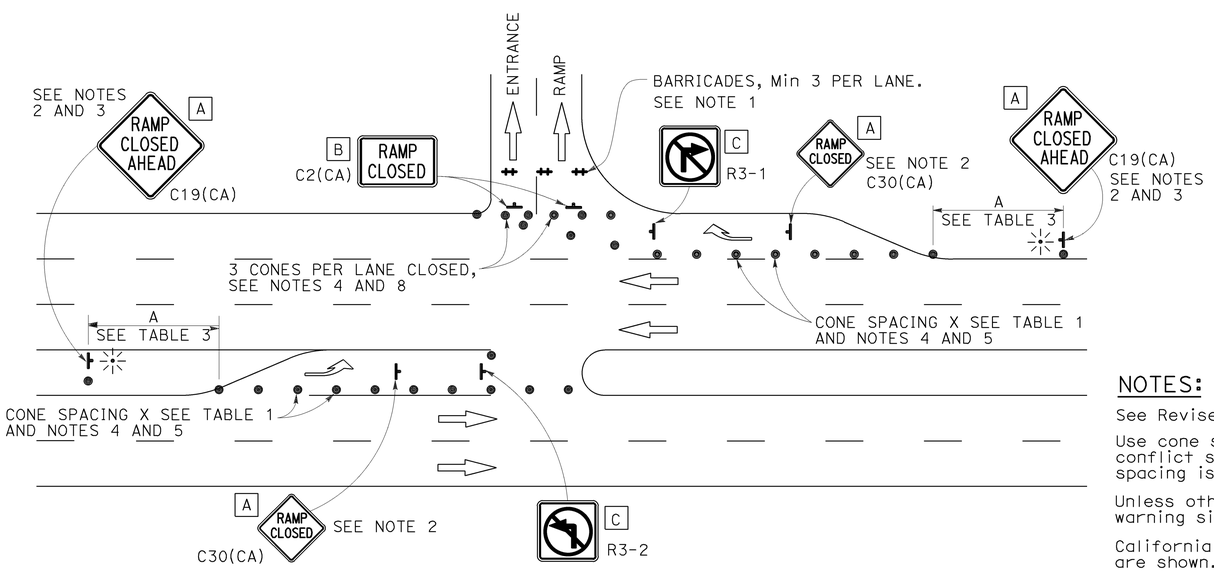

ENTRANCE RAMP WITH TURNING POCKETS

SIGN PANEL SIZE (Min)

- A 48" × 48"
- B 48" × 30"
- C 36" × 36"
- D 48" × 36"

LEGEND

- TRAFFIC CONE
- TEMPORARY TRAFFIC CONTROL SIGN
- BARRICADES
- PORTABLE FLASHING BEACON

NOTES:

1. Barricades shall be Type I, II, or III for closures lasting one week or less and Type III for closures lasting longer than one week.
2. In addition to placing the C19(CA) "RAMP CLOSED AHEAD" and C30(CA) "RAMP CLOSED" signs, black on orange overlay plates with the word "CLOSED" may be mounted, as directed by the Engineer, on all guide signs that refer to the closed ramp. The letter size on the overlay shall be the same as the guide sign.
3. Each advance C19(CA) "RAMP CLOSED AHEAD" sign shall be equipped with at least two flags for daytime closure. Each flag shall be at least 16" × 16" in size and shall be orange or fluorescent red-orange in color. A flashing beacon shall be placed on top of the first C19(CA) sign during hours of darkness.
4. All cones used for ramp closures during the hours of darkness shall be fitted with retroreflective bands (or sleeves) as specified in the specifications.
5. Portable delineators, placed at one-half the spacing indicated for traffic cones, may be used instead of cones for daytime ramp closures only.
6. At least one person shall be assigned to provide full time maintenance of traffic control devices, unless otherwise directed by the Engineer.
7. The existing "EXIT" signs shall be covered during ramp closures.
8. A minimum of 3 cones shall be placed transversely across each closed lane and shoulder.

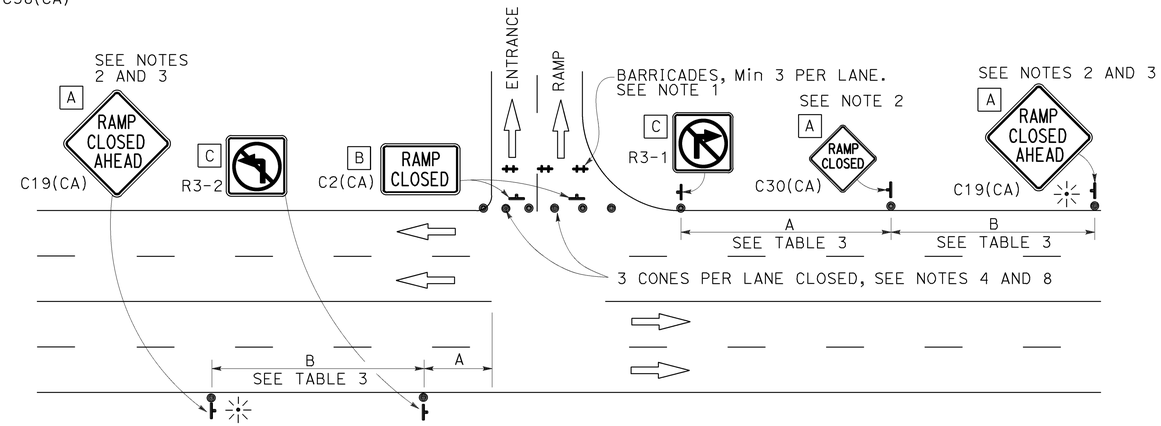

ENTRANCE RAMP WITHOUT TURNING POCKETS

NOTES:

See Revised Standard Plan RSP T9 for tables.

Use cone spacing X for taper segment, Y for tangent segment or Z for conflict situations, as approriate, per Table 1, unless X, Y, or Z cone spacing is shown on this sheet.

Unless otherwise specified in the special provisions, all temporary warning signs shall have black legend on fluorescent orange background.

California codes are designated by (CA). Otherwise, Federal (MUTCD) codes are shown.

STATE OF CALIFORNIA
DEPARTMENT OF TRANSPORTATION

TRAFFIC CONTROL SYSTEM FOR RAMP CLOSURE

NO SCALE

RSP T14 DATED APRIL 19, 2013 SUPERSEDES STANDARD PLAN T14
DATED MAY 20, 2011 - PAGE 242 OF THE STANDARD PLANS BOOK DATED 2010.

REVISED STANDARD PLAN RSP T14

2010 REVISED STANDARD PLAN RSP T14

12-18-12

Dist	COUNTY	ROUTE	POST MILES TOTAL PROJECT	SHEET No.	TOTAL SHEETS
07	LA	105,110	R6.6/R8.0 13.2/14.7	78	93

Theresa Gabriel
REGISTERED ELECTRICAL ENGINEER

October 30, 2015
PLANS APPROVAL DATE

REGISTERED PROFESSIONAL ENGINEER
Theresa Aziz Gabriel
No. E15129
Exp. 6-30-16
ELECTRICAL
STATE OF CALIFORNIA

THE STATE OF CALIFORNIA OR ITS OFFICERS OR AGENTS SHALL NOT BE RESPONSIBLE FOR THE ACCURACY OR COMPLETENESS OF SCANNED COPIES OF THIS PLAN SHEET.

TO ACCOMPANY PLANS DATED 7-1-16

LEGEND:

AB	ABANDON. IF APPLIED TO CONDUIT, REMOVE CONDUCTORS
BC	INSTALL PULL BOX IN EXISTING CONDUIT RUN
BP	PEDESTRIAN BARRICADE, TYPE AS INDICATED ON PLAN
CB	INSTALL CONDUIT INTO EXISTING PULL BOX
CC	CONNECT NEW AND EXISTING CONDUIT. REMOVE EXISTING CONDUCTORS AND INSTALL CONDUCTORS AS INDICATED
CF	CONDUIT TO REMAIN FOR FUTURE USE. REMOVE CONDUCTORS. INSTALL PULL TAPE
DH	DETECTOR HANDHOLE
FA	FOUNDATION TO BE ABANDONED
IS	INSTALL SIGN ON SIGNAL MAST ARM
NS	NO SLIP BASE ON STANDARD
PEC	PHOTOELECTRIC CONTROL
PEU	PHOTOELECTRIC UNIT
RC	EQUIPMENT OR MATERIAL TO BE REMOVED AND BECOME THE PROPERTY OF THE CONTRACTOR
RE	REMOVE ELECTROLIER, FUSES AND BALLAST. TAPE ENDS OF CONDUCTORS
RL	RELOCATE EQUIPMENT
RR	REMOVE AND REUSE EQUIPMENT
RS	REMOVE AND SALVAGE EQUIPMENT
SC	SPLICE NEW TO EXISTING CONDUCTORS
SD	SERVICE DISCONNECT
TSP	TELEPHONE SERVICE POINT

ABBREVIATIONS

AC+	UNDERGROUNDED CONDUCTOR
APS	ACCESSIBLE PEDESTRIAN SIGNAL
Batt	BATTERY
BBS	BATTERY BACKUP SYSTEM
BC	BOLT CIRCLE
Blk	BLACK
BP	BYPASS
BPB	BICYCLE PUSH BUTTON
C	CONDUIT
CB	CIRCUIT BREAKER
CCTV	CLOSED CIRCUIT TELEVISION
Ckt	CIRCUIT
CMS	CHANGEABLE MESSAGE SIGN
Ctid	CALTRANS IDENTIFICATION
Comm	COMMUNICATION
Cntl	CONTROL
DF	DEPARTMENT-FURNISHED
DLC	LOOP DETECTOR LEAD-IN CABLE
EMS	EXTINGUISHABLE MESSAGE SIGN
EVUC	EMERGENCY VEHICLE UNIT CABLE
EVUD	EMERGENCY VEHICLE UNIT DETECTOR
FB	FLASHING BEACON
FBCA	FLASHING BEACON CONTROL ASSEMBLY
FBS	FLASHING BEACON WITH SLIP BASE
FO	FIBER OPTIC
G	EQUIPMENT GROUNDING CONDUCTOR
GB	GROUND BUS
GFCI	GROUND FAULT CIRCUIT INTERRUPTER
Grn	GREEN
HAR	HIGHWAY ADVISORY RADIO
Hex	HEXAGONAL
HPS	HIGH PRESSURE SODIUM
IISNS	INTERNALLY ILLUMINATED STREET NAME SIGN
ISL	INDUCTION SIGN LIGHTING
LED	LIGHT EMITTING DIODE
LMA	LUMINAIRE MAST ARM
LPS	LOW PRESSURE SODIUM
Ltg	LIGHTING
Lum	LUMINAIRE
M	METERED
MAT	MAST ARM MOUNTING TOP ATTACHMENT
MAS	MAST ARM MOUNTING SIDE ATTACHMENT
MBPS	MANUAL BYPASS SWITCH
M/M	MULTIPLE TO MULTIPLE TRANSFORMER
Mtg	MOUNTING
MV	MERCURY VAPOR LIGHTING FIXTURE
MVDS	MICROWAVE VEHICLE DETECTION SYSTEM
N	NEUTRAL (GROUNDED CONDUCTOR)
NB	NEUTRAL BUS
NC	NORMALLY CLOSE
NO	NORMALLY OPEN
P	CIRCUIT BREAKER'S POLE
PB	PULL BOX
PBA	PUSH BUTTON ASSEMBLY
PEC	PHOTOELECTRIC CONTROL
Ped	PEDESTRIAN
PEU	PHOTOELECTRIC UNIT
PT	CONDUIT WITH PULL TAPE
PTR	POWER TRANSFER RELAY
RE	RELOCATED EQUIPMENT
RM	RAMP METERING
RWIS	ROADSIDE WEATHER INFORMATION SYSTEM
SB	SLIP BASE
SIC	SIGNAL INTERCONNECT CABLE
Sig	SIGNAL
SMA	SIGNAL MAST ARM
SNS	STREET NAME SIGN
SP	SERVICE POINT
TB	TERMINAL BOARD
TDC	TELEPHONE DEMARCATION CABINET
Temp	TEMPERATURE
TMS	TRAFFIC MONITORING STATION
TOS	TRAFFIC OPERATIONS SYSTEM
UPS	UNINTERRUPTABLE POWER SUPPLY
UPSC	UNINTERRUPTABLE POWER SUPPLY CONTROLLER
Veh	VEHICLE
VIVDS	VIDEO IMAGE VEHICLE DETECTION SYSTEM
Wht	WHITE
WIM	WEIGH-IN-MOTION
Xfmr	TRANSFORMER

SOFFIT AND WALL-MOUNTED LUMINAIRES

- PENDANT SOFFIT LUMINAIRE, 70 W HPS UNLESS OTHERWISE SPECIFIED
- FLUSH-MOUNTED SOFFIT LUMINAIRE, 70 W HPS UNLESS OTHERWISE SPECIFIED
- WALL-MOUNTED LUMINAIRE, 70 W HPS UNLESS OTHERWISE SPECIFIED
- EXISTING SOFFIT OR WALL-MOUNTED LUMINAIRE TO REMAIN UNMODIFIED
- (M) EXISTING SOFFIT OR WALL-MOUNTED LUMINAIRE TO BE MODIFIED AS SPECIFIED

NOTE:
Arrow indicates "street side" of luminaire.

COMMONLY USED SYMBOLS FOR UNITED STATES CUSTOMARY UNITS OF MEASUREMENT:

SYMBOL	DEFINITIONS
Ω	OHMS
min	MINUTE
s	SECOND
bps	BITS PER SECOND
Bps	BYTES PER SECOND
A	AMPERE
V	VOLT
V(dc)	VOLT (DIRECT CURRENT)
V(ac)	VOLT (ALTERNATING CURRENT)
FC	FOOT - CANDLE
W	WATTS
VA	VOLT-AMPERE
M	MEGA
k	KILO
m	MILLI
μ	MICRO
P	PICO
Hz	HERTZ

MISCELLANEOUS ELECTROLIERS

NEW	EXISTING	
		LUMINAIRE ON WOOD POLE
		NON-STANDARD ELECTROLIER (SEE PROJECT LEGEND)
		CITY ELECTROLIER
		ELECTROLIER FOUNDATION (FUTURE INSTALLATION)

NOTES:

1. LED luminaires shall be 235 W when installed on Type 21, 21D, 30, 31 and 32 Standards, unless otherwise specified. LED luminaires shall be 165 W when installed on other type standards or poles, unless otherwise specified.
2. Luminaires shall be the cutoff type, ANSI Type III medium cutoff lighting distribution, unless otherwise specified.

STANDARD ELECTROLIER

NEW	EXISTING	STANDARD TYPE
		15
		15D
		15 STRUCTURE
		15D STRUCTURE
		21
		21D
		21 STRUCTURE
		21D STRUCTURE
		30
		31
		32

STATE OF CALIFORNIA
DEPARTMENT OF TRANSPORTATION

ELECTRICAL SYSTEMS (LEGEND AND ABBREVIATIONS)

NO SCALE

RSP ES-1A DATED OCTOBER 30, 2015 SUPERSEDES RSP ES-1A DATED JULY 19, 2013 AND STANDARD PLAN ES-1A DATED MAY 20, 2011 - PAGE 425 OF THE STANDARD PLANS BOOK DATED 2010.

REVISED STANDARD PLAN RSP ES-1A

2010 REVISED STANDARD PLAN RSP ES-1A

9-29-15

Dist	COUNTY	ROUTE	POST MILES TOTAL PROJECT	SHEET No.	TOTAL SHEETS
07	LA	105,110	R6.6/R8.0 13.2/14.7	79	93

Theresa Gabriel
REGISTERED ELECTRICAL ENGINEER

October 30, 2015
PLANS APPROVAL DATE

REGISTERED PROFESSIONAL ENGINEER Theresa Aziz Gabriel No. E15129 Exp. 6-30-16 ELECTRICAL STATE OF CALIFORNIA

THE STATE OF CALIFORNIA OR ITS OFFICERS OR AGENTS SHALL NOT BE RESPONSIBLE FOR THE ACCURACY OR COMPLETENESS OF SCANNED COPIES OF THIS PLAN SHEET.

TO ACCOMPANY PLANS DATED 7-1-16

CONDUIT

NEW	EXISTING	
		LIGHTING CONDUIT, UNLESS OTHERWISE INDICATED OR NOTED
		TRAFFIC SIGNAL CONDUIT
C	c	COMMUNICATION CONDUIT
T	t	TELEPHONE CONDUIT
F	f	FIRE ALARM CONDUIT
FO	fo	FIBER OPTIC CONDUIT
		CONDUIT TERMINATION
R	r	CONDUIT RISER ATTACHED TO THE STRUCTURE OR SERVICE POLE

SERVICE EQUIPMENT

NEW	EXISTING	
OH	oh	OVERHEAD LINES
U	U	WOOD POLE, "U" INDICATES UTILITY OWNED
		POLE GUY WITH ANCHOR
		UTILITY TRANSFORMER - GROUND MOUNTED
III	III	SERVICE EQUIPMENT ENCLOSURE TYPE. DOOR INDICATES FRONT OF ENCLOSURE
T	t	TELEPHONE DEMARCATION CABINET

POLE-MOUNTED SERVICE DESIGNATION

TYPE H SERVICE, 28'-10" — TYPE OF INSTALLATION AND POLE HEIGHT ABOVE GRADE

FLASHING BEACON

NEW	EXISTING	
R	R	FLASHING BEACON (ONE VEHICLE SIGNAL HEAD WITH BACKPLATE AND VISOR) "R" INDICATES RED INDICATION, "Y" INDICATES YELLOW INDICATION
Y Y	Y Y	FLASHING BEACON WITH TYPE 15-FBS STANDARD AND A SIGN.
R R	R R	FLASHING BEACON WITH TYPES 9, 9A OR 9B SIGN UNLESS OTHERWISE SPECIFIED OR INDICATED

SIGNAL EQUIPMENT

NEW	EXISTING	
		PEDESTRIAN SIGNAL HEAD
		PUSH BUTTON ASSEMBLY POST
		PEDESTRIAN BARRICADE
		VEHICLE SIGNAL HEAD (WITH BACKPLATE AND 3-SECTIONS: RED, YELLOW AND GREEN)
		VEHICLE SIGNAL HEAD WITH ANGLE VISOR
PV	PV	MODIFICATIONS OF BASIC SYMBOL: "L" INDICATES ALL NON-ARROW SECTIONS LOUVERED "LG" INDICATES LOUVERED GREEN SECTION ONLY "PV" INDICATES ALL 12" SECTIONS PROGRAMMED VISIBILITY "8" INDICATES ALL 8" SECTIONS (ONLY WHEN SPECIFIED)
		VEHICLE SIGNAL HEAD CONSISTING OF RED, YELLOW AND GREEN LEFT ARROW SECTIONS
		VEHICLE SIGNAL HEAD CONSISTING OF RED AND YELLOW SECTIONS WITH AN UP GREEN ARROW SECTION
		VEHICLE SIGNAL HEAD (5 SECTION) CONSISTING OF RED, YELLOW AND GREEN SECTIONS WITH YELLOW AND GREEN RIGHT ARROW SECTIONS
		TYPE 15TS STANDARD WITH VEHICLE SIGNAL HEAD AND LUMINAIRE
		TYPE 21TS STANDARD WITH VEHICLE SIGNAL HEAD AND LUMINAIRE
		STANDARD WITH LUMINAIRE AND SIGNAL MAST ARMS AND ATTACHED VEHICLE SIGNAL HEADS
		TYPE 1 STANDARD WITH ATTACHED VEHICLE SIGNAL HEADS
		STANDARD WITH A SIGNAL MAST ARM, ATTACHED VEHICLE SIGNAL HEADS AND INTERNALLY ILLUMINATED STREET NAME SIGN
		CONTROLLER ASSEMBLY. DOOR INDICATES FRONT OF CABINET

SIGNAL EQUIPMENT Cont

NEW	EXISTING	
		GUARD POST
		TYPE 1 STANDARD WITH RAMP METERING SIGN
		OPTICAL DETECTOR FOR THE EMERGENCY VEHICLE DETECTION

NOTES:

1. All signal sections shall be 12" unless shown otherwise.
2. Signal heads shall be provided with backplates unless shown otherwise.

ILLUMINATED OVERHEAD SIGN

NEW	EXISTING	
		SINGLE POST, SINGLE ILLUMINATED SIGN, BALANCED BUTTERFLY
		SINGLE POST, DOUBLE ILLUMINATED SIGN, BALANCED BUTTERFLY
		SINGLE POST, SINGLE ILLUMINATED SIGN, FULL CANTILEVER
		DOUBLE POST, SINGLE ILLUMINATED SIGN
		SINGLE ILLUMINATED SIGN MOUNTED ON STRUCTURE
		DOUBLE POST, SINGLE ILLUMINATED SIGN WITH ELECTROLIER

STATE OF CALIFORNIA
DEPARTMENT OF TRANSPORTATION

ELECTRICAL SYSTEMS (LEGEND AND ABBREVIATIONS)

NO SCALE

RSP ES-1B DATED OCTOBER 30, 2015 SUPERSEDES RSP ES-1B DATED JULY 19, 2013 AND STANDARD PLAN ES-1B DATED MAY 20, 2011 - PAGE 426 OF THE STANDARD PLANS BOOK DATED 2010.

REVISED STANDARD PLAN RSP ES-1B

2010 REVISED STANDARD PLAN RSP ES-1B

8-19-15

Dist	COUNTY	ROUTE	POST MILES TOTAL PROJECT	SHEET No.	TOTAL SHEETS
07	LA	105,110	R6.6/R8.0 13.2/14.7	80	93

Theresa Gabriel
REGISTERED ELECTRICAL ENGINEER

April 15, 2016
PLANS APPROVAL DATE

REGISTERED PROFESSIONAL ENGINEER
Theresa Aziz Gabriel
No. E15129
Exp. 6-30-16
ELECTRICAL
STATE OF CALIFORNIA

THE STATE OF CALIFORNIA OR ITS OFFICERS OR AGENTS SHALL NOT BE RESPONSIBLE FOR THE ACCURACY OR COMPLETENESS OF SCANNED COPIES OF THIS PLAN SHEET.

TO ACCOMPANY PLANS DATED 7-1-16

2010 REVISED STANDARD PLAN RSP ES-1C

EQUIPMENT IDENTIFICATION

ILLUMINATED SIGN IDENTIFICATION:

SIGN No. 12345
10 ISL SCI 1.0

- SIGN EQUIPMENT IDENTIFICATION CHARACTERS - PLACE ON POST OR STRUCTURE
- TRANSFORMER RATING (kVA)
- LIGHTING CONTROL TYPE
- NUMBER AND TYPE OF FIXTURES

} DO NOT PLACE ON STANDARD OR STRUCTURE

ELECTROLIER OR EQUIPMENT IDENTIFICATION:

L2745 - 15'-0"

- MAST ARM LENGTH, IF SHOWN. DO NOT PLACE ON STANDARD OR STRUCTURE
- EQUIPMENT IDENTIFICATION CHARACTERS - PLACE ON STANDARD OR STRUCTURE. EXISTING EQUIPMENT IDENTIFICATION CHARACTERS ARE SHOWN IN PARENTHESIS

CONDUIT AND CONDUCTOR IDENTIFICATION:

1½"C, 2#10, 15#14, 2 DLC, 12P#18 (PAIR)

- NUMBER AND SIZE OF CONDUCTORS AND CABLES
- SIZE OF CONDUIT IN INCHES

ø1, ø2, ø2P, etc.	TRAFFIC PHASE IDENTIFICATION FOR SIGNALS, DETECTORS AND PHASE DIAGRAMS
1 2 3	LEGEND NUMBERS
A B C	EQUIPMENT, SIGNAL POLES, INSTALLATION OR ITEMS
1 2 3	CONDUIT RUN NUMBERS

SIGNAL AND LIGHTING STANDARD (TYPICAL DESIGNATION):

19A - 3 - 100

- WIND VELOCITY = 100 mph
- CASE 3 ARM LOADING
- STANDARD TYPE
- STANDARD PLAN SHEET NUMBER
- DETAIL, NUMBER, SECTION, TYPE OR ELEVATION

MISCELLANEOUS EQUIPMENT

NEW	EXISTING	
CMS	cms	CHANGEABLE MESSAGE SIGN
		CLOSED CIRCUIT TELEVISION CAMERA
		HIGHWAY ADVISORY RADIO POLE AND ANTENNA
EMS	ems	LED EXTINGUISHABLE MESSAGE SIGN
M V	m v	DETECTION DEVICE M = MICROWAVE SENSOR V = VIDEO IMAGE SENSOR

WIRING DIAGRAM LEGEND

- EXTERNAL CONDUCTOR
- CONDUCTOR OR BUS
- TIE POINT
- CONTACTOR COIL
- CONTACTOR, NO CONTACT
- TERMINAL BLOCKS
- CONTACTOR, NC CONTACT
- ENCLOSURE BOND
- GROUNDING ELECTRODE
- CIRCUIT BREAKER
- RECEPTACLE

PULL BOXES

NEW	EXISTING	
		PULL BOX, No. 5 UNLESS OTHERWISE INDICATED OR NOTED
3	9A(21)	PULL BOX, ADDITIONAL DESIGNATIONS OR DESCRIPTIONS

3 No. 3½ PULL BOX
5 No. 5 PULL BOX
6 No. 6 PULL BOX
7 No. 7 PULL BOX (CEILING)
8 No. 8 PULL BOX
9 No. 9 PULL BOX (STRUCTURE)
9A No. 9A PULL BOX (STRUCTURE)

(C) COMMUNICATIONS PULL BOX
(E) PULL BOX WITH EXTENSION
(S) SPRINKLER CONTROL PULL BOX
(21) ANCHOR BOLTS AND CONDUIT FOR FUTURE INSTALLATION OF TYPE 21 STANDARD
(T) TRAFFIC PULL BOX

VEHICLE DETECTORS

5 J 9 U

- VEHICLE DETECTOR DESIGNATION
- U = UPPER
  L = LOWER
- SLOT NUMBER IN INPUT FILE
- INPUT FILE (I OR J)
- PHASE

NEW	EXISTING	
		TYPE A LOOP DETECTOR. OUTLINE OF SAW CUT SHOWN
		TYPE B LOOP DETECTOR. OUTLINE OF SAW CUT SHOWN
		TYPE C LOOP DETECTOR. OUTLINE OF SAW CUT SHOWN
		TYPE D LOOP DETECTOR. OUTLINE OF SAW CUT SHOWN
		TYPE E LOOP DETECTOR. OUTLINE OF SAW CUT SHOWN
		TYPE Q LOOP DETECTOR. OUTLINE OF SAW CUT SHOWN
DH	dh	DETECTOR HANDHOLE
		MICROWAVE OR VIDEO DETECTION ZONE

STATE OF CALIFORNIA
DEPARTMENT OF TRANSPORTATION

ELECTRICAL SYSTEMS (LEGEND AND ABBREVIATIONS)

NO SCALE

RSP ES-1C DATED APRIL 15, 2016 SUPERSEDES RSP ES-1C DATED OCTOBER 30, 2015 AND RSP ES-1C DATED JULY 19, 2013 AND STANDARD PLAN ES-1C DATED MAY 20, 2011 - PAGE 427 OF THE STANDARD PLANS BOOK DATED 2010.

REVISED STANDARD PLAN RSP ES-1C

Dist	COUNTY	ROUTE	POST MILES TOTAL PROJECT	SHEET No.	TOTAL SHEETS
07	LA	105,110	R6.6/R8.0 13.2/14.7	81	93

Theresa Gabriel
REGISTERED ELECTRICAL ENGINEER

October 30, 2015
PLANS APPROVAL DATE

REGISTERED PROFESSIONAL ENGINEER Theresa Aziz Gabriel No. E15129 Exp. 6-30-16 ELECTRICAL STATE OF CALIFORNIA

THE STATE OF CALIFORNIA OR ITS OFFICERS OR AGENTS SHALL NOT BE RESPONSIBLE FOR THE ACCURACY OR COMPLETENESS OF SCANNED COPIES OF THIS PLAN SHEET.

TO ACCOMPANY PLANS DATED 7-1-16

2010 REVISED STANDARD PLAN RSP ES-2A

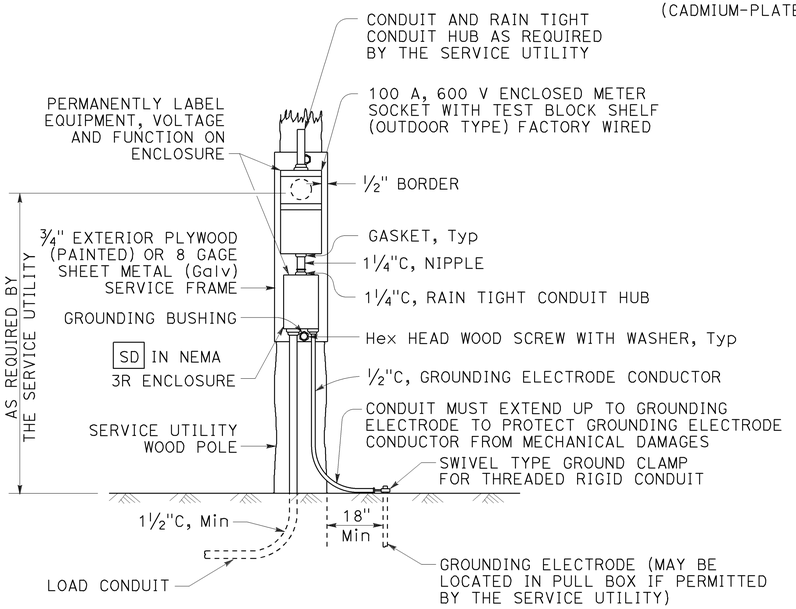

TYPE SCE-1
DETAIL A

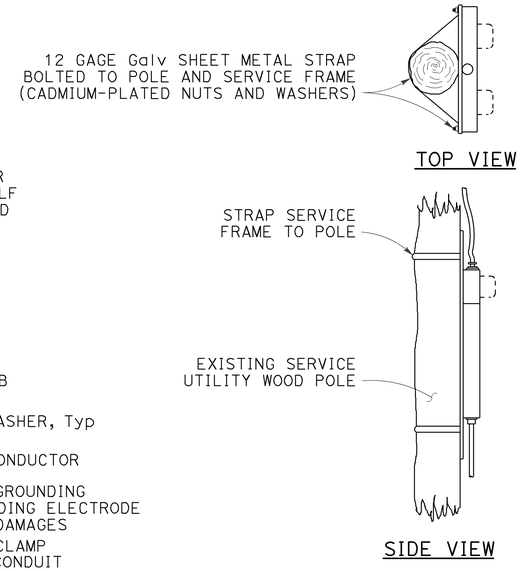

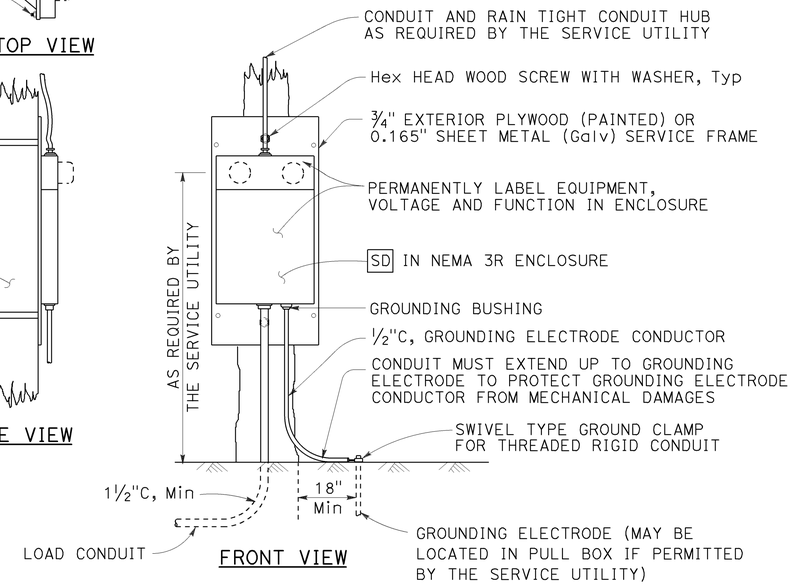

TYPE SCE-2
DETAIL B

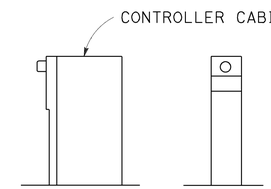

TYPE OF SERVICE (TYPICAL)
DETAIL C

See Notes 1 and 2

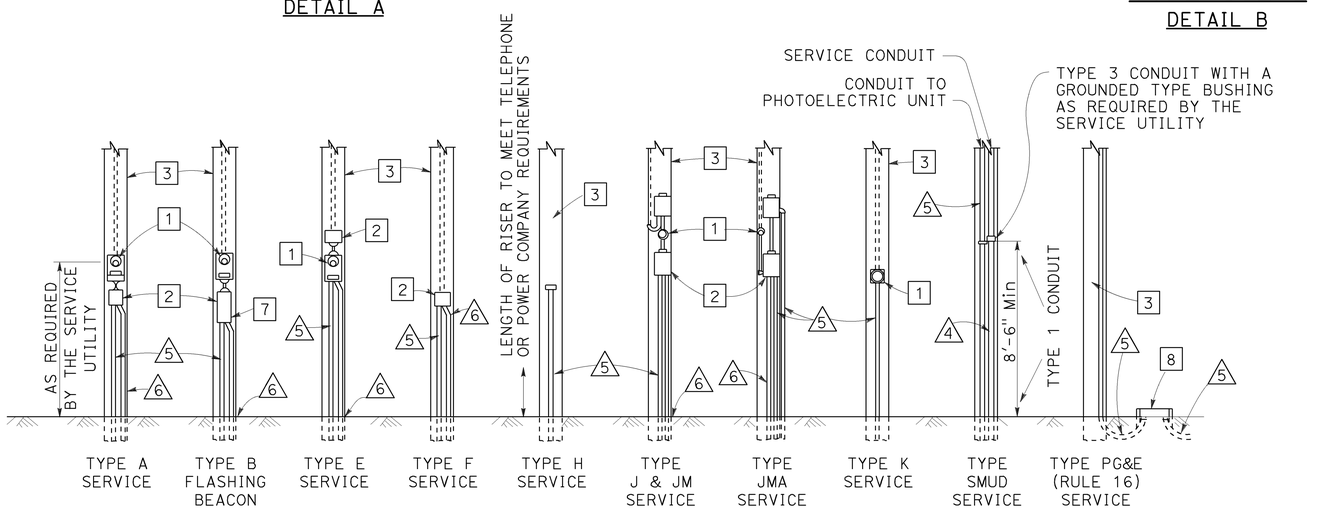

POLE MOUNTED SERVICE INSTALLATIONS
DETAIL D

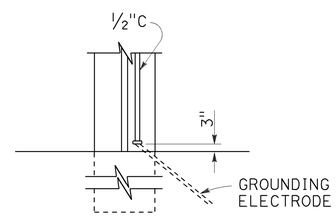

TYPE A
See Note 3

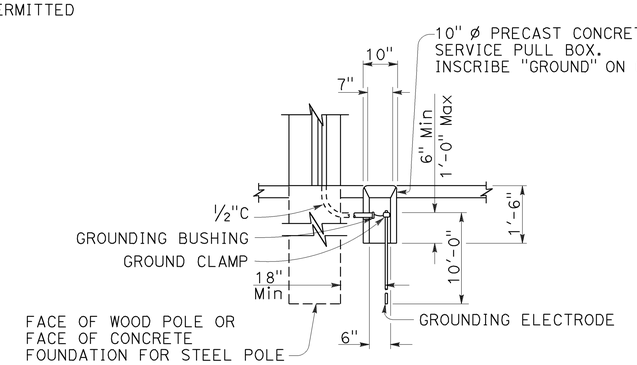

TYPE B
See Note 4

SERVICE GROUNDING
DETAIL E

LEGEND:

1. METER SOCKET.
2. SERVICE ENCLOSURE WITH A MINIMUM 60 A RATED MAIN CIRCUIT BREAKER, UNLESS OTHERWISE SHOWN.
3. A. UTILITY OWNED POLE. THE SERVICE UTILITY WILL FURNISH AND INSTALL REQUIRED SERVICE RISER, PEU WITH CONDUCTORS AND OTHER EQUIPMENT AS NEEDED.
   B. STATE OWNED POLE. THE CONTRACTOR SHALL FURNISH AND INSTALL REQUIRED SERVICE RISER AND EQUIPMENT.
4. 2"C, SERVICE CONDUIT MUST HAVE A GROUNDED TYPE BUSHING INSTALLED AT UPPER END OF THE METALLIC POLE RISER CONDUIT. A GROUNDING CONDUCTOR MUST BE ATTACHED TO THE BUSHING, CARRIED THROUGH THE CONDUIT RUN AND ATTACHED TO THE SERVICE EQUIPMENT ENCLOSURE'S GROUNDING ELECTRODE.
5. CONDUIT, LENGTH AND SIZE AS REQUIRED.
6. ½"C, 1#6. SEE DETAIL E.
7. FLASHING BEACON CONTROL ASSEMBLY.
8. SERVICE PULL BOX, No. 5 UNLESS OTHERWISE NOTED, FURNISHED AND INSTALLED BY THE CONTRACTOR. SERVICE UTILITY SHALL DETERMINE THE EXACT LOCATION.

NOTES:

1. Type II service equipment enclosure mounted on the side of a controller cabinet.
2. Type III complete free-standing service equipment enclosure.
3. Ground clamp and required fittings must be accessible. Conduit must extend to protect grounding electrode conductor from mechanical damage.
4. Use where service utility requires 18" clearance between grounding electrode and the pole or service equipment enclosure. Installation shown is for sidewalk or paved areas. In unpaved areas, omit special service pull box and locate ground clamp above ground or locate ground clamp in nearest pull box.

STATE OF CALIFORNIA
DEPARTMENT OF TRANSPORTATION

ELECTRICAL SYSTEMS (SERVICE EQUIPMENT)

NO SCALE

RSP ES-2A DATED OCTOBER 30, 2015 SUPERSEDES STANDARD PLAN ES-2A DATED MAY 20, 2011 - PAGE 428 OF THE STANDARD PLANS BOOK DATED 2010.

REVISED STANDARD PLAN RSP ES-2A

8-20-15

Dist	COUNTY	ROUTE	POST MILES TOTAL PROJECT	SHEET No.	TOTAL SHEETS
07	LA	105,110	R6.6/R8.0 13.2/14.7	82	93

Theresa Gabriel
REGISTERED ELECTRICAL ENGINEER

October 30, 2015
PLANS APPROVAL DATE

REGISTERED PROFESSIONAL ENGINEER
Theresa Aziz Gabriel
No. E15129
Exp. 6-30-16
ELECTRICAL
STATE OF CALIFORNIA

THE STATE OF CALIFORNIA OR ITS OFFICERS OR AGENTS SHALL NOT BE RESPONSIBLE FOR THE ACCURACY OR COMPLETENESS OF SCANNED COPIES OF THIS PLAN SHEET.

TO ACCOMPANY PLANS DATED 7-1-16

2010 REVISED STANDARD PLAN RSP ES-2C

NOTES:

1. The plan shows the approximate location of devices within the enclosure. Components may be rearranged, however, the "working" clearances within the service equipment enclosure shall be maintained.

2. In unpaved areas a raised portland cement concrete pad 2'-0" x 4" x width of foundation shall be constructed in front of new service equipment enclosure installation. Pad shall be set to elevation of foundation.

3. Plug-in circuit breakers may be mounted in the vertical or horizontal position. Cable-in/cable-out circuit breakers shall be mounted in the vertical position.

4. Type III-AF and Type III-BF service equipment enclosures shall have the meter viewing windows located on the front side of the service equipment enclosures.

5. Type III-AR and Type III-BR service equipment enclosure shall be similarly constructed as Type III-AF and Type III-BF respectively, except the meter viewing windows shall be located on the back side of the service equipment enclosures.

STATE OF CALIFORNIA
DEPARTMENT OF TRANSPORTATION

ELECTRICAL SYSTEMS (SERVICE EQUIPMENT ENCLOSURE NOTES TYPE III SERIES)

NO SCALE

RSP ES-2C DATED OCTOBER 30, 2015 SUPERSEDES STANDARD PLAN ES-2C DATED MAY 20, 2011 - PAGE 430 OF THE STANDARD PLANS BOOK DATED 2010.

REVISED STANDARD PLAN RSP ES-2C

Dist	COUNTY	ROUTE	POST MILES TOTAL PROJECT	SHEET No.	TOTAL SHEETS
07	LA	105,110	R6.6/R8.0 13.2/14.7	83	93

Theresa Gabriel
REGISTERED ELECTRICAL ENGINEER

October 30, 2015
PLANS APPROVAL DATE

REGISTERED PROFESSIONAL ENGINEER Theresa Aziz Gabriel No. E15129 Exp. 6-30-16 ELECTRICAL STATE OF CALIFORNIA

THE STATE OF CALIFORNIA OR ITS OFFICERS OR AGENTS SHALL NOT BE RESPONSIBLE FOR THE ACCURACY OR COMPLETENESS OF SCANNED COPIES OF THIS PLAN SHEET.

TO ACCOMPANY PLANS DATED 7-1-16

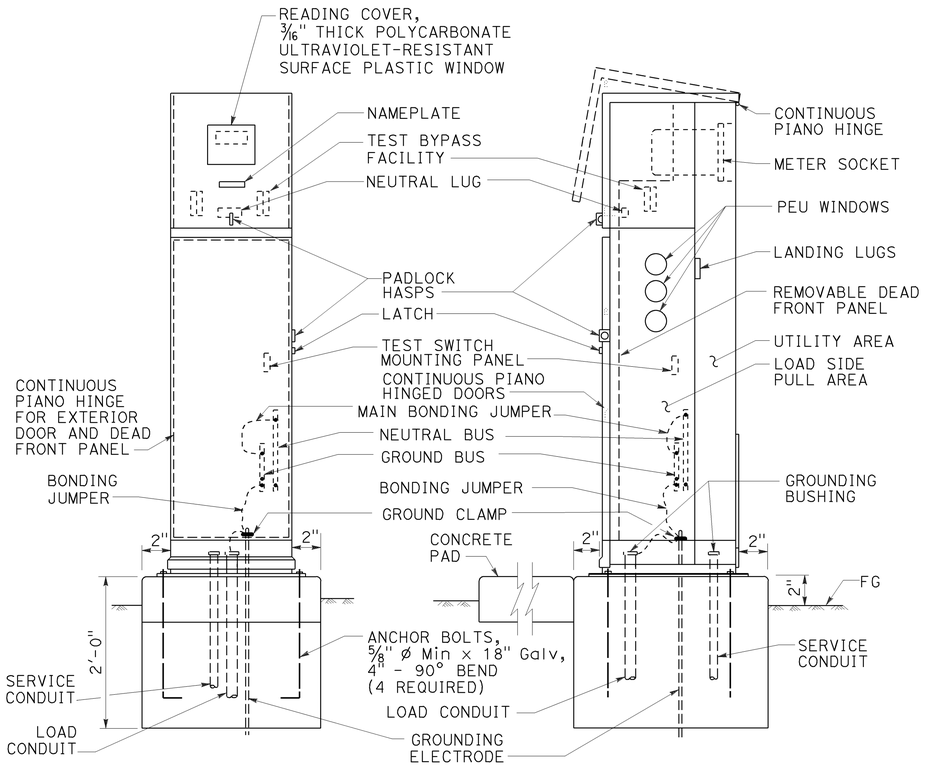

TYPE III-BF SERVICE EQUIPMENT ENCLOSURE (TYPICAL)

DETAIL A

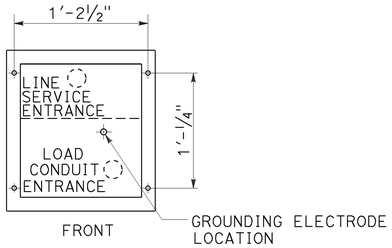

BASE FOR TYPE III-B SERVICE EQUIPMENT ENCLOSURE

DETAIL B

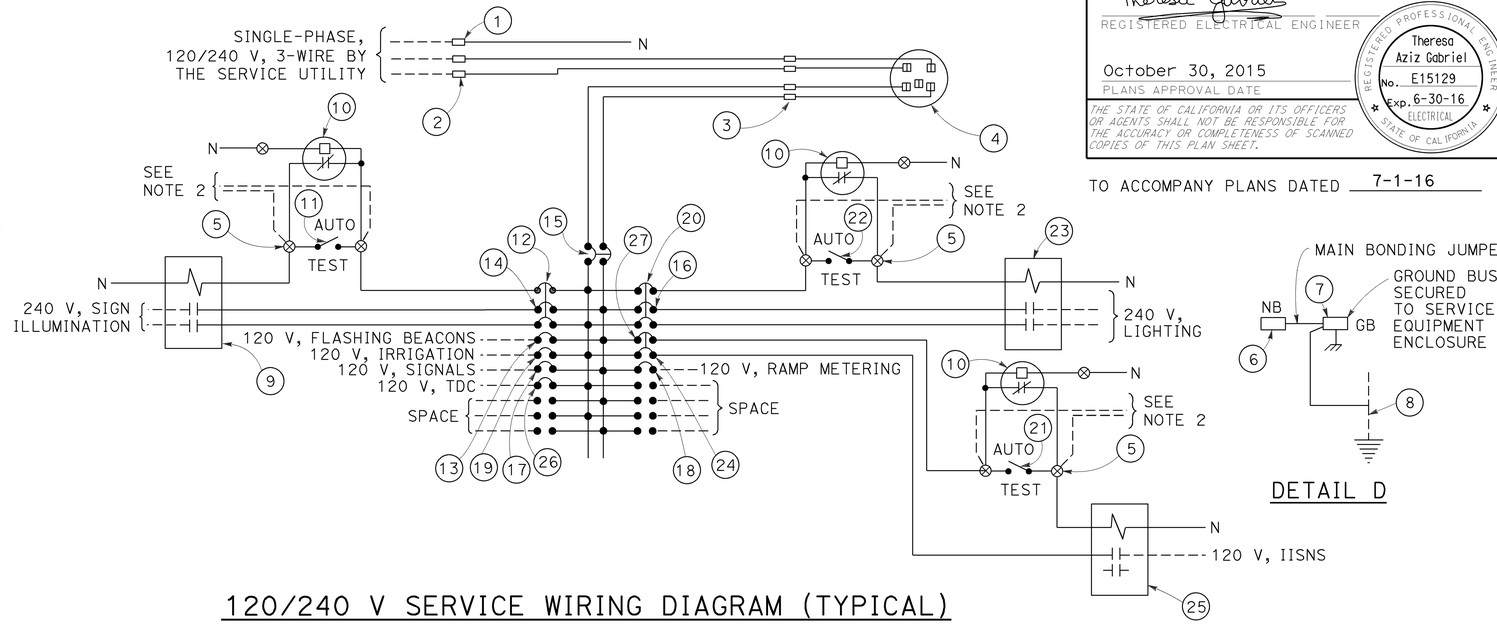

120/240 V SERVICE WIRING DIAGRAM (TYPICAL)

DETAIL C

DETAIL D

TYPE III-B SERVICE EQUIPMENT ENCLOSURE LEGEND (120/240 V)

ITEM	COMPONENT	NAMEPLATE DESCRIPTION	ITEM	COMPONENT	NAMEPLATE DESCRIPTION
1	NEUTRAL LUG		14	30 A, 240 V, 2P, CB	SIGN ILLUMINATION
2	LANDING LUG		15	100 A, 240 V, 2P, CB	MAIN BREAKER
3	TEST BYPASS FACILITY		16	30 A, 240 V, 2P, CB	LIGHTING
4	METER SOCKET AND SUPPORT		17	50 A, 120 V, 1P, CB	SIGNALS
5	TERMINAL BLOCKS		18	30 A, 120 V, 1P, CB	RAMP METERING
6	NEUTRAL BUS		19	20 A, 120 V, 1P, CB	IRRIGATION
7	GROUND BUS		20	15 A, 120 V, 1P, CB	LIGHTING CONTROL
8	GROUNDING ELECTRODE		21	15 A, 1P, TEST SWITCH	IISNS TEST SWITCH
9	30 A, 2P, NO CONTACTOR	SIGN ILLUMINATION	22	15 A, 1P, TEST SWITCH	LIGHTING TEST SWITCH
10	PHOTOELECTRIC UNIT (NOTE 4)	PEU	23	60 A, 2P, NO CONTACTOR	LIGHTING
11	15 A, 1P, TEST SWITCH	SIGN ILLUMINATION TEST SWITCH	24	15 A, 120 V, 1P, CB	IISNS
12	15 A, 120 V, 1P, CB	SIGN ILLUMINATION CONTROL	25	30 A, 2P, NO CONTACTOR	IISNS
13	15 A, 120 V, 1P, CB	FLASHING BEACON	26	20 A, 120 V, IP, CB	TELEPHONE DEMARCATION CABINET
			27	15 A, 120 V, 1P, CB	IISNS CONTROL

NOTES:

1. Unless otherwise indicated on the plans, service equipment items shall be provided for each service equipment enclosure as shown.
2. Connect to remote test switch mounted on lighting standards, sign post or structure when required.
3. Items 1 and 6 shall be isolated from the service equipment enclosure.
4. Type V photoelectric control shall be used unless otherwise indicated on the plans.
5. Item 12, 20 and 27 shall be ganged operated CB.

STATE OF CALIFORNIA
DEPARTMENT OF TRANSPORTATION

ELECTRICAL SYSTEMS (SERVICE EQUIPMENT ENCLOSURE AND TYPICAL WIRING DIAGRAM, TYPE III-B SERIES)

NO SCALE

RSP ES-2E DATED OCTOBER 30, 2015 SUPERSEDES STANDARD PLAN ES-2E DATED MAY 20, 2011 - PAGE 432 OF THE STANDARD PLANS BOOK DATED 2010.

REVISED STANDARD PLAN RSP ES-2E

2010 REVISED STANDARD PLAN RSP ES-2E

8-20-15

Dist	COUNTY	ROUTE	POST MILES TOTAL PROJECT	SHEET No.	TOTAL SHEETS
07	LA	105,110	R6.6/R8.0 13.2/14.7	84	93

REGISTERED CIVIL ENGINEER

July 15, 2016

PLANS APPROVAL DATE

REGISTERED PROFESSIONAL ENGINEER
Stanley P. Johnson
No. C57793
Exp. 3-31-18
CIVIL
STATE OF CALIFORNIA

THE STATE OF CALIFORNIA OR ITS OFFICERS OR AGENTS SHALL NOT BE RESPONSIBLE FOR THE ACCURACY OR COMPLETENESS OF SCANNED COPIES OF THIS PLAN SHEET.

TO ACCOMPANY PLANS DATED 7-1-16

2010 REVISED STANDARD PLAN RSP ES-6E

LUMINAIRE MAST ARM DATA			
PROJECTED LENGTH	THICKNESS	MINIMUM OD AT POLE	MOUNTING HEIGHT
* 6'-0"	0.1196"	3¼"	36'-9"±
* 8'-0"		3½"	37'-3"±
* 10'-0"		3⅞"	38'-0"±
* 12'-0"			39'-0"±
* 15'-0"		4¼"	39'-6"±
** 20'-0"	0.1793"	5"	37'-0"±

* TYPE 30
** TYPE 31

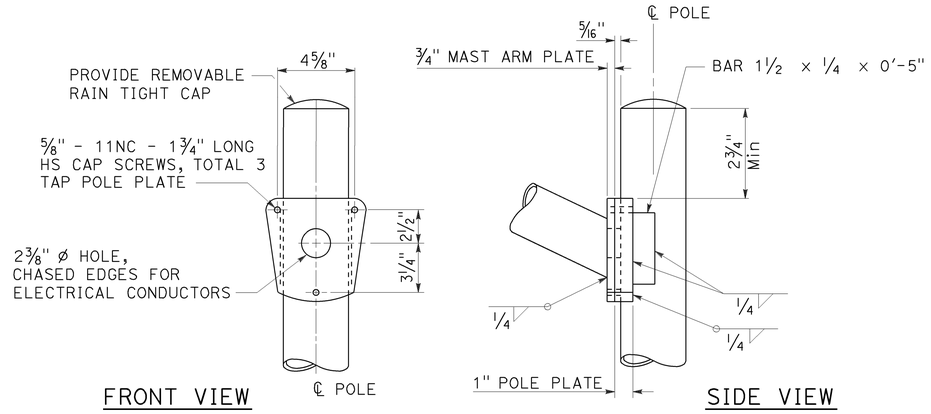

TYPE 30
DETAIL A

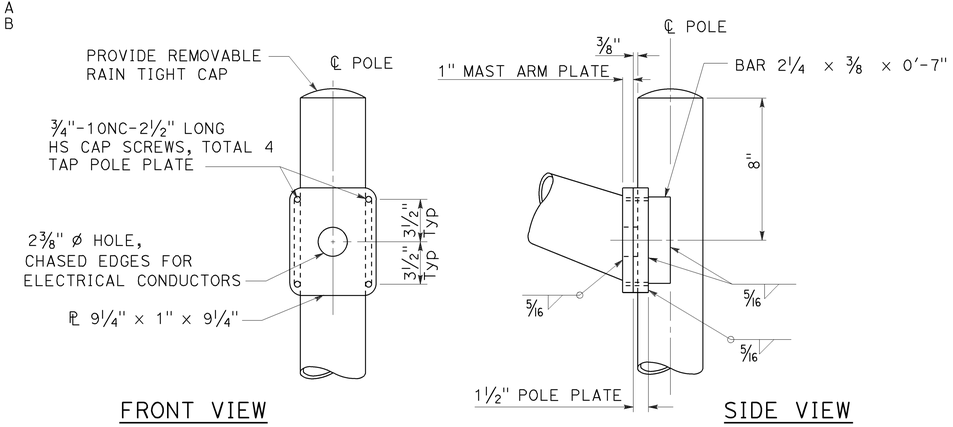

TYPE 31
DETAIL B

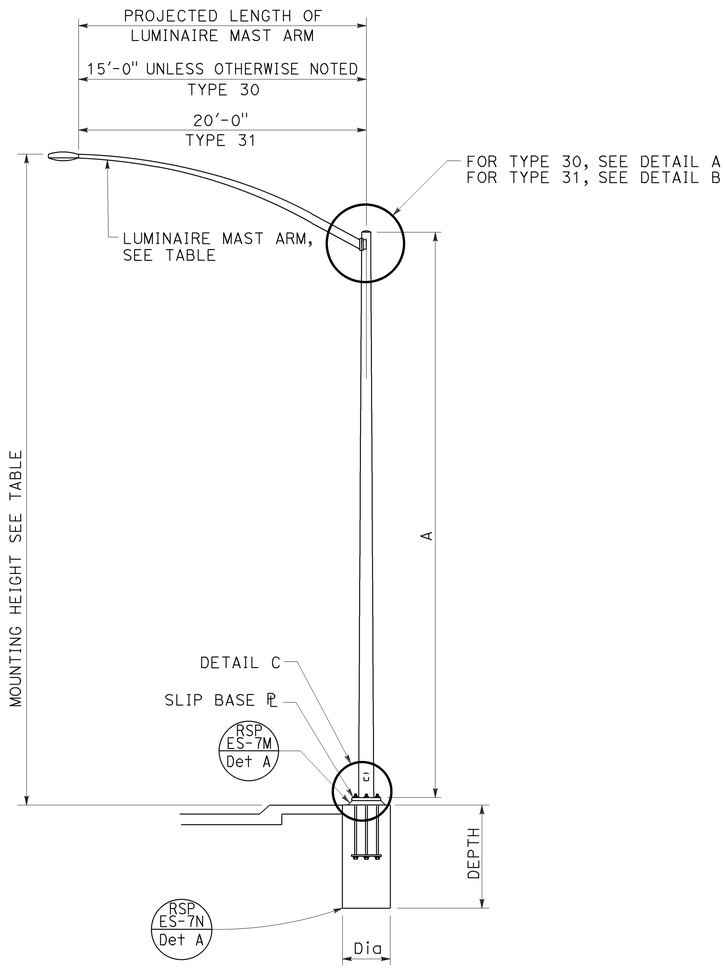

ELEVATION A

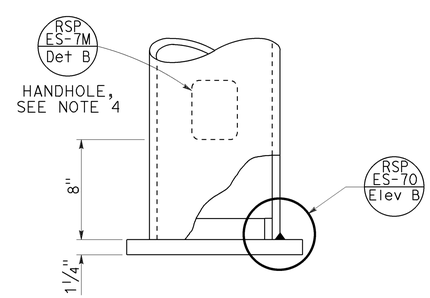

DETAIL C

NOTES:

1. For slip base plate details, see Revised Standard Plan RSP ES-6F.
2. For Type 30 fixed base use Type 15 base plate and foundation shown on Revised Standard Plan RSP ES-6A. Use 1¼" Dia x 3'-6" anchor bolts.
3. For Type 31 fixed base use Type 32 base plate, anchor bolts and foundation on Revised Standard Plan RSP ES-6G.
4. Handhole shall be located on the downstream side of traffic.
5. For additional notes and details, see Revised Standard Plans RSP ES-7M and RSP ES-7N.

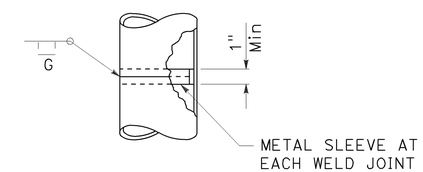

POLE SPLICE

POLE TYPE	POLE DATA				CIDH PILE FOUNDATION	
	A HEIGHT	Min OD BASE	Min OD TOP	Min THICKNESS	Dia	DEPTH
30	35'-0"	8¾"	3 11/16"	0.1196"	2'-6"	7'-0"
31		10¾"	5 11/16"	0.1793"	3'-0"	8'-0"

STATE OF CALIFORNIA
DEPARTMENT OF TRANSPORTATION

ELECTRICAL SYSTEMS (LIGHTING STANDARD, TYPES 30 AND 31)

NO SCALE

RSP ES-6E DATED JULY 15, 2016 SUPERSEDES RSP ES-6E DATED OCTOBER 30, 2015 AND STANDARD PLAN ES-6E DATED MAY 20, 2011 - PAGE 456 OF THE STANDARD PLANS BOOK DATED 2010.

REVISED STANDARD PLAN RSP ES-6E

Dist	COUNTY	ROUTE	POST MILES TOTAL PROJECT	SHEET No.	TOTAL SHEETS
07	LA	105,110	R6.6/R8.0 13.2/14.7	85	93

REGISTERED CIVIL ENGINEER

October 30, 2015

PLANS APPROVAL DATE

REGISTERED PROFESSIONAL ENGINEER Stanley P. Johnson No. C57793 Exp. 3-31-16 CIVIL STATE OF CALIFORNIA

THE STATE OF CALIFORNIA OR ITS OFFICERS OR AGENTS SHALL NOT BE RESPONSIBLE FOR THE ACCURACY OR COMPLETENESS OF SCANNED COPIES OF THIS PLAN SHEET.

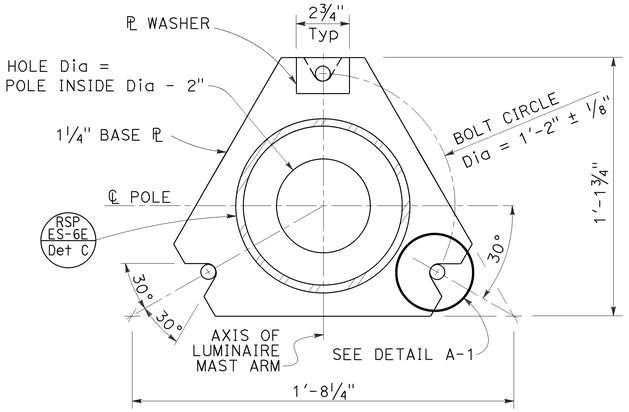

BASE PLATE
DETAIL A

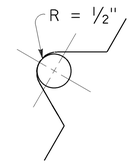

DETAIL A-1

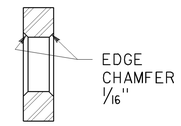

SECTION A-A

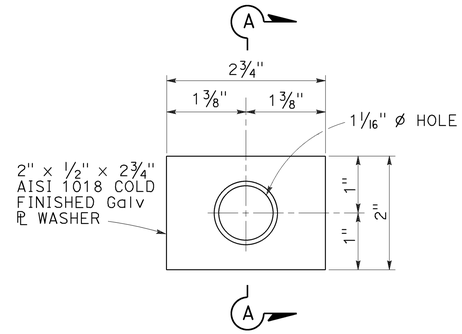

PLATE WASHER
DETAIL D

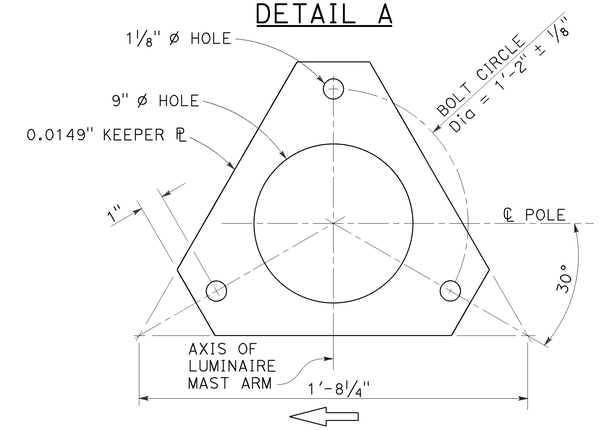

KEEPER PLATE
DETAIL B

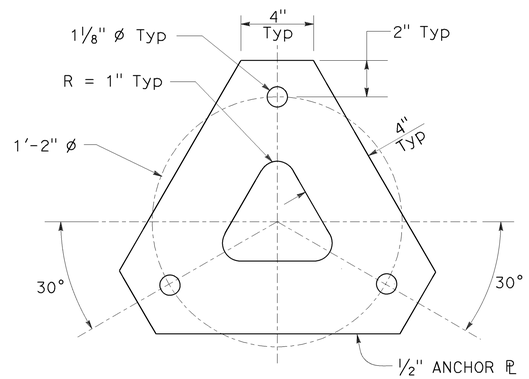

ANCHOR PLATE
DETAIL E

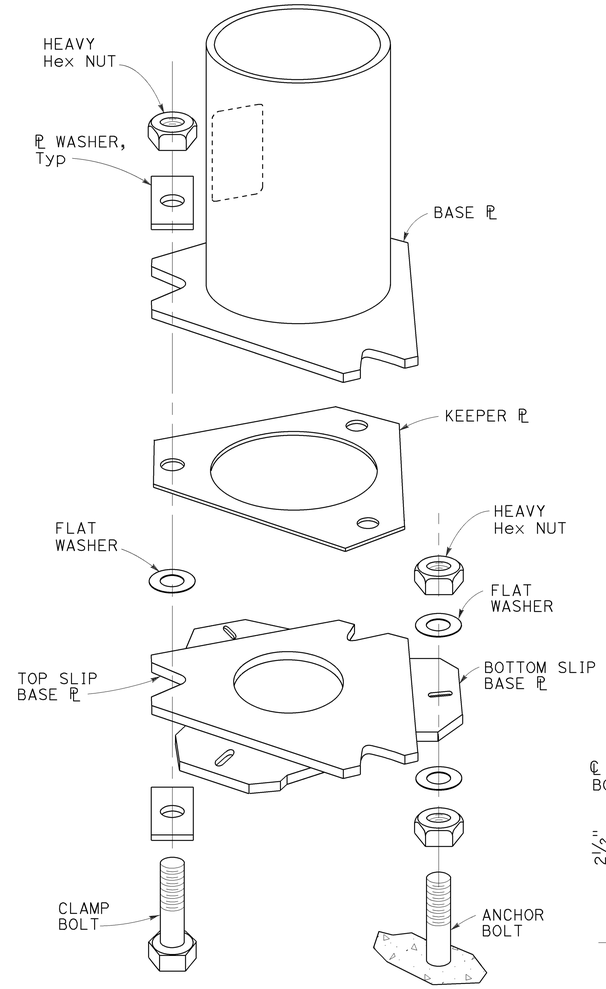

SLIP BASE DETAIL
DETAIL F

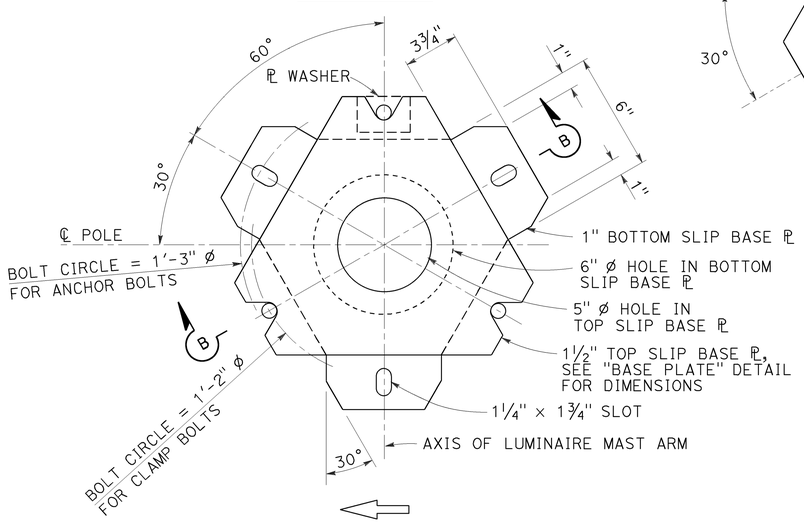

BOTTOM PLATE
DETAIL C

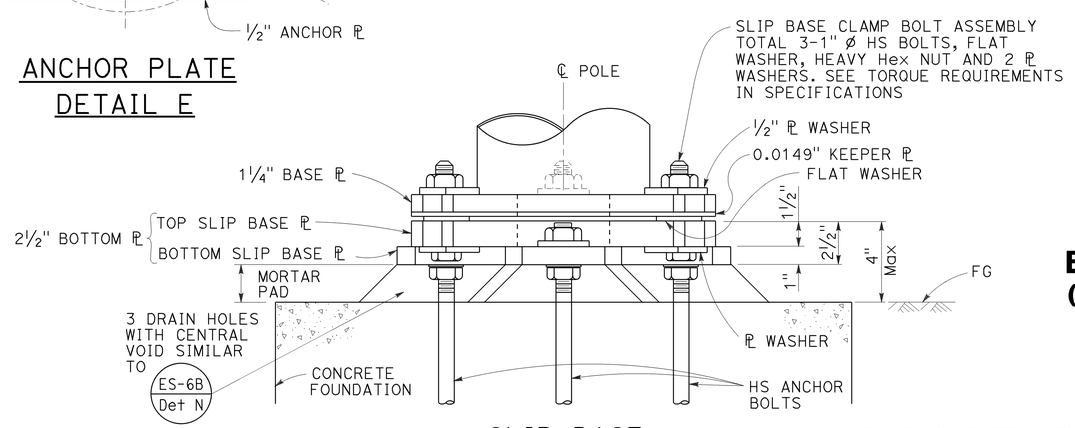

SLIP BASE
ELEVATION A

NOTES: TO ACCOMPANY PLANS DATED 7-1-16

1. 1" ø HS anchor bolts. For clamp bolts, see specifications.
2. Conduit shall not protrude more than 2" above top of foundation.
3. Handhole shall be located on the downstream side of traffic.
4. For Type 30 fixed base and for Type 31 fixed base, see Notes 3 and 4 on Revised Standard Plan RSP ES-6E.

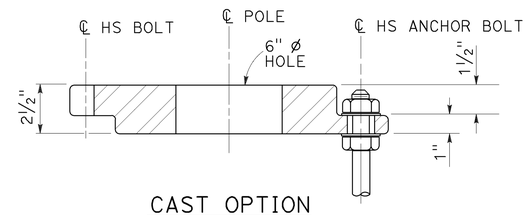

CAST OPTION

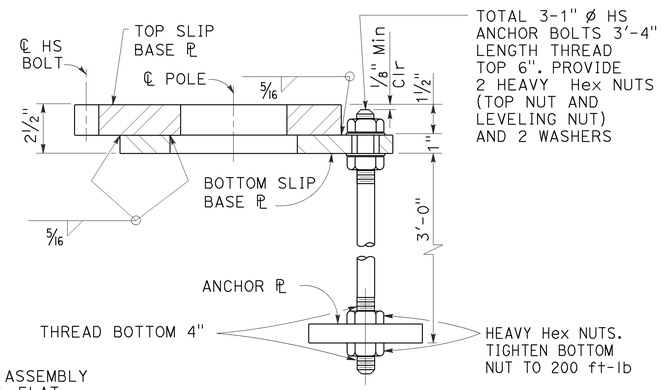

WELDED OPTION

SECTION B-B

STATE OF CALIFORNIA
DEPARTMENT OF TRANSPORTATION

ELECTRICAL SYSTEMS (LIGHTING STANDARD, SLIP BASE PLATE)

NO SCALE

RSP ES-6F DATED OCTOBER 30, 2015 SUPERSEDES STANDARD PLAN ES-6F DATED MAY 20, 2011 - PAGE 457 OF THE STANDARD PLANS BOOK DATED 2010.

REVISED STANDARD PLAN RSP ES-6F

2010 REVISED STANDARD PLAN RSP ES-6F

8-20-15

Dist	COUNTY	ROUTE	POST MILES TOTAL PROJECT	SHEET No.	TOTAL SHEETS
07	LA	105,110	R6.6/R8.0 13.2/14.7	86	93

REGISTERED CIVIL ENGINEER

July 15, 2016
PLANS APPROVAL DATE

REGISTERED PROFESSIONAL ENGINEER Stanley P. Johnson No. C57793 Exp. 3-31-18 CIVIL STATE OF CALIFORNIA

THE STATE OF CALIFORNIA OR ITS OFFICERS OR AGENTS SHALL NOT BE RESPONSIBLE FOR THE ACCURACY OR COMPLETENESS OF SCANNED COPIES OF THIS PLAN SHEET.

TO ACCOMPANY PLANS DATED 7-1-16

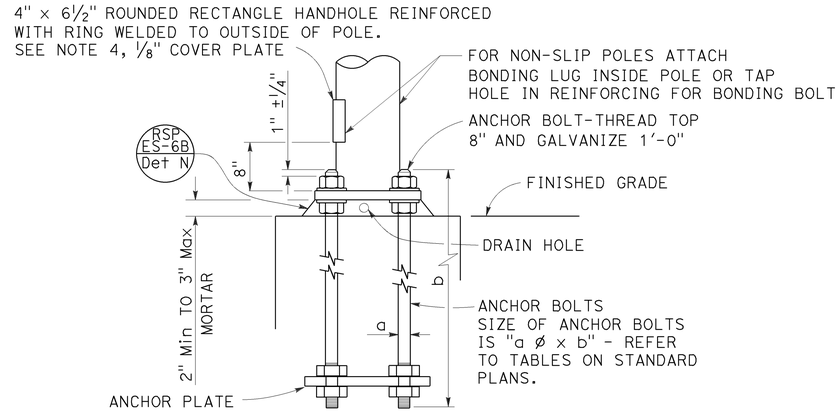

HANDHOLE AND ANCHORAGE
DETAIL A

IDENTIFICATION NUMBER

1. Attach a stamped metal tag with pole's identification number above the handhole. ¼" high number, minimum.
2. Attach a stamped metal tag with mast arm's identification number to the bottom of the signal mast arm near the pole plate. ¼" high number, minimum.

Type — Load case (Use SL for special load case) — Design wind velocity (mph) — Signal mast arm length (ft) {Near handhole: Maximum signal mast arm length for pole type; Near pole plate: Installed signal mast arm length} — Standard plan year — Only for poles or mast arms using Detail F — Only for poles or mast arms using RSP ES-7O

26A - 3 - 100 - 45 - 10 - F or FB

SAMPLE IDENTIFICATION NUMBER

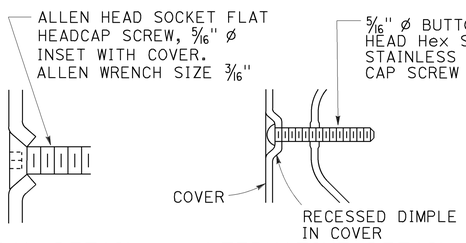

TYPICAL DETAIL
DETAIL B-1

ALTERNATIVE DETAIL
DETAIL B-2

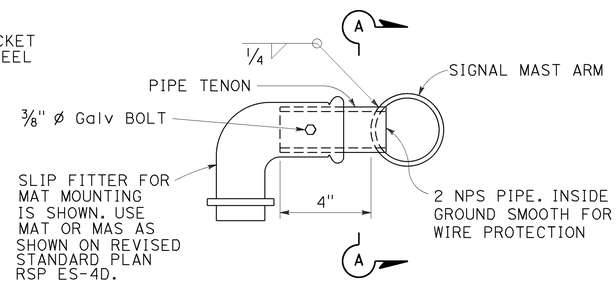

SIDE TENON
DETAIL S-1

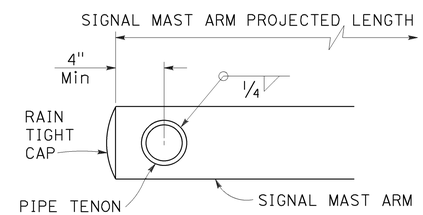

SECTION A-A

PIPE TENONS
DETAIL S

NOTES:

1. Provide a Hex nut, leveling nut and 2 washers for each bolt.
2. Luminaire mast arms shall be round, tapered steel tubes, taper of 0.1375" to 0.143-inch per foot with an end section 2⅜" OD for mounting hardware. Extensions of 2 NPS Standard pipe and 7" long may be used at the option of the manufacturer. When low pressure sodium luminaires are required, the extension shall be 1'-3".
3. Signal mast arms shall be round, tapered steel tubes, maximum taper 0.143-inch per foot.
4. Handhole reinforcement ring shall be ¼" x 2" for 0.1196" to 0.2391" thick poles, ⅜" x 2" for 0.3125" to 0.375" thick poles.
5. Handholes shall be located on the downstream side of traffic.
6. Detail F, fatigue resistant weld, is required at socket welded signal mast arm plate and pole base plate.
7. Cap screws shall be tightened by the turn-of-nut method ⅓ turn from a snug tight condition. No washer will be required.
8. Outside diameter, wall thickness, and corresponding section properties of poles and mast arms as shown in the Standard Plans are minimums. Unless otherwise specified, alternative sections shall require approval by the Engineer.
9. Design: AASHTO Standard Specifications for Structural Support for Highway Signs, Luminaires, and Traffic Signals, 6th Edition. Basic Wind Speed = 100 mph (3 seconds gust). Yearly Mean Wind Velocity = 15.6 mph.
10. Materials (Structural steel):
    fy = 55,000 psi (tapered steel tube and anchor bolts)
    fy = 50,000 psi (unless otherwise noted)
11. Materials (Reinforced concrete):
    f'c = 3,625 psi
    fy = 60,000 psi

WELD SIZE	WALL THICKNESS
3/16"	0.1196"
¼"	0.1793"
5/16"	0.2391"
⅜"	0.3125"
7/16"	0.375"

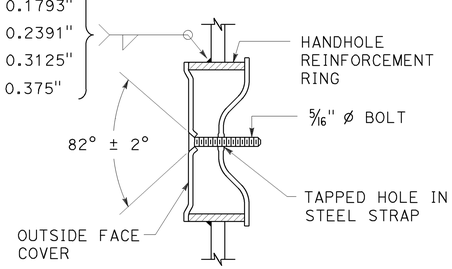

TAMPER RESISTANT HANDHOLE COVER
DETAIL B

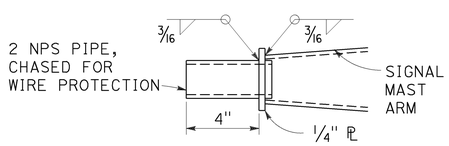

TIP TENON
DETAIL TL

This detail supersedes Detail S when so designated

WELD SIZE	WALL THICKNESS
⅛"	0.1196"
3/16"	0.1793"
¼"	0.2391"

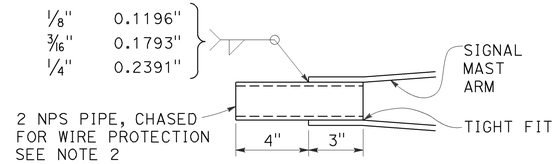

TIP TENON
DETAIL TS

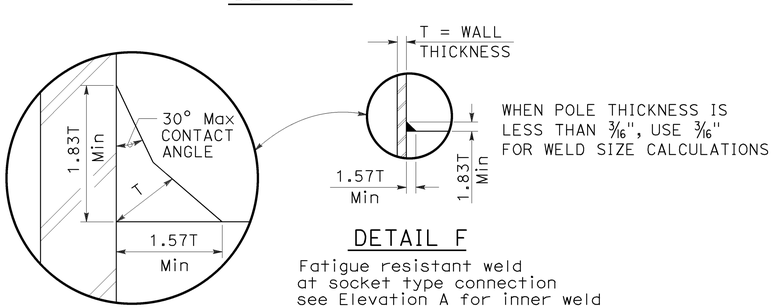

DETAIL F

Fatigue resistant weld at socket type connection see Elevation A for inner weld

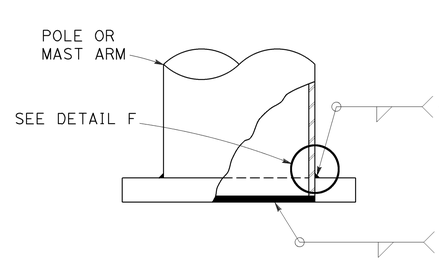

WELD SIZE	WALL THICKNESS
¼"	0.1196"
5/16"	0.1793"
⅜"	0.2391"
7/16"	0.3125"

⅛"	0.1196"
3/16"	0.1793"
¼"	0.2391"
5/16"	0.3125"

ELEVATION A

STATE OF CALIFORNIA
DEPARTMENT OF TRANSPORTATION

ELECTRICAL SYSTEMS (SIGNAL AND LIGHTING STANDARD, DETAIL No. 1)

NO SCALE

RSP ES-7M DATED JULY 15, 2016 SUPERSEDES RSP ES-7M DATED OCTOBER 30, 2015 AND STANDARD PLAN ES-7M DATED MAY 20, 2011 - PAGE 474 OF THE STANDARD PLANS BOOK DATED 2010.

REVISED STANDARD PLAN RSP ES-7M

2010 REVISED STANDARD PLAN RSP ES-7M

6-20-16

Dist	COUNTY	ROUTE	POST MILES TOTAL PROJECT	SHEET No.	TOTAL SHEETS
07	LA	105,110	R6.6/R8.0 13.2/14.7	87	93

REGISTERED CIVIL ENGINEER

July 15, 2016
PLANS APPROVAL DATE

REGISTERED PROFESSIONAL ENGINEER Stanley P. Johnson No. C57793 Exp. 3-31-18 CIVIL STATE OF CALIFORNIA

THE STATE OF CALIFORNIA OR ITS OFFICERS OR AGENTS SHALL NOT BE RESPONSIBLE FOR THE ACCURACY OR COMPLETENESS OF SCANNED COPIES OF THIS PLAN SHEET.

TO ACCOMPANY PLANS DATED 7-1-16

2010 REVISED STANDARD PLAN RSP ES-7N

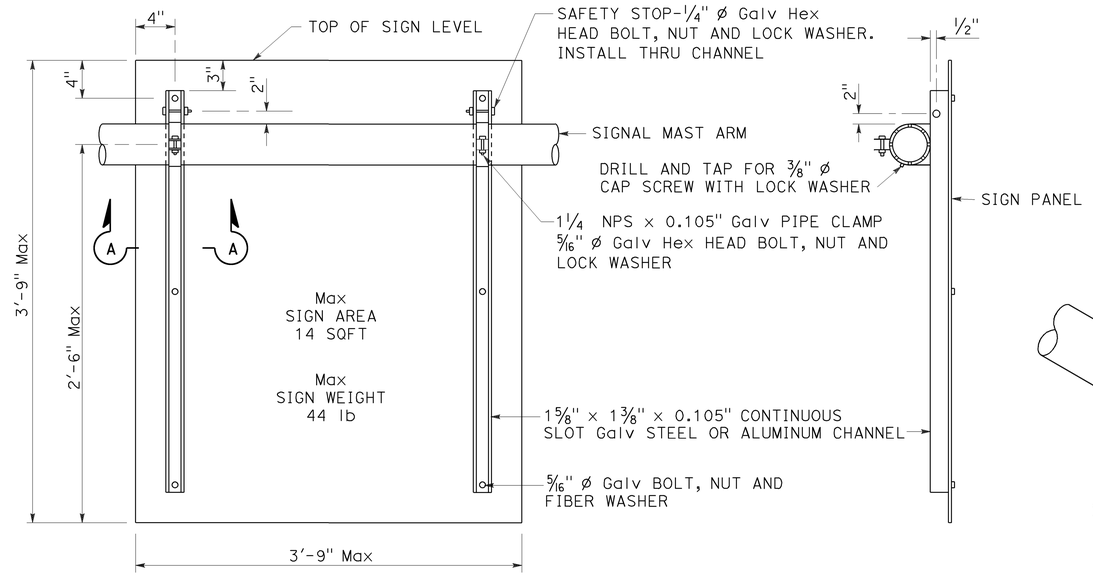

REAR VIEW

SIDE VIEW

SIGN MOUNTING DETAILS
DETAIL U

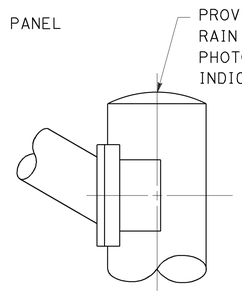

STANDARD TOP
DETAIL B-1

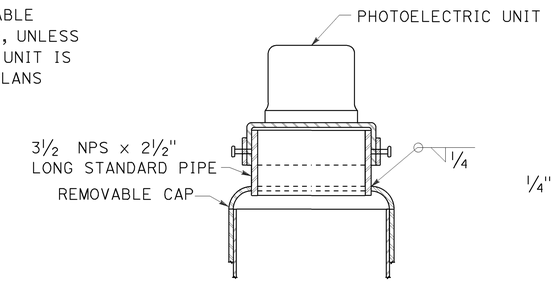

MOUNTING ADAPTER FOR
PHOTOELECTRIC UNIT
DETAIL B-2

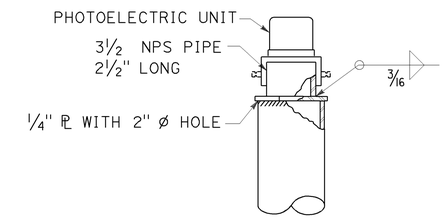

ALTERNATIVE
MOUNTING ADAPTER
DETAIL B-3

POLE TOP DETAILS
DETAIL B

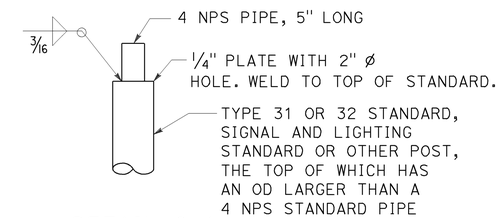

DETAIL C-1

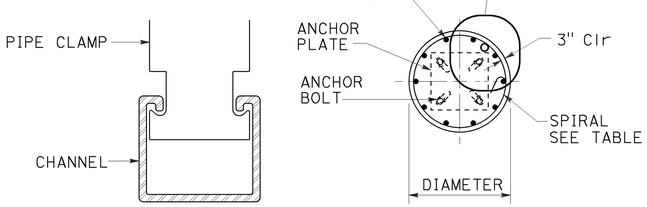

SECTION A-A

SECTION B-B

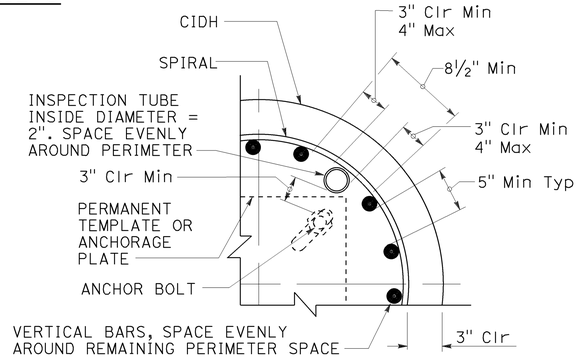

INSPECTION TUBE PLACEMENT
DETAIL I

CIDH REINFORCING AND INSPECTION TUBE SCHEDULE			
CIDH DIAMETER	VERTICAL BARS	SPIRAL	INSPECTION TUBE
2 ft	8-#5	#4 AT 6	2
2.5 ft	10-#6	#5 AT 6	4*
3 ft	12-#7		
3.5 ft	14-#8		4
4 ft	18-#9	2-#4 AT 7	5
4.5 ft	18-#9	2-#5 AT 7	5
5 ft	22-#10	2-#5 AT 7	6
6 ft	26-#11	2-#6 AT 7	7

* FOR SLIP BASE VERSIONS WITH 3 ANCHOR BOLTS USE 3 INSPECTION TUBES.

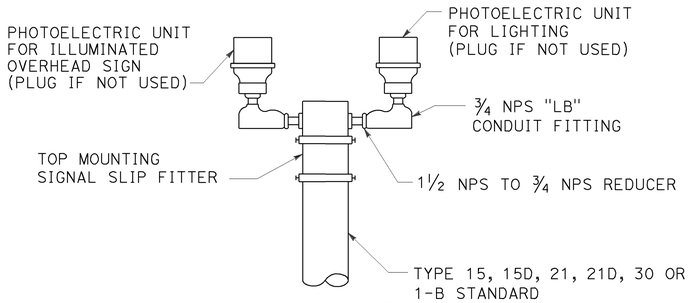

DETAIL C-2

DUAL PHOTOELECTRIC UNIT MOUNTING DETAIL
DETAIL C

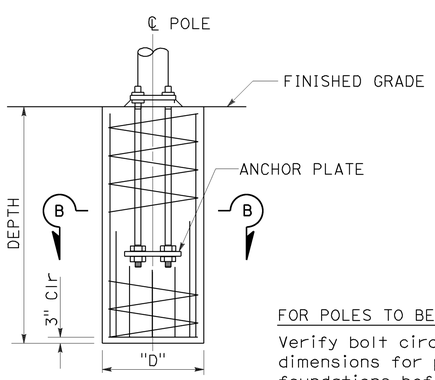

ELEVATION

FOR POLES TO BE INSTALLED ON EXISTING FOUNDATION:

Verify bolt circles, anchor bolt sizes and dependent dimensions for poles to be installed on existing foundations before fabricating the poles.

CAST-IN-DRILLED-HOLE PILE FOUNDATION, REINFORCED PILE
DETAIL A

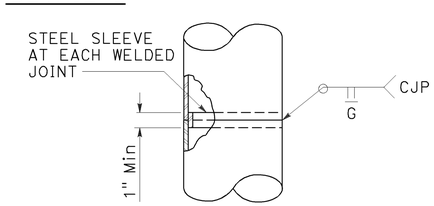

FOR UNIFORM TUBE THICKNESS
DETAIL T-1

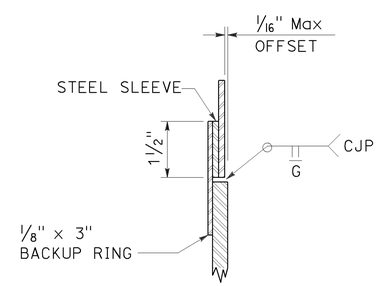

AT TUBE THICKNESS CHANGE
DETAIL T-2

POLE SPLICES
DETAIL T

STATE OF CALIFORNIA
DEPARTMENT OF TRANSPORTATION

ELECTRICAL SYSTEMS (SIGNAL AND LIGHTING STANDARD, DETAIL No. 2)

NO SCALE

RSP ES-7N DATED JULY 15, 2016 SUPERSEDES RSP ES-7N DATED OCTOBER 30, 2015 AND STANDARD PLAN ES-7N DATED MAY 20, 2011 - PAGE 475 OF THE STANDARD PLANS BOOK DATED 2010.

REVISED STANDARD PLAN RSP ES-7N

6-20-16

DIST	COUNTY	ROUTE	POST MILES TOTAL PROJECT	SHEET NO.	TOTAL SHEETS
07	LA	105,110	R6.6/R8.0 13.2/14.7	88	93

Theresa Gabriel
REGISTERED ELECTRICAL ENGINEER

April 15, 2016
PLANS APPROVAL DATE

REGISTERED PROFESSIONAL ENGINEER Theresa Aziz Gabriel No. E15129 Exp. 6-30-16 ELECTRICAL STATE OF CALIFORNIA

THE STATE OF CALIFORNIA OR ITS OFFICERS OR AGENTS SHALL NOT BE RESPONSIBLE FOR THE ACCURACY OR COMPLETENESS OF SCANNED COPIES OF THIS PLAN SHEET.

TO ACCOMPANY PLANS DATED 7-1-16

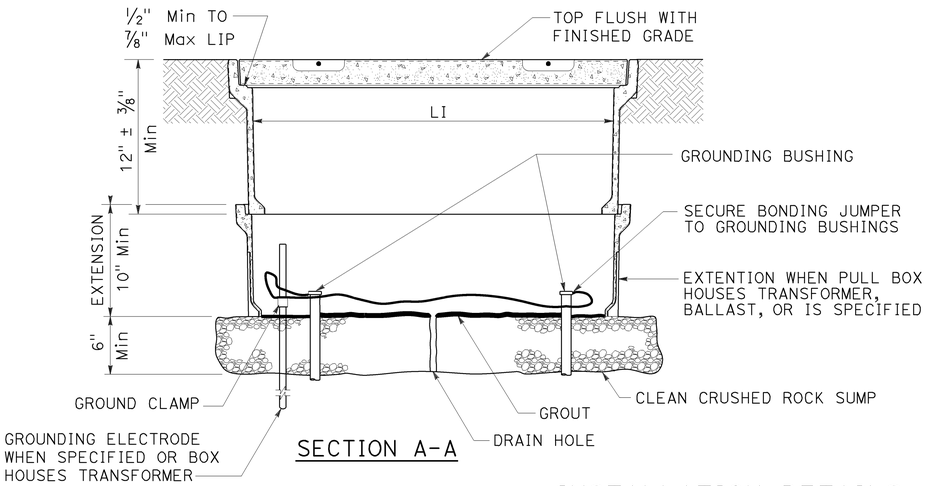

SECTION A-A

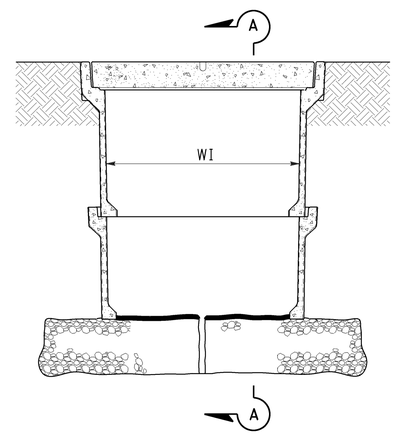

SIDE VIEW

INSTALLATION DETAILS

DETAIL A

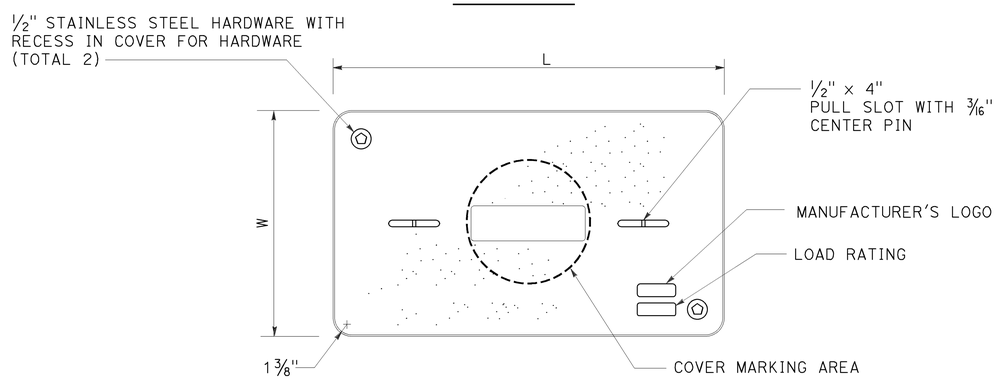

COVER TOP VIEW

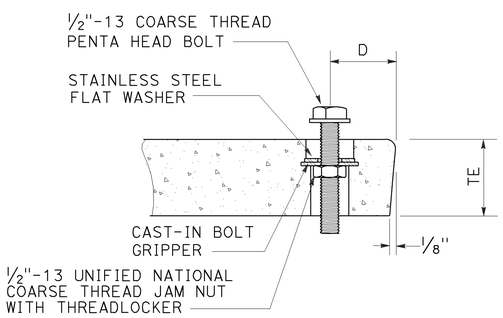

TYPICAL COVER CAPTIVE BOLT

OR SIMILAR

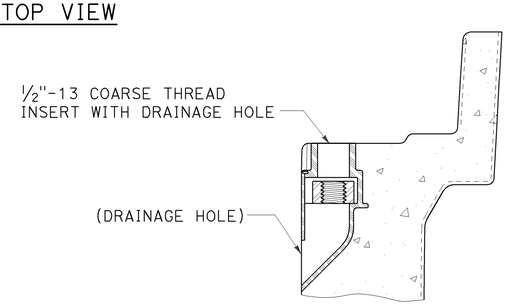

TYPICAL THREADED INSERT

OR SIMILAR

DIMENSION TABLE

PULL BOX	PULL BOX					COVER				
	MINIMUM DEPTH BOX	MINIMUM DEPTH EXTENSION	MINIMUM WEIGHT	LI Min	WI Min	TE	D	L	W	MINIMUM WEIGHT
No. 3 1/2	12"	N/A	40 lb	1' - 3"	9"	1 3/4"	1 3/4"	1'-3 1/4" - 1'-3 3/8"	10" - 10 1/8"	30 lb
No. 5	12"	10"	55 lb	1' - 8"	11"	2"	1 3/4"	1'-11 1/4"	1'-1 3/4"	60 lb
No. 6	12"	10"	70 lb	2' - 4 1/4"	1' - 3 1/4"	2"	2"	2'-6 1/2"	1'-5 1/2"	85 lb

NOTES:

1. The nominal dimensions of the opening in which the cover sets shall be the same as the cover dimensions except the length and width dimensions shall be 1/8" greater.
2. Covers and boxes shall be interchangeable with California standard male and female gages. When interchanged with a standard male or female gage, the top surfaces shall be flush within 1/8". Top outside radius of covers and pull boxes shall have a 1/8" radius.
3. Dimensions for the cover for non-traffic pull box are nominal values.

STATE OF CALIFORNIA
DEPARTMENT OF TRANSPORTATION

ELECTRICAL SYSTEMS (NON-TRAFFIC PULL BOX)

NO SCALE

RSP ES-8A DATED APRIL 15, 2016 SUPERSEDES RSP ES-8A DATED OCTOBER 30, 2015 AND RSP ES-8A DATED JULY 19, 2013 AND RSP ES-8A DATED JANUARY 20, 2012 THAT SUPPLEMENTS THE STANDARD PLANS BOOK DATED 2010.

REVISED STANDARD PLAN RSP ES-8A

2010 REVISED STANDARD PLAN RSP ES-8A

1-22-16

Dist	COUNTY	ROUTE	POST MILES TOTAL PROJECT	SHEET No.	TOTAL SHEETS
07	LA	105,110	R6.6/R8.0 13.2/14.7	89	93

Theresa Gabriel
REGISTERED ELECTRICAL ENGINEER

October 30, 2015
PLANS APPROVAL DATE

REGISTERED PROFESSIONAL ENGINEER
Theresa Aziz Gabriel
No. E15129
Exp. 6-30-16
ELECTRICAL
STATE OF CALIFORNIA

THE STATE OF CALIFORNIA OR ITS OFFICERS OR AGENTS SHALL NOT BE RESPONSIBLE FOR THE ACCURACY OR COMPLETENESS OF SCANNED COPIES OF THIS PLAN SHEET.

TO ACCOMPANY PLANS DATED 7-1-16

NOTE:

Curves represent the minimum footcandle (FC).

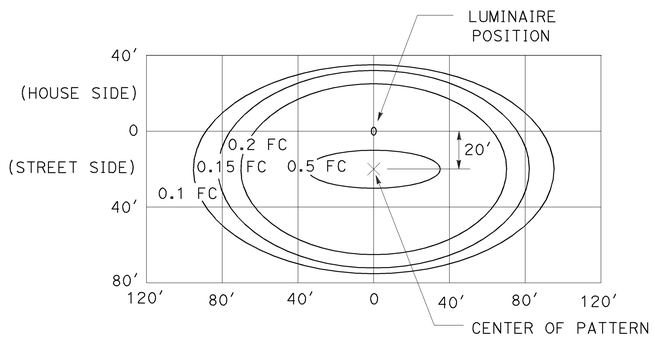

LED LUMINAIRE 165 W

34′ Mounting Height

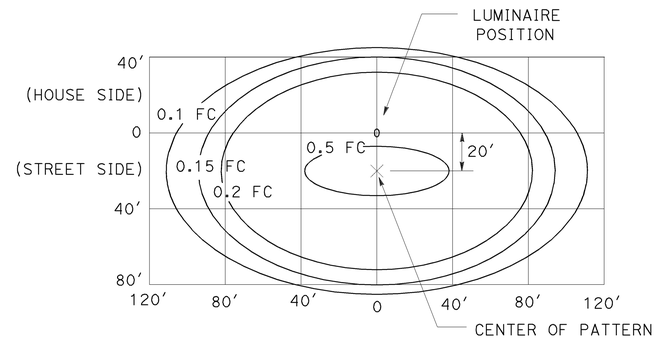

LED LUMINAIRE 235 W

40′ Mounting Height

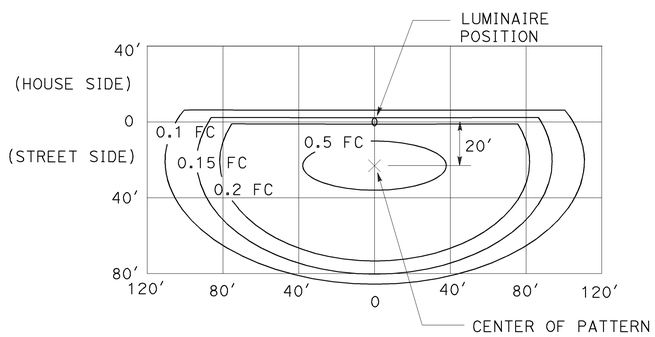

LED LUMINAIRE 235 W

40′ Mounting Height
with back side control

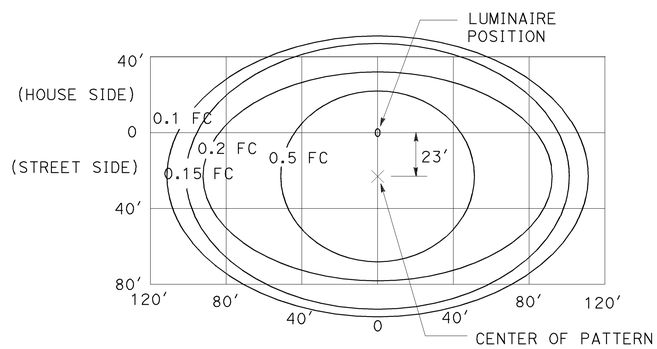

LED LUMINAIRE 300 W

40′ Mounting Height

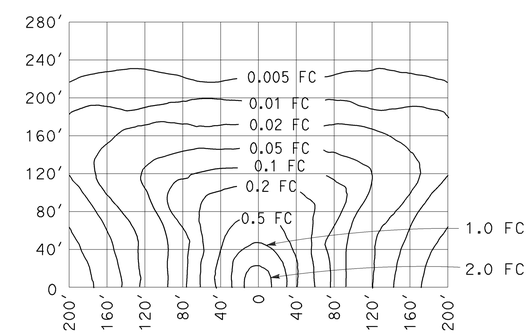

LOW-PRESSURE SODIUM LUMINAIRE 180 W

40′ Mounting Height
Lamp operated at 33,000 lm

STATE OF CALIFORNIA
DEPARTMENT OF TRANSPORTATION

ELECTRICAL SYSTEMS (ISOFOOTCANDLE CURVES)

NO SCALE

RSP ES-10A DATED OCTOBER 30, 2015 SUPERSEDES RSP ES-10A DATED JULY 19, 2013 THAT SUPPLEMENTS THE STANDARD PLANS BOOK DATED 2010.

REVISED STANDARD PLAN RSP ES-10A

2010 REVISED STANDARD PLAN RSP ES-10A

9-29-15

Dist	COUNTY	ROUTE	POST MILES TOTAL PROJECT	SHEET No.	TOTAL SHEETS
07	LA	105,110	R6.6/R8.0 13.2/14.7	90	93

REGISTERED CIVIL ENGINEER

July 15, 2016
PLANS APPROVAL DATE

REGISTERED PROFESSIONAL ENGINEER
Stanley P. Johnson
No. C57793
Exp. 3-31-18
CIVIL
STATE OF CALIFORNIA

THE STATE OF CALIFORNIA OR ITS OFFICERS OR AGENTS SHALL NOT BE RESPONSIBLE FOR THE ACCURACY OR COMPLETENESS OF SCANNED COPIES OF THIS PLAN SHEET.

TO ACCOMPANY PLANS DATED 7-1-16

2010 REVISED STANDARD PLAN RSP ES-11

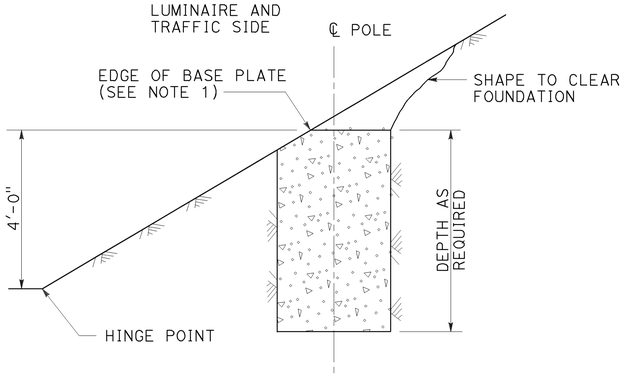

CUT SLOPES
STEEPER THAN 4:1,
LESS THAN 2:1
DETAIL A-1
See Note 2 and 3

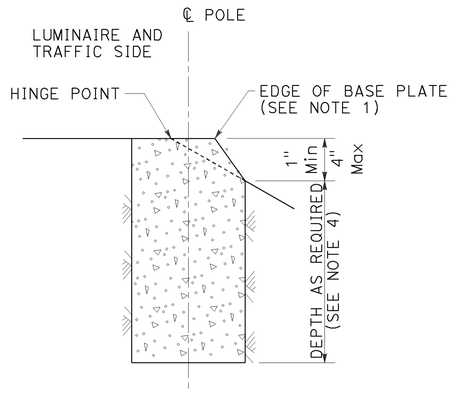

FILL SLOPES
STEEPER THAN 4:1,
LESS THAN 2:1
DETAIL A-2
See Note 2 and 3

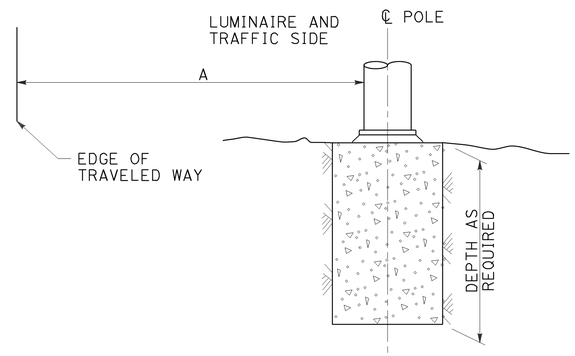

FLAT SECTIONS, CUT OR FILL SLOPES
4:1 OR FLATTER
DETAIL A-3
See Note 2

STANDARD TYPE	SETBACK (DIMENSION A)
32	30'-0" (Min)
31	20'-0" (Min)
15, 15D, 15-SB, 21, 21D, 30	ARM LENGTH (Min)

FOUNDATIONS ADJACENT TO ALL ROADWAYS EXCEPT
IN SIDEWALK, MEDIAN AND ISLAND AREAS
DETAIL A

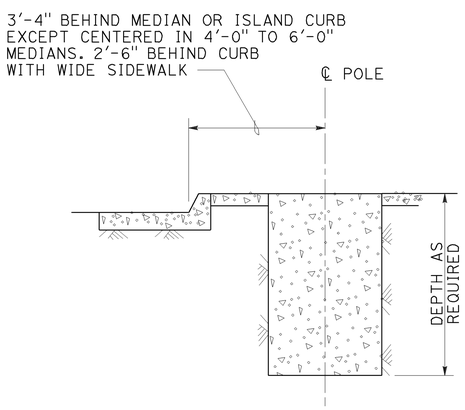

MEDIAN, ISLAND
OR WIDE SIDEWALK
DETAIL B-1
7' Wide and wider

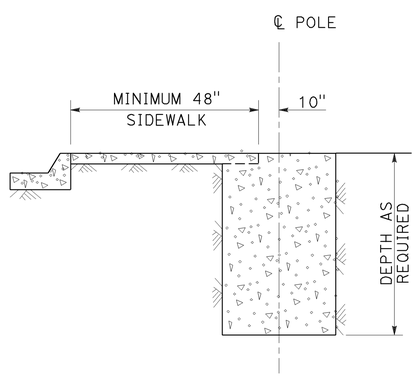

NARROW SIDEWALK
DETAIL B-2
Less than 7' wide

FOUNDATIONS IN SIDEWALK, MEDIAN AND ISLAND AREAS
DETAIL B

NOTES:

1. Where a portion of the foundation is above grade, the top edges shall have a 1" chamfer.
2. Slopes shall be horizontal to vertical ratio (Horizontal : Vertical).
3. Horizontal setbacks on cut and fill slopes steeper than 4:1 shall not exceed the distance shown for flat sections.
4. CIDH embedment depth shall be increased beyond standard depths by the diameter of the CIDH.

STATE OF CALIFORNIA
DEPARTMENT OF TRANSPORTATION

ELECTRICAL SYSTEMS (FOUNDATION INSTALLATIONS)

NO SCALE

RSP ES-11 DATED JULY 15, 2016 SUPERSEDES RSP ES-11 DATED JULY 19, 2013 AND STANDARD PLAN ES-11 DATED MAY 20, 2011 - PAGE 488 OF THE STANDARD PLANS BOOK DATED 2010.

REVISED STANDARD PLAN RSP ES-11

Dist	COUNTY	ROUTE	POST MILES TOTAL PROJECT	SHEET No.	TOTAL SHEETS
07	LA	105,110	R6.6/R8.0 13.2/14.7	91	93

Theresa Gabriel
REGISTERED ELECTRICAL ENGINEER

April 15, 2016
PLANS APPROVAL DATE

REGISTERED PROFESSIONAL ENGINEER
Theresa Aziz Gabriel
No. E15129
Exp. 6-30-16
ELECTRICAL
STATE OF CALIFORNIA

THE STATE OF CALIFORNIA OR ITS OFFICERS OR AGENTS SHALL NOT BE RESPONSIBLE FOR THE ACCURACY OR COMPLETENESS OF SCANNED COPIES OF THIS PLAN SHEET.

TO ACCOMPANY PLANS DATED 7-1-16

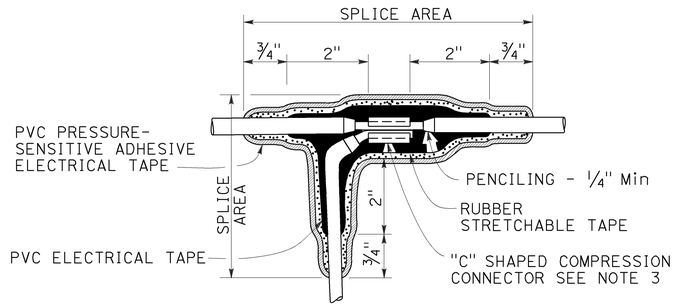

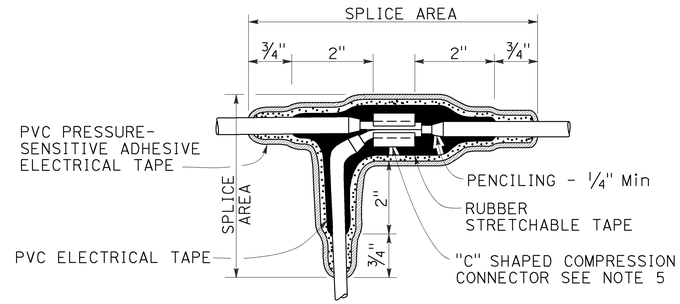

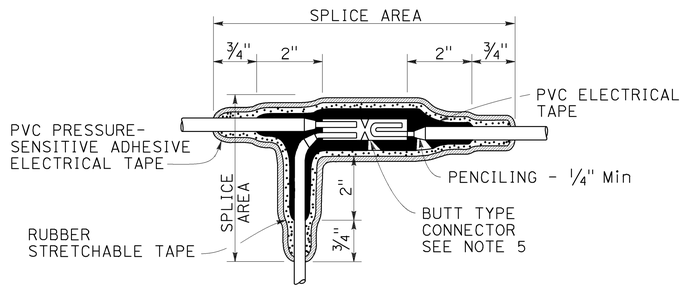

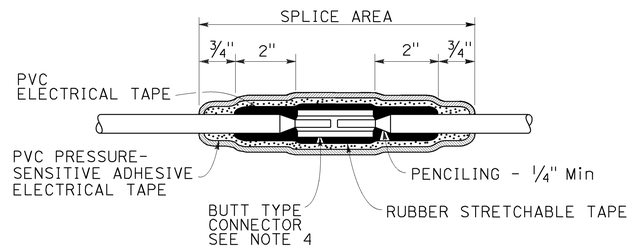

TYPICAL SPLICE INSULATION METHOD B

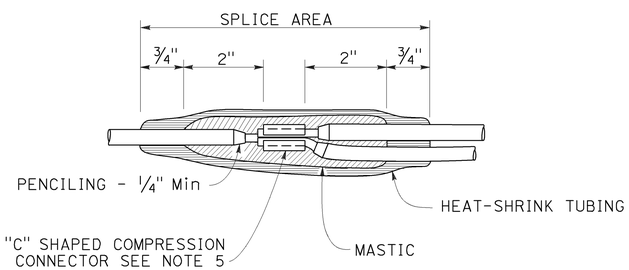

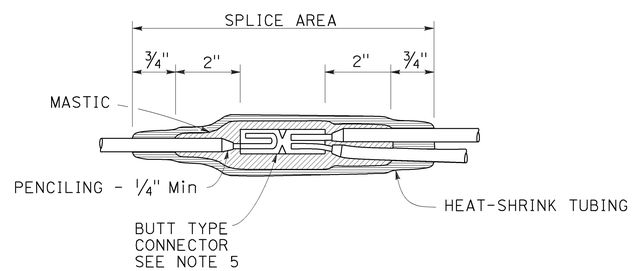

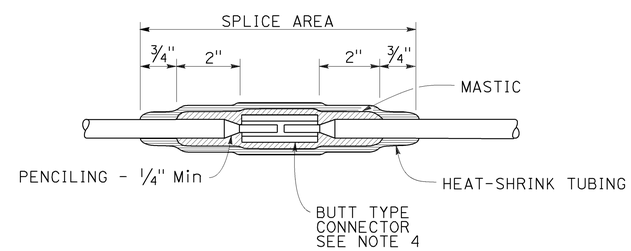

TYPICAL SPLICE INSULATION HEAT-SHRINK TUBING

NOTES:

1. Dimensions are minimum.
2. Rubber tapes shall be rolled after application.
3. Between 1 free-end and 1 through conductor.
4. Between 2 free-end conductors.
5. Between 3 free-end conductors.

STATE OF CALIFORNIA
DEPARTMENT OF TRANSPORTATION

ELECTRICAL SYSTEMS (SPLICE INSULATION METHODS DETAILS)

NO SCALE

RSP ES-13A DATED APRIL 15, 2016 SUPERSEDES RSP ES-13A DATED OCTOBER 30, 2015 AND STANDARD PLAN ES-13A DATED MAY 20, 2011 - PAGE 491 OF THE STANDARD PLANS BOOK DATED 2010.

REVISED STANDARD PLAN RSP ES-13A

2010 REVISED STANDARD PLAN RSP ES-13A

1-22-16

Dist	COUNTY	ROUTE	POST MILES TOTAL PROJECT	SHEET No.	TOTAL SHEETS
07	LA	105,110	R6.6/R8.0 13.2/14.7	92	93

Theresa Gabriel
REGISTERED ELECTRICAL ENGINEER

April 15, 2016
PLANS APPROVAL DATE

REGISTERED PROFESSIONAL ENGINEER Theresa Aziz Gabriel No. E15129 Exp. 6-30-16 ELECTRICAL STATE OF CALIFORNIA

THE STATE OF CALIFORNIA OR ITS OFFICERS OR AGENTS SHALL NOT BE RESPONSIBLE FOR THE ACCURACY OR COMPLETENESS OF SCANNED COPIES OF THIS PLAN SHEET.

TO ACCOMPANY PLANS DATED 7-1-16

CIRCUIT VOLTAGE	FUSE VOLTAGE RATING	FUSE CURRENT RATING						
		HPS LAMP BALLAST		LOW PRESSURE SODIUM BALLAST	INDUCTION SIGN LIGHTING	SINGLE PHASE (TWO WIRE) TRANSFORMERS (PRIMARY SIDE)		
		70 W	100 W	180 W	85 W	1 kVA	2 kVA	3 kVA
120 V	250 V	5 A	5 A	5 A	5 A	10 A	20 A	30 A
240 V	250 V	5 A	5 A	5 A	5 A	6 A	10 A	20 A
480 V	500-600 V	5 A	5 A	3 A	1 A (SEE NOTE 2)	3 A	6 A	10 A

NOTES:

1. Primary lines of multiple ballasts shall be provided with fused connectors. Fuse ratings shall be as noted above.
2. See Revised Standard Plan RSP ES-15D, Type SC3 control.

FUSE RATINGS FOR FUSED CONNECTORS

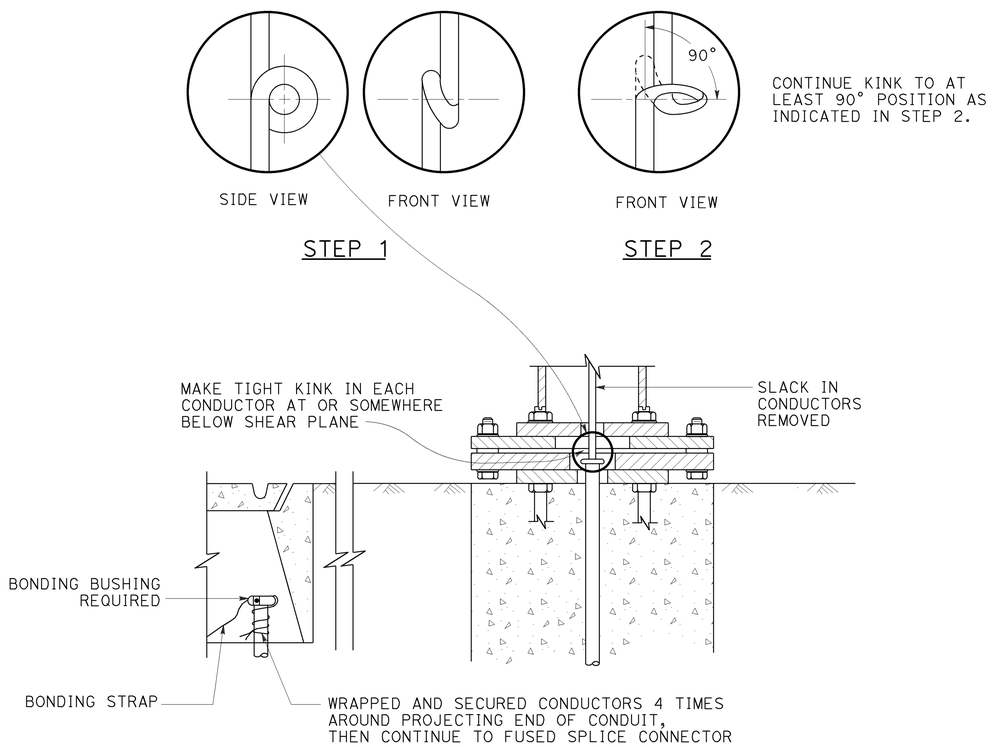

KINKING DETAIL FOR SLIP BASE STANDARDS

DETAIL A

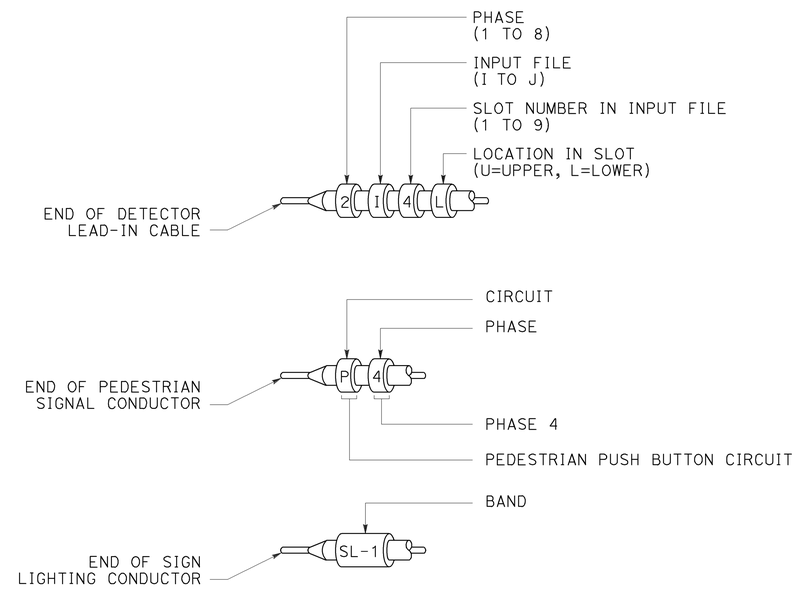

TYPICAL BANDING DETAILS

DETAIL B

STATE OF CALIFORNIA
DEPARTMENT OF TRANSPORTATION

ELECTRICAL SYSTEMS (FUSE RATING, KINKING AND BANDING DETAIL)

NO SCALE

RSP ES-13B DATED APRIL 15, 2016 SUPERSEDES STANDARD PLAN ES-13B DATED MAY 20, 2011 - PAGE 492 OF THE STANDARD PLANS BOOK DATED 2010.

REVISED STANDARD PLAN RSP ES-13B

2010 REVISED STANDARD PLAN RSP ES-13B

1-12-16

Dist	COUNTY	ROUTE	POST MILES TOTAL PROJECT	SHEET No.	TOTAL SHEETS
07	LA	105,110	R6.6/R8.0 13.2/14.7	93	93

Theresa Gabriel
REGISTERED ELECTRICAL ENGINEER

October 30, 2015
PLANS APPROVAL DATE

REGISTERED PROFESSIONAL ENGINEER Theresa Aziz Gabriel No. E15129 Exp. 6-30-16 ELECTRICAL STATE OF CALIFORNIA

THE STATE OF CALIFORNIA OR ITS OFFICERS OR AGENTS SHALL NOT BE RESPONSIBLE FOR THE ACCURACY OR COMPLETENESS OF SCANNED COPIES OF THIS PLAN SHEET.

TO ACCOMPANY PLANS DATED 7-1-16

2010 REVISED STANDARD PLAN RSP ES-15D

NOTE:

Type SC1A, SC2A, SC3A controls are similar to Types SC1, SC2 and SC controls respectively except test switch and wiring are not required.

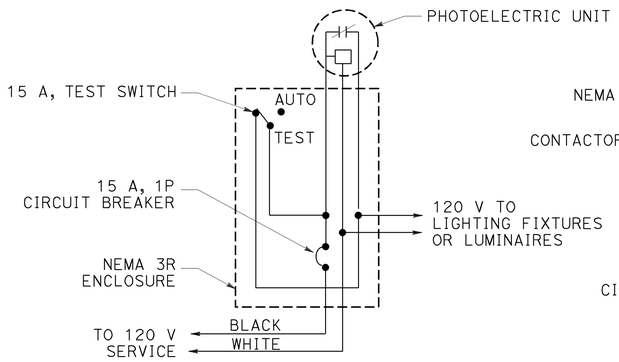

TYPE LC1 CONTROL

For 120 V unswitched circuit with no more than 1000 W load.

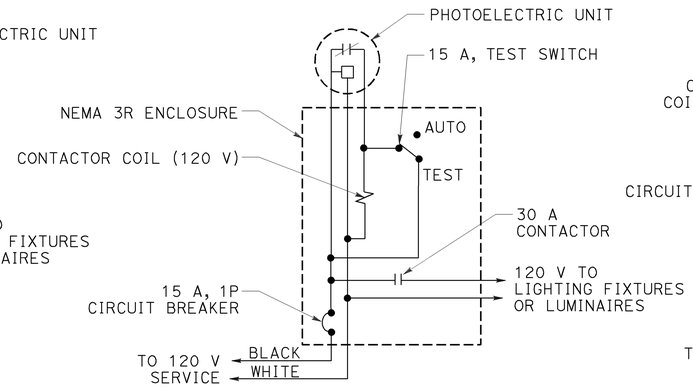

TYPE LC2 CONTROL

For 120 V unswitched circuit

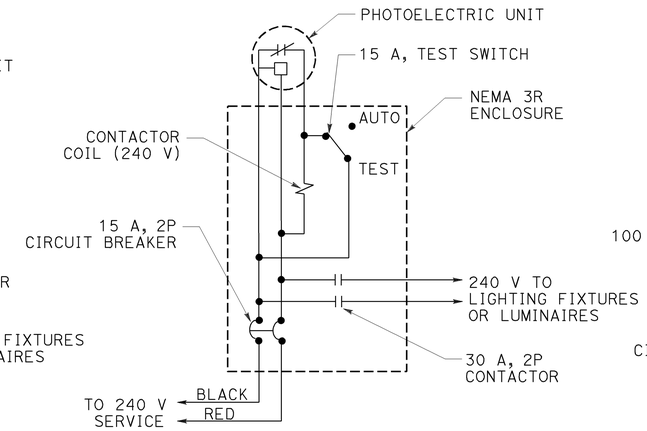

TYPE LC3 CONTROL

For 240 V unswitched circuits

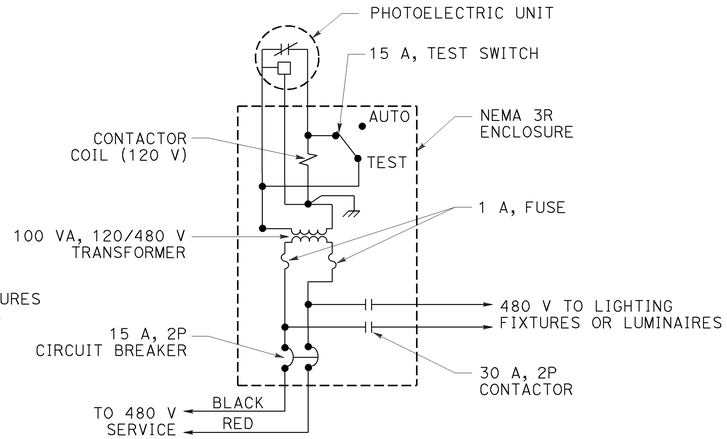

TYPE LC4 CONTROL

For 480 V unswitched circuits

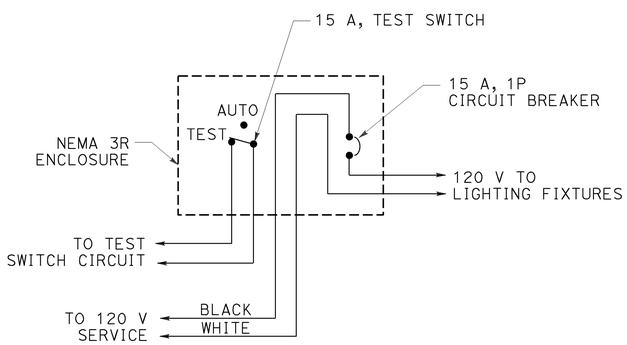

TYPE SC1 CONTROL

For 120 V switched circuit, see Note 1 for Type SC1A

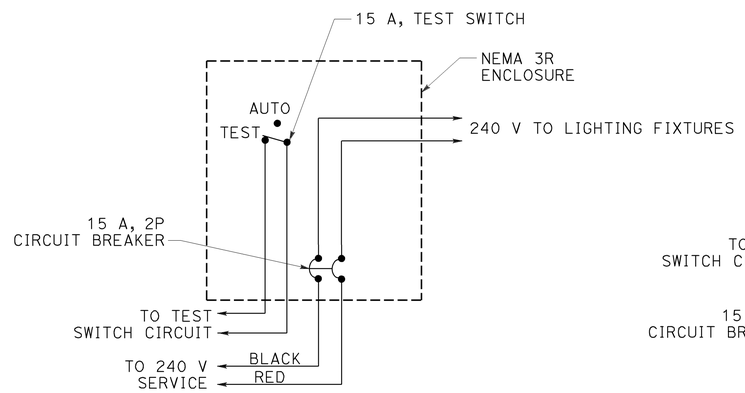

TYPE SC2 CONTROL

For 240 V switched circuit, see Note 1 for Type SC2A

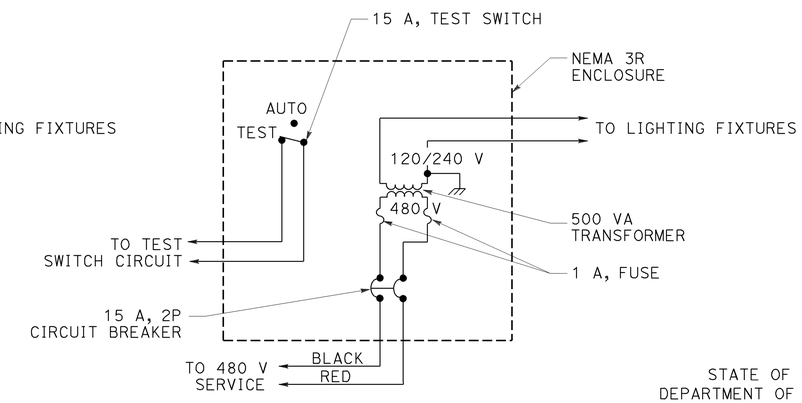

TYPE SC3 CONTROL

For 480 V switched sign circuit, see Note 1 for Type SC3A

STATE OF CALIFORNIA
DEPARTMENT OF TRANSPORTATION

ELECTRICAL SYSTEMS (LIGHTING AND SIGN ILLUMINATION CONTROL)

NO SCALE

RSP ES-15D DATED OCTOBER 30, 2015 SUPERSEDES STANDARD PLAN ES-15D DATED MAY 20, 2011 - PAGE 499 OF THE STANDARD PLANS BOOK DATED 2010.

REVISED STANDARD PLAN RSP ES-15D

8-20-15