Dist	COUNTY	ROUTE	POST MILES TOTAL PROJECT	SHEET No.	TOTAL SHEETS
07	LA	1	2.4/7.2	101	200

REGISTERED CIVIL ENGINEER 6/28/16 DATE

6-30-16
PLANS APPROVAL DATE

REGISTERED PROFESSIONAL ENGINEER
MOHAMMED HAIDER
No. 61335
Exp. 6/30/17
CIVIL
STATE OF CALIFORNIA

THE STATE OF CALIFORNIA OR ITS OFFICERS OR AGENTS SHALL NOT BE RESPONSIBLE FOR THE ACCURACY OR COMPLETENESS OF SCANNED COPIES OF THIS PLAN SHEET.

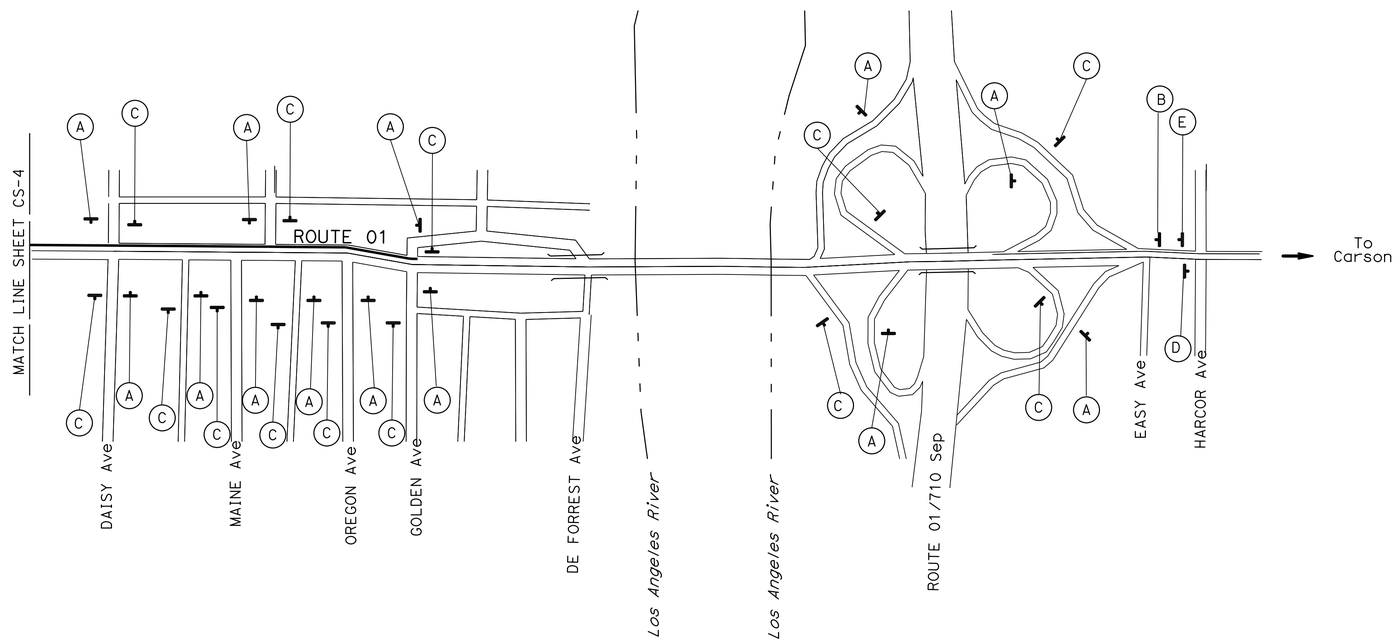

CONSTRUCTION AREA SIGNS

NO SCALE

APPROVED FOR CONSTRUCTION AREA SIGN WORK ONLY

CS-5

STATE OF CALIFORNIA - DEPARTMENT OF TRANSPORTATION
Caltrans® **TRAFFIC DESIGN**

FUNCTIONAL SUPERVISOR: MOHAMMED CHOWDHURY
CALCULATED-DESIGNED BY: MARISA MANDOCDOC
CHECKED BY: MOHAMMED HAIDER
REVISED BY
DATE REVISED

LAST REVISION 00-00-00
DATE PLOTTED => 07-SEP-2016
TIME PLOTTED => 12:27

Dist	COUNTY	ROUTE	POST MILES TOTAL PROJECT	SHEET No.	TOTAL SHEETS
07	LA	1	2.4/7.2	102	200

REGISTERED CIVIL ENGINEER 6/28/16 DATE

6-30-16
PLANS APPROVAL DATE

REGISTERED PROFESSIONAL ENGINEER MOHAMMED HAIDER No. 61335 Exp. 6/30/17 CIVIL STATE OF CALIFORNIA

THE STATE OF CALIFORNIA OR ITS OFFICERS OR AGENTS SHALL NOT BE RESPONSIBLE FOR THE ACCURACY OR COMPLETENESS OF SCANNED COPIES OF THIS PLAN SHEET.

NOTES:

1. FOR ACCURATE RIGHT OF WAY DATA, CONTACT RIGHT OF WAY ENGINEERING AT THE DISTRICT OFFICE.
2. LOCATIONS OF SIGNS SHOWN ARE APPROXIMATE.
   EXACT LOCATIONS WILL BE DETERMINED BY THE ENGINEER.
3. PEDESTRIAN ACCESS MUST BE MAINTAINED AT ALL TIMES.

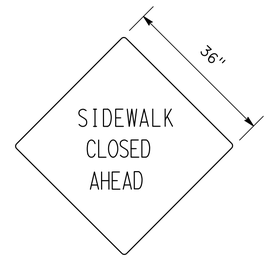

C20 (CA) (Mod)

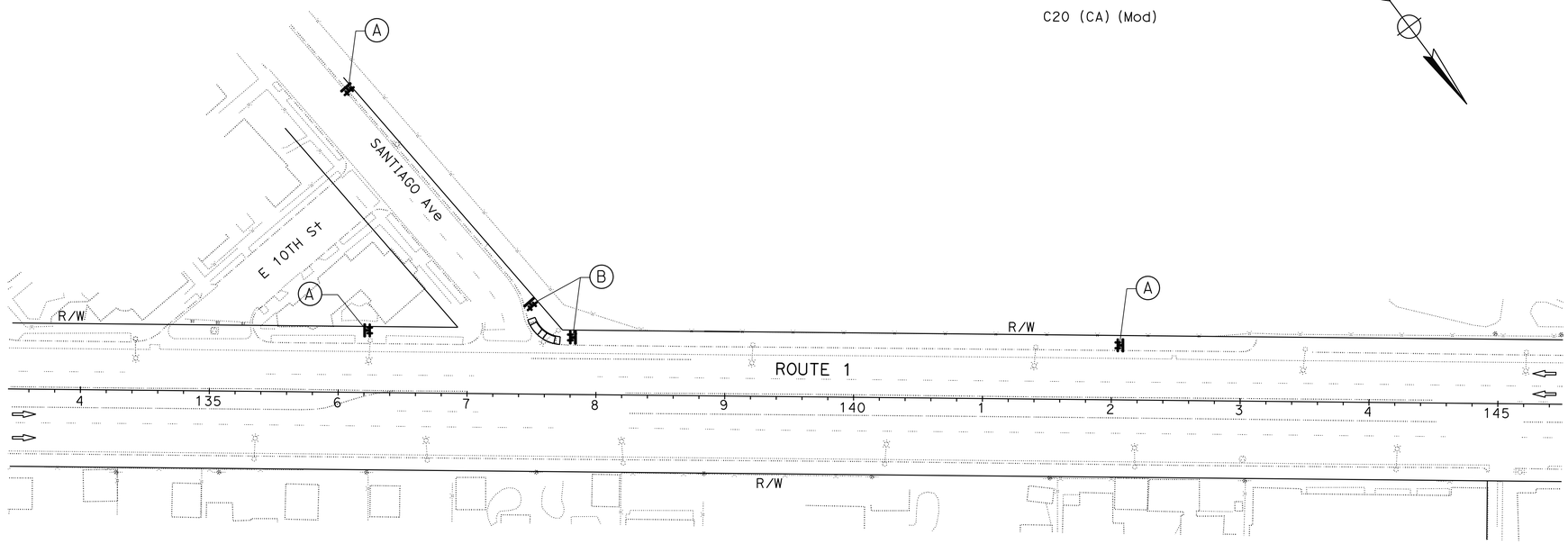

SIGN CODE LEGEND:

XXYY-Y: FEDERAL SIGN CODE PER MANUAL ON UNIFORM TRAFFIC CONTROL DEVICES (MUTCD)

XXYY-Y (CA): CALIFORNIA SIGN CODE PER CALIFORNIA MUTCD

LEGENDS

WORK AREA

BARRICADE (TYPE II) WITH SIGN

DIRECTION OF TRAFFIC

TRAFFIC HANDLING (PEDESTRIAN) WORK SIGNS			
SIGN NUMCER	SIGN CODE	PANEL SIZE	SIGN MESSAGE
A	C20 (CA) (Mod)	36" x 36"	SIDEWALK CLOSED AHEAD
B	R9-9	24" x 12"	SIDEWALK CLOSED

APPROVED FOR TRAFFIC HANDLING (PEDESTRIAN) WORK ONLY

TRAFFIC HANDLING PLAN (PEDESTRIAN)

NO SCALE

TH-1

STATE OF CALIFORNIA - DEPARTMENT OF TRANSPORTATION
Caltrans® TRAFFIC DESIGN

FUNCTIONAL SUPERVISOR: MOHAMMED CHOWDHURY
CALCULATED-DESIGNED BY: MARISA MANDOCDOC
CHECKED BY: MOHAMMED HAIDER
REVISED BY
DATE REVISED

LAST REVISION 00-00-00
DATE PLOTTED => 07-SEP-2016
TIME PLOTTED => 12:27

Dist	COUNTY	ROUTE	POST MILES TOTAL PROJECT	SHEET No.	TOTAL SHEETS
07	LA	1	2.4/7.2	103	200

REGISTERED CIVIL ENGINEER 6/28/16 DATE

6-30-16
PLANS APPROVAL DATE

REGISTERED PROFESSIONAL ENGINEER
MOHAMMED HAIDER
No. 61335
Exp. 6/30/17
CIVIL
STATE OF CALIFORNIA

THE STATE OF CALIFORNIA OR ITS OFFICERS OR AGENTS SHALL NOT BE RESPONSIBLE FOR THE ACCURACY OR COMPLETENESS OF SCANNED COPIES OF THIS PLAN SHEET.

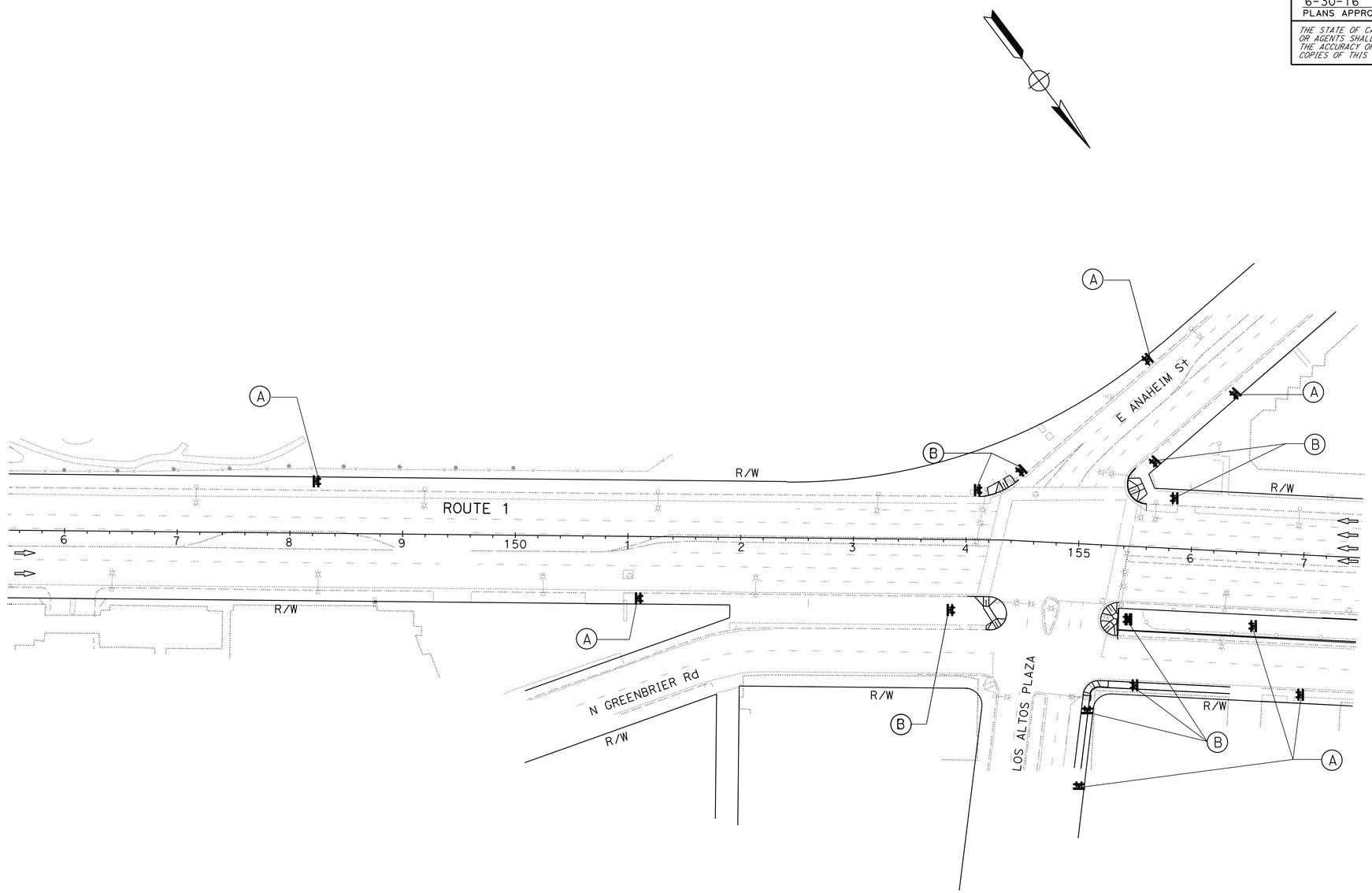

TRAFFIC HANDLING PLAN (PEDESTRIAN)

NO SCALE

APPROVED FOR TRAFFIC HANDLING (PEDESTRIAN) WORK ONLY

TH-2

REVISED BY	
DATE REVISED	
CALCULATED-DESIGNED BY	MARISA MANDOCDOC
CHECKED BY	MOHAMMED HAIDER
FUNCTIONAL SUPERVISOR	MOHAMMED CHOWDHURY

STATE OF CALIFORNIA - DEPARTMENT OF TRANSPORTATION
Caltrans® **TRAFFIC DESIGN**

LAST REVISION 00-00-00
DATE PLOTTED => 07-SEP-2016
TIME PLOTTED => 12:27

Dist	COUNTY	ROUTE	POST MILES TOTAL PROJECT	SHEET No.	TOTAL SHEETS
07	LA	1	2.4/7.2	104	200

REGISTERED CIVIL ENGINEER 6/28/16 DATE

6-30-16
PLANS APPROVAL DATE

REGISTERED PROFESSIONAL ENGINEER
MOHAMMED HAIDER
No. 61335
Exp. 6/30/17
CIVIL
STATE OF CALIFORNIA

THE STATE OF CALIFORNIA OR ITS OFFICERS OR AGENTS SHALL NOT BE RESPONSIBLE FOR THE ACCURACY OR COMPLETENESS OF SCANNED COPIES OF THIS PLAN SHEET.

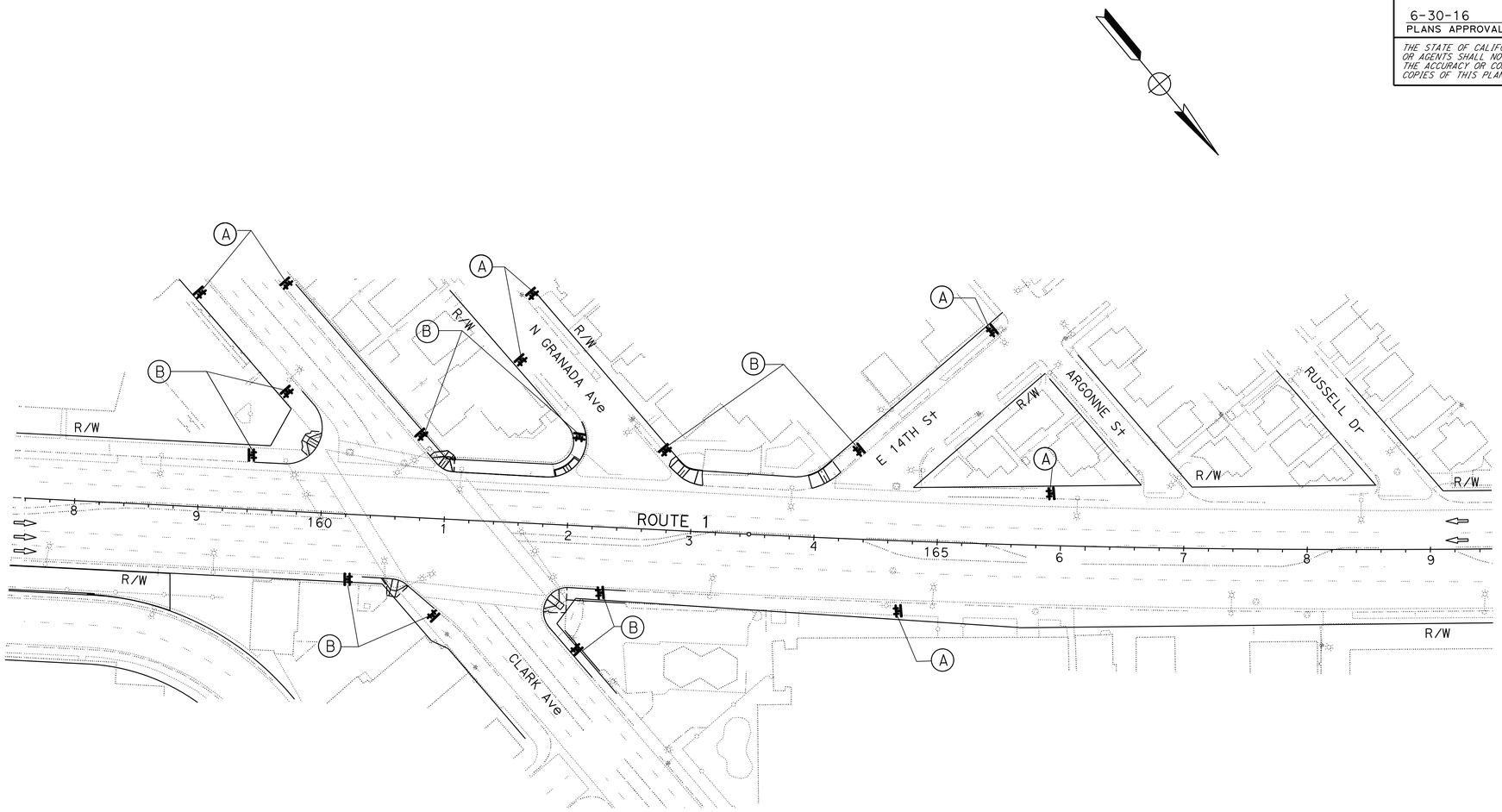

APPROVED FOR TRAFFIC HANDLING (PEDESTRIAN) WORK ONLY

TRAFFIC HANDLING PLAN (PEDESTRIAN)

NO SCALE

TH-3

STATE OF CALIFORNIA - DEPARTMENT OF TRANSPORTATION
Caltrans® **TRAFFIC DESIGN**

FUNCTIONAL SUPERVISOR: MOHAMMED CHOWDHURY
CALCULATED-DESIGNED BY: MARISA MANDOCDOC
CHECKED BY: MOHAMMED HAIDER
REVISED BY
DATE REVISED

LAST REVISION 00-00-00
DATE PLOTTED => 07-SEP-2016
TIME PLOTTED => 12:27

Dist	COUNTY	ROUTE	POST MILES TOTAL PROJECT	SHEET No.	TOTAL SHEETS
07	LA	1	2.4/7.2	105	200

REGISTERED CIVIL ENGINEER 6/28/16 DATE

6-30-16
PLANS APPROVAL DATE

REGISTERED PROFESSIONAL ENGINEER
MOHAMMED HAIDER
No. 61335
Exp. 6/30/17
CIVIL
STATE OF CALIFORNIA

THE STATE OF CALIFORNIA OR ITS OFFICERS OR AGENTS SHALL NOT BE RESPONSIBLE FOR THE ACCURACY OR COMPLETENESS OF SCANNED COPIES OF THIS PLAN SHEET.

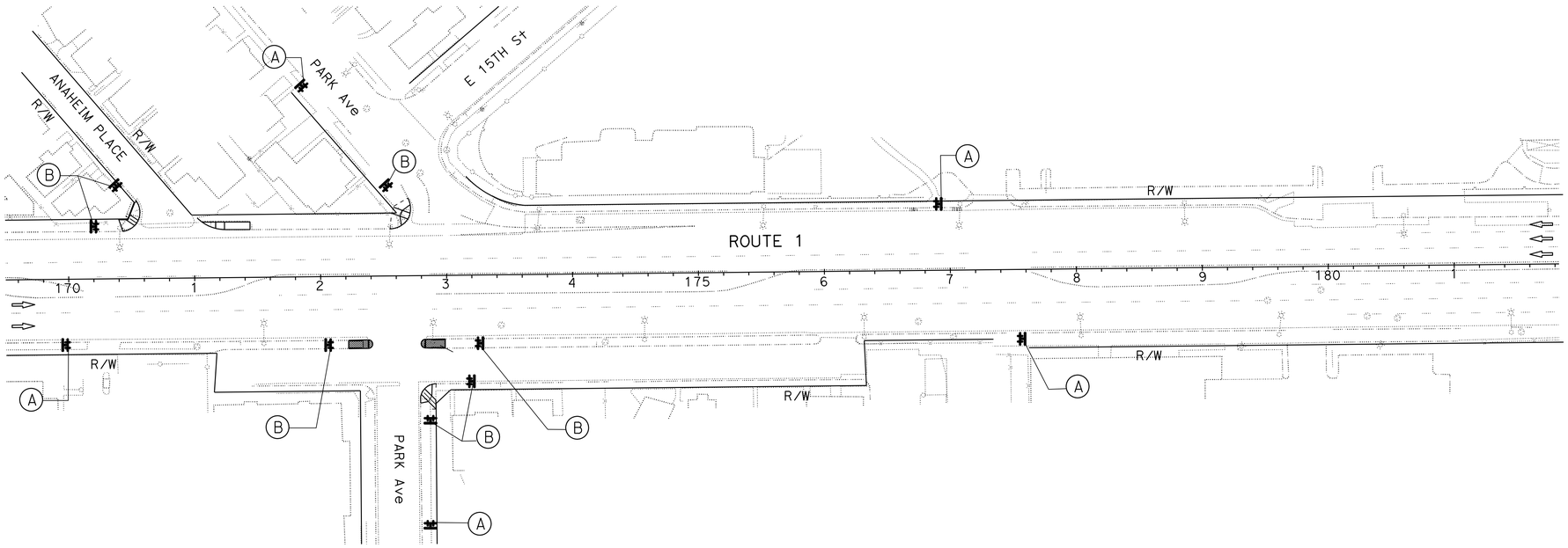

TRAFFIC HANDLING PLAN (PEDESTRIAN)

NO SCALE

APPROVED FOR TRAFFIC HANDLING (PEDESTRIAN) WORK ONLY

TH-4

STATE OF CALIFORNIA - DEPARTMENT OF TRANSPORTATION
Caltrans® **TRAFFIC DESIGN**

FUNCTIONAL SUPERVISOR: MOHAMMED CHOWDHURY
CALCULATED-DESIGNED BY: MARISA MANDOCDOC
CHECKED BY: MOHAMMED HAIDER
REVISED BY
DATE REVISED

LAST REVISION 00-00-00
DATE PLOTTED => 07-SEP-2016
TIME PLOTTED => 12:27

Dist	COUNTY	ROUTE	POST MILES TOTAL PROJECT	SHEET No.	TOTAL SHEETS
07	LA	1	2.4/7.2	106	200

REGISTERED CIVIL ENGINEER 6/28/16 DATE

6-30-16
PLANS APPROVAL DATE

REGISTERED PROFESSIONAL ENGINEER
MOHAMMED HAIDER
No. 61335
Exp. 6/30/17
CIVIL
STATE OF CALIFORNIA

THE STATE OF CALIFORNIA OR ITS OFFICERS OR AGENTS SHALL NOT BE RESPONSIBLE FOR THE ACCURACY OR COMPLETENESS OF SCANNED COPIES OF THIS PLAN SHEET.

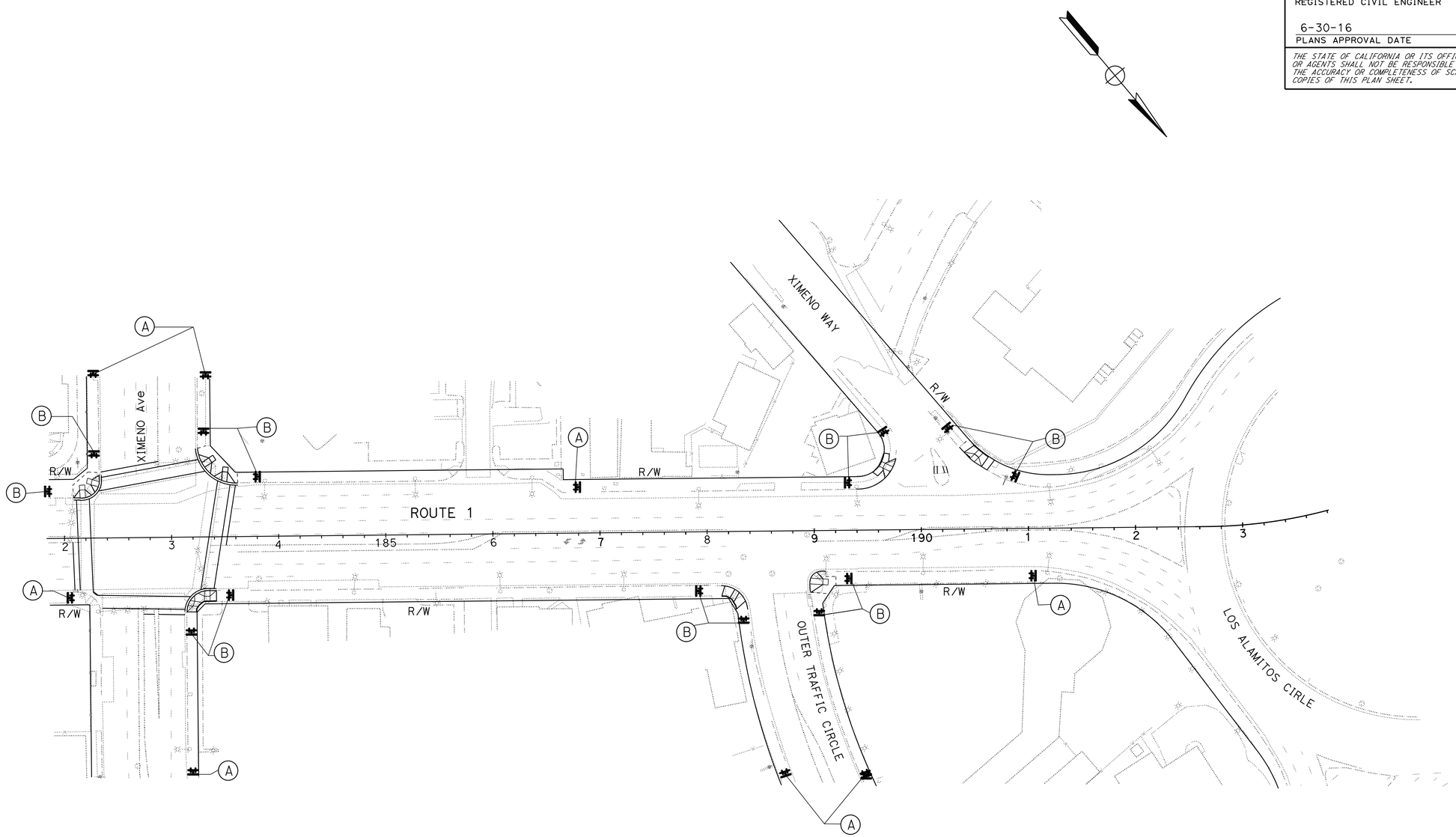

TRAFFIC HANDLING PLAN (PEDESTRIAN)

NO SCALE

APPROVED FOR TRAFFIC HANDLING (PEDESTRIAN) WORK ONLY

TH-5

STATE OF CALIFORNIA - DEPARTMENT OF TRANSPORTATION
Caltrans® **TRAFFIC DESIGN**

FUNCTIONAL SUPERVISOR: MOHAMMED CHOWDHURY
CALCULATED-DESIGNED BY: MARISA MANDOCDOC
CHECKED BY: MOHAMMED HAIDER
REVISED BY
DATE REVISED

LAST REVISION 00-00-00
DATE PLOTTED => 07-SEP-2016
TIME PLOTTED => 12:27

Dist	COUNTY	ROUTE	POST MILES TOTAL PROJECT	SHEET No.	TOTAL SHEETS
07	LA	1	2.4/7.2	107	200

REGISTERED CIVIL ENGINEER 6/28/16 DATE

6-30-16
PLANS APPROVAL DATE

REGISTERED PROFESSIONAL ENGINEER
MOHAMMED HAIDER
No. 61335
Exp. 6/30/17
CIVIL
STATE OF CALIFORNIA

THE STATE OF CALIFORNIA OR ITS OFFICERS OR AGENTS SHALL NOT BE RESPONSIBLE FOR THE ACCURACY OR COMPLETENESS OF SCANNED COPIES OF THIS PLAN SHEET.

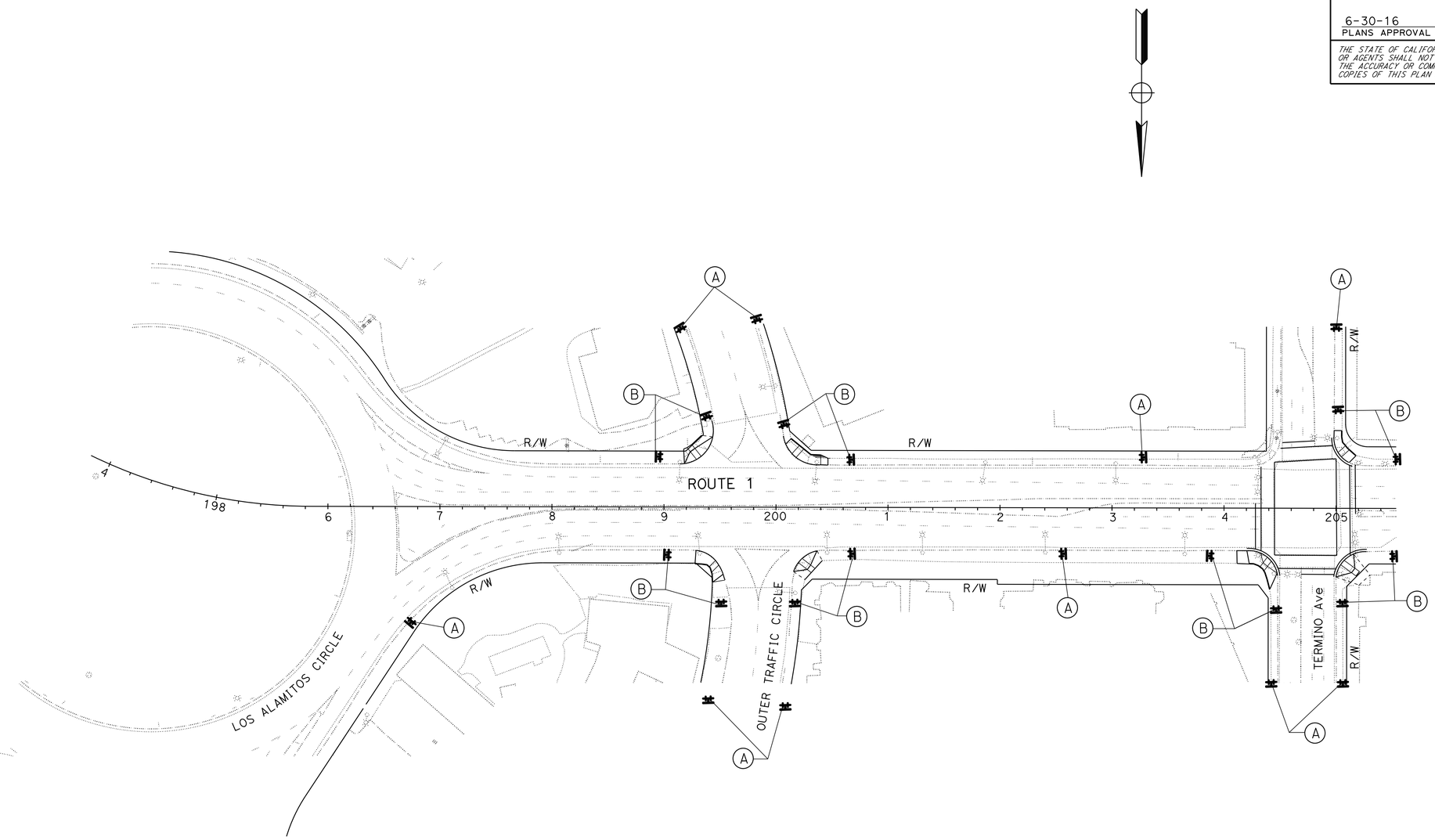

TRAFFIC HANDLING PLAN (PEDESTRIAN)

NO SCALE

APPROVED FOR TRAFFIC HANDLING (PEDESTRIAN) WORK ONLY

TH-6

STATE OF CALIFORNIA - DEPARTMENT OF TRANSPORTATION
Caltrans® **TRAFFIC DESIGN**

FUNCTIONAL SUPERVISOR: MOHAMMED CHOWDHURY
CALCULATED-DESIGNED BY: MARISA MANDOCDOC
CHECKED BY: MOHAMMED HAIDER
REVISED BY
DATE REVISED

LAST REVISION 00-00-00
DATE PLOTTED => 07-SEP-2016
TIME PLOTTED => 12:27

BORDER LAST REVISED 7/2/2010
USERNAME => s115484
DGN FILE => 729080md006.dgn
RELATIVE BORDER SCALE IS IN INCHES 0 1 2 3
UNIT 2124
PROJECT NUMBER & PHASE 07120000751

Dist	COUNTY	ROUTE	POST MILES TOTAL PROJECT	SHEET No.	TOTAL SHEETS
07	LA	1	2.4/7.2	108	200

REGISTERED CIVIL ENGINEER 6/28/16 DATE

6-30-16
PLANS APPROVAL DATE

REGISTERED PROFESSIONAL ENGINEER
MOHAMMED HAIDER
No. 61335
Exp. 6/30/17
CIVIL
STATE OF CALIFORNIA

THE STATE OF CALIFORNIA OR ITS OFFICERS OR AGENTS SHALL NOT BE RESPONSIBLE FOR THE ACCURACY OR COMPLETENESS OF SCANNED COPIES OF THIS PLAN SHEET.

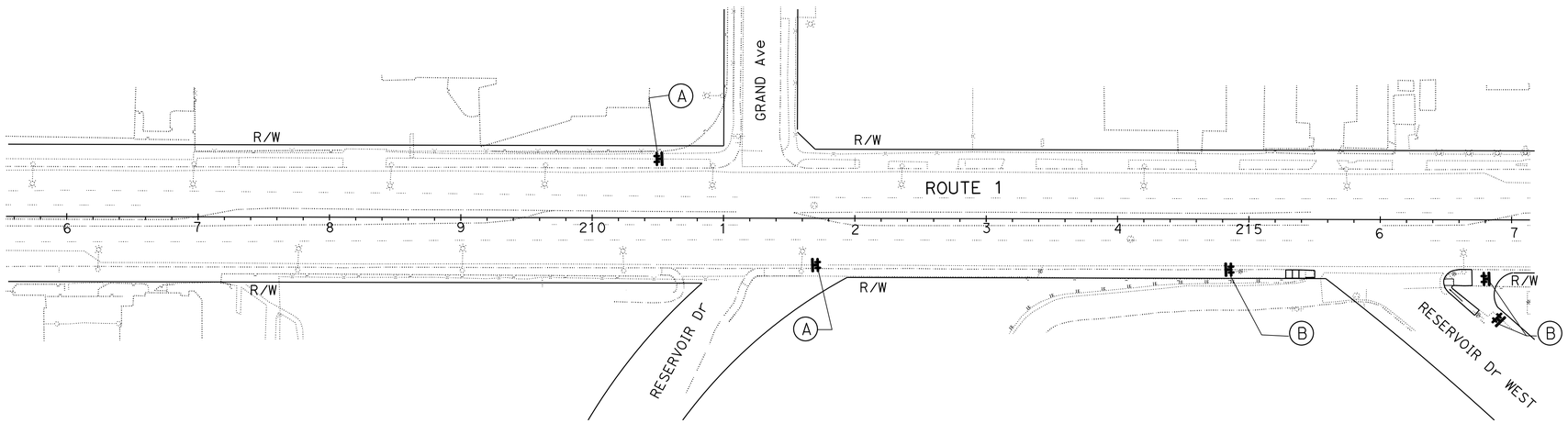

TRAFFIC HANDLING PLAN (PEDESTRIAN)

NO SCALE

APPROVED FOR TRAFFIC HANDLING (PEDESTRIAN) WORK ONLY

TH-7

STATE OF CALIFORNIA - DEPARTMENT OF TRANSPORTATION
Caltrans® **TRAFFIC DESIGN**

FUNCTIONAL SUPERVISOR: MOHAMMED CHOWDHURY

CALCULATED-DESIGNED BY: MARISA MANDOCDOC
CHECKED BY: MOHAMMED HAIDER

REVISED BY
DATE REVISED

LAST REVISION 00-00-00
DATE PLOTTED => 07-SEP-2016
TIME PLOTTED => 12:27

Dist	COUNTY	ROUTE	POST MILES TOTAL PROJECT	SHEET No.	TOTAL SHEETS
07	LA	1	2.4/7.2	109	200

REGISTERED CIVIL ENGINEER 6/28/16 DATE

6-30-16
PLANS APPROVAL DATE

REGISTERED PROFESSIONAL ENGINEER
MOHAMMED HAIDER
No. 61335
Exp. 6/30/17
CIVIL
STATE OF CALIFORNIA

THE STATE OF CALIFORNIA OR ITS OFFICERS OR AGENTS SHALL NOT BE RESPONSIBLE FOR THE ACCURACY OR COMPLETENESS OF SCANNED COPIES OF THIS PLAN SHEET.

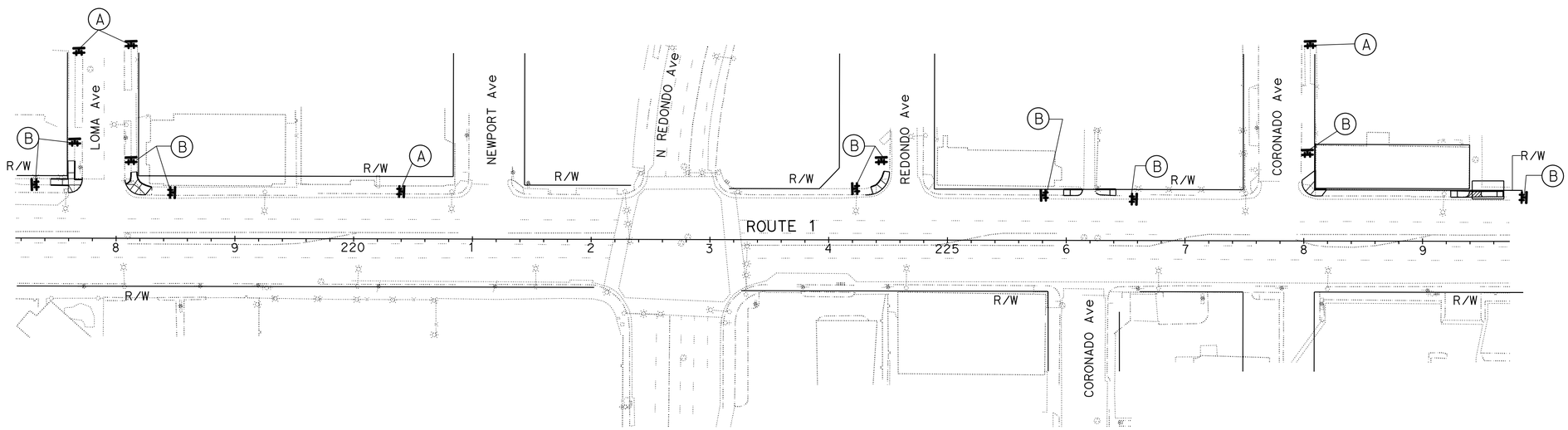

TRAFFIC HANDLING PLAN (PEDESTRIAN)

NO SCALE

APPROVED FOR TRAFFIC HANDLING (PEDESTRIAN) WORK ONLY

TH-8

STATE OF CALIFORNIA - DEPARTMENT OF TRANSPORTATION
Caltrans® **TRAFFIC DESIGN**

FUNCTIONAL SUPERVISOR: MOHAMMED CHOWDHURY

CALCULATED-DESIGNED BY: MARISA MANDOCDOC
CHECKED BY: MOHAMMED HAIDER

REVISED BY
DATE REVISED

LAST REVISION 00-00-00
DATE PLOTTED => 07-SEP-2016
TIME PLOTTED => 12:27

Dist	COUNTY	ROUTE	POST MILES TOTAL PROJECT	SHEET No.	TOTAL SHEETS
07	LA	1	2.4/7.2	110	200

REGISTERED CIVIL ENGINEER 6/28/16 DATE

6-30-16
PLANS APPROVAL DATE

REGISTERED PROFESSIONAL ENGINEER
MOHAMMED HAIDER
No. 61335
Exp. 6/30/17
CIVIL
STATE OF CALIFORNIA

THE STATE OF CALIFORNIA OR ITS OFFICERS OR AGENTS SHALL NOT BE RESPONSIBLE FOR THE ACCURACY OR COMPLETENESS OF SCANNED COPIES OF THIS PLAN SHEET.

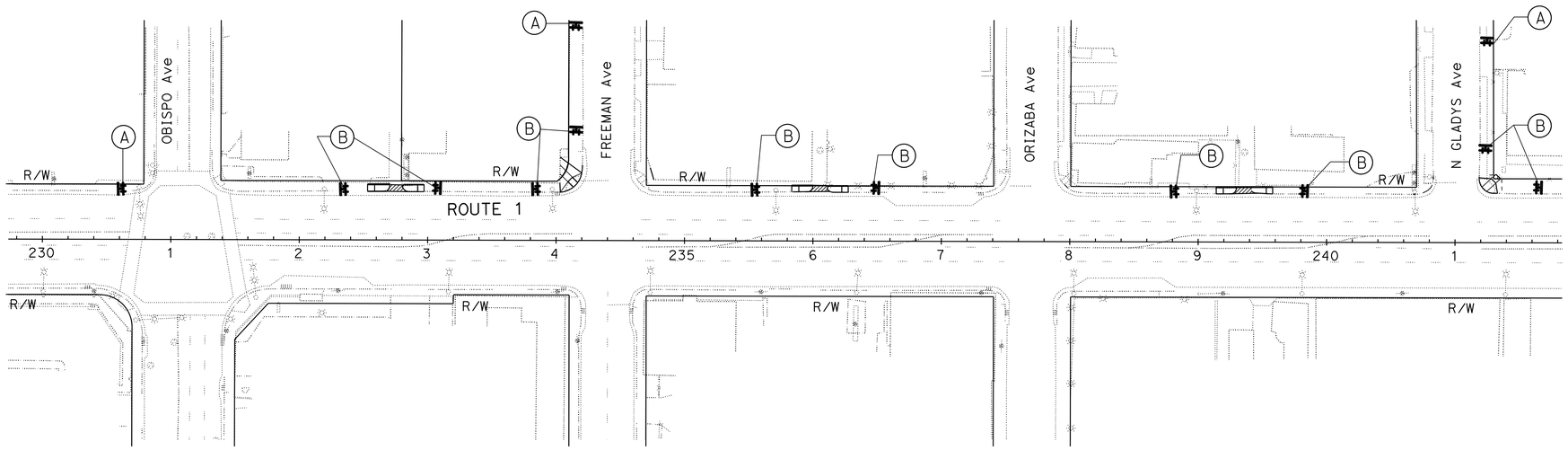

TRAFFIC HANDLING PLAN (PEDESTRIAN)

NO SCALE

APPROVED FOR TRAFFIC HANDLING (PEDESTRIAN) WORK ONLY

TH-9

REVISED BY	DATE REVISED

CALCULATED-DESIGNED BY: MARISA MANDOCDOC
CHECKED BY: MOHAMMED HAIDER

FUNCTIONAL SUPERVISOR: MOHAMMED CHOWDHURY

STATE OF CALIFORNIA - DEPARTMENT OF TRANSPORTATION
Caltrans® TRAFFIC DESIGN

LAST REVISION 00-00-00
DATE PLOTTED => 07-SEP-2016
TIME PLOTTED => 12:27

Dist	COUNTY	ROUTE	POST MILES TOTAL PROJECT	SHEET No.	TOTAL SHEETS
07	LA	1	2.4/7.2	111	200

REGISTERED CIVIL ENGINEER 6/28/16 DATE

6-30-16
PLANS APPROVAL DATE

REGISTERED PROFESSIONAL ENGINEER
MOHAMMED HAIDER
No. 61335
Exp. 6/30/17
CIVIL
STATE OF CALIFORNIA

THE STATE OF CALIFORNIA OR ITS OFFICERS OR AGENTS SHALL NOT BE RESPONSIBLE FOR THE ACCURACY OR COMPLETENESS OF SCANNED COPIES OF THIS PLAN SHEET.

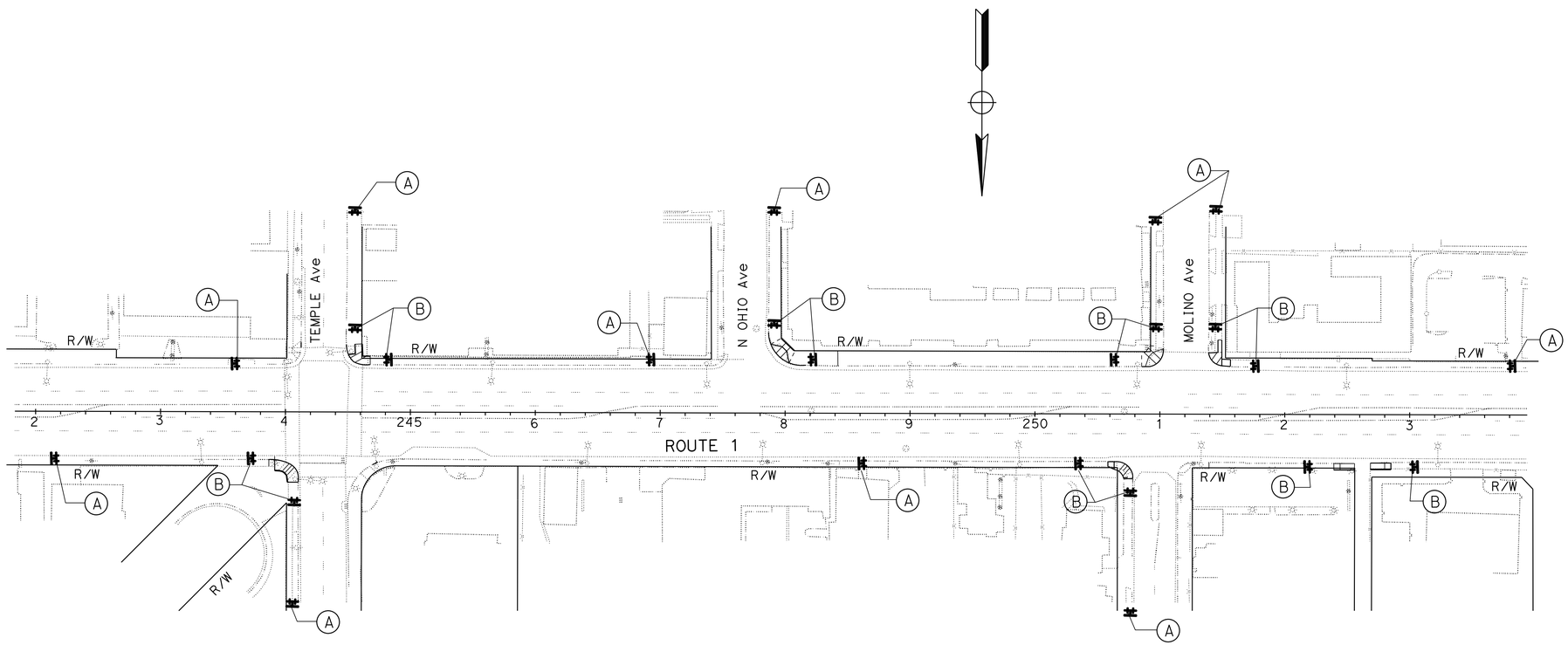

TRAFFIC HANDLING PLAN (PEDESTRIAN)

NO SCALE

APPROVED FOR TRAFFIC HANDLING (PEDESTRIAN) WORK ONLY

TH-10

STATE OF CALIFORNIA - DEPARTMENT OF TRANSPORTATION
Caltrans® **TRAFFIC DESIGN**

FUNCTIONAL SUPERVISOR: MOHAMMED CHOWDHURY

CALCULATED-DESIGNED BY: MARISA MANDOCDOC
CHECKED BY: MOHAMMED HAIDER

REVISED BY
DATE REVISED

LAST REVISION 00-00-00
DATE PLOTTED => 07-SEP-2016
TIME PLOTTED => 12:27

Dist	COUNTY	ROUTE	POST MILES TOTAL PROJECT	SHEET No.	TOTAL SHEETS
07	LA	1	2.4/7.2	112	200

REGISTERED CIVIL ENGINEER 6/28/16 DATE

6-30-16
PLANS APPROVAL DATE

REGISTERED PROFESSIONAL ENGINEER MOHAMMED HAIDER No. 61335 Exp. 6/30/17 CIVIL STATE OF CALIFORNIA

THE STATE OF CALIFORNIA OR ITS OFFICERS OR AGENTS SHALL NOT BE RESPONSIBLE FOR THE ACCURACY OR COMPLETENESS OF SCANNED COPIES OF THIS PLAN SHEET.

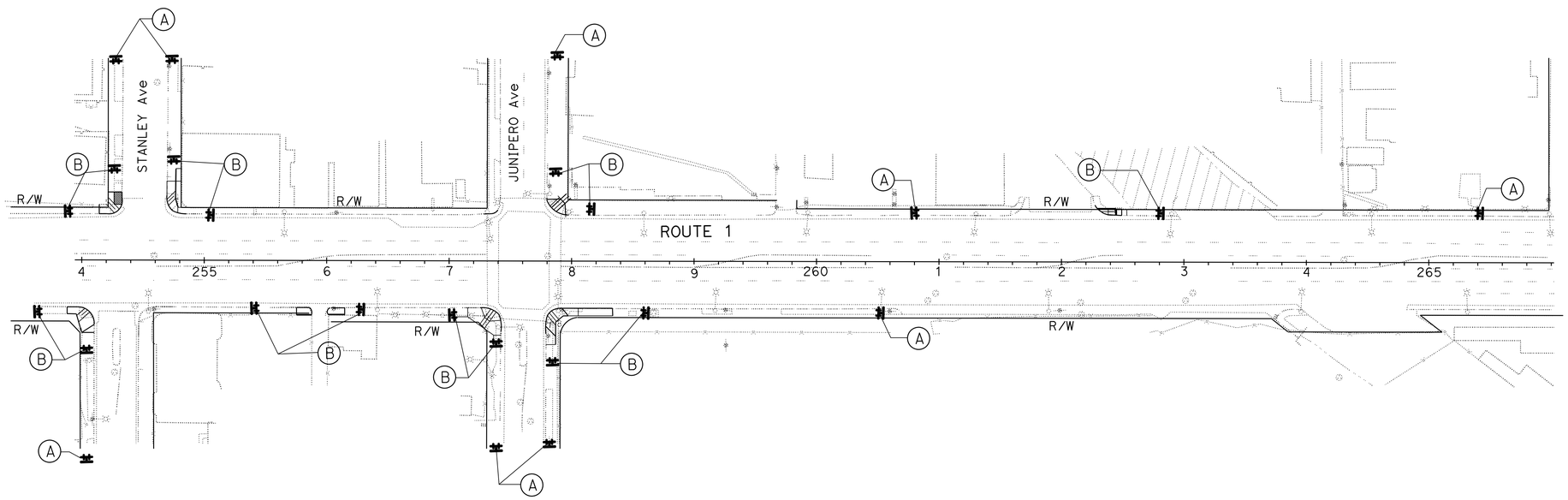

TRAFFIC HANDLING PLAN (PEDESTRIAN)

NO SCALE

APPROVED FOR TRAFFIC HANDLING (PEDESTRIAN) WORK ONLY

TH-11

CALCULATED-DESIGNED BY	MARISA MANDOCDOC
CHECKED BY	MOHAMMED HAIDER
REVISED BY	
DATE REVISED	
FUNCTIONAL SUPERVISOR	MOHAMMED CHOWDHURY

STATE OF CALIFORNIA - DEPARTMENT OF TRANSPORTATION
Caltrans® **TRAFFIC DESIGN**

LAST REVISION 00-00-00 | DATE PLOTTED => 07-SEP-2016 | TIME PLOTTED => 12:27

Dist	COUNTY	ROUTE	POST MILES TOTAL PROJECT	SHEET No.	TOTAL SHEETS
07	LA	1	2.4/7.2	113	200

REGISTERED CIVIL ENGINEER 6/28/16 DATE

6-30-16
PLANS APPROVAL DATE

REGISTERED PROFESSIONAL ENGINEER
MOHAMMED HAIDER
No. 61335
Exp. 6/30/17
CIVIL
STATE OF CALIFORNIA

THE STATE OF CALIFORNIA OR ITS OFFICERS OR AGENTS SHALL NOT BE RESPONSIBLE FOR THE ACCURACY OR COMPLETENESS OF SCANNED COPIES OF THIS PLAN SHEET.

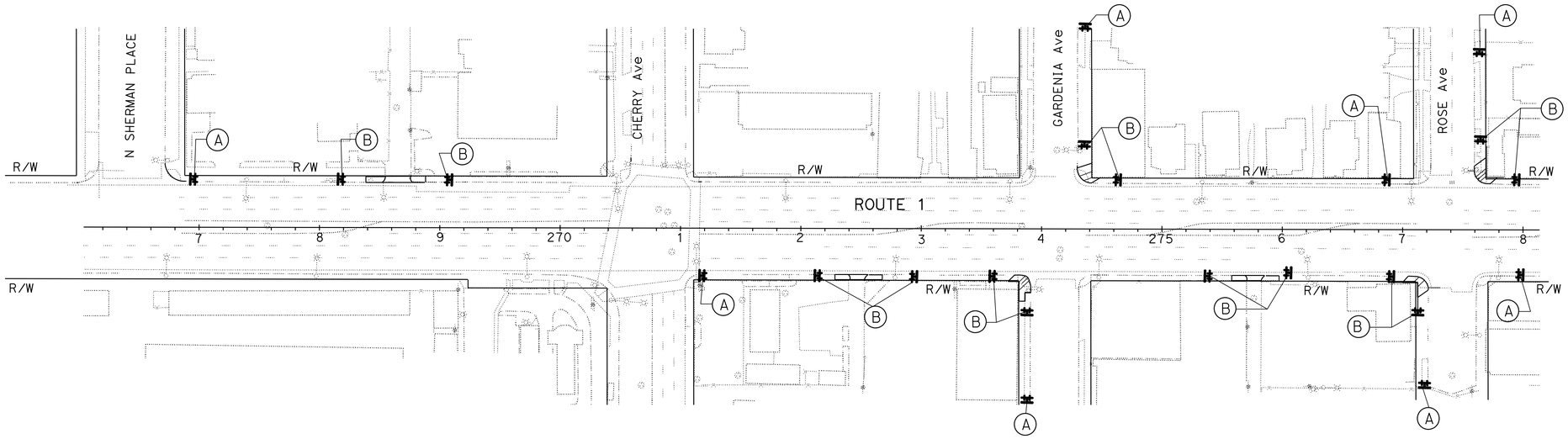

APPROVED FOR TRAFFIC HANDLING (PEDESTRIAN) WORK ONLY

TRAFFIC HANDLING PLAN (PEDESTRIAN)

NO SCALE

TH-12

REVISED BY	
DATE REVISED	
CALCULATED-DESIGNED BY	MARISA MANDOCDOC
CHECKED BY	MOHAMMED HAIDER
FUNCTIONAL SUPERVISOR	MOHAMMED CHOWDHURY

STATE OF CALIFORNIA - DEPARTMENT OF TRANSPORTATION
Caltrans® **TRAFFIC DESIGN**

LAST REVISION 00-00-00 | DATE PLOTTED => 07-SEP-2016 | TIME PLOTTED => 12:27

Dist	COUNTY	ROUTE	POST MILES TOTAL PROJECT	SHEET No.	TOTAL SHEETS
07	LA	1	2.4/7.2	114	200

REGISTERED CIVIL ENGINEER 6/28/16 DATE

6-30-16
PLANS APPROVAL DATE

REGISTERED PROFESSIONAL ENGINEER
MOHAMMED HAIDER
No. 61335
Exp. 6/30/17
CIVIL
STATE OF CALIFORNIA

THE STATE OF CALIFORNIA OR ITS OFFICERS OR AGENTS SHALL NOT BE RESPONSIBLE FOR THE ACCURACY OR COMPLETENESS OF SCANNED COPIES OF THIS PLAN SHEET.

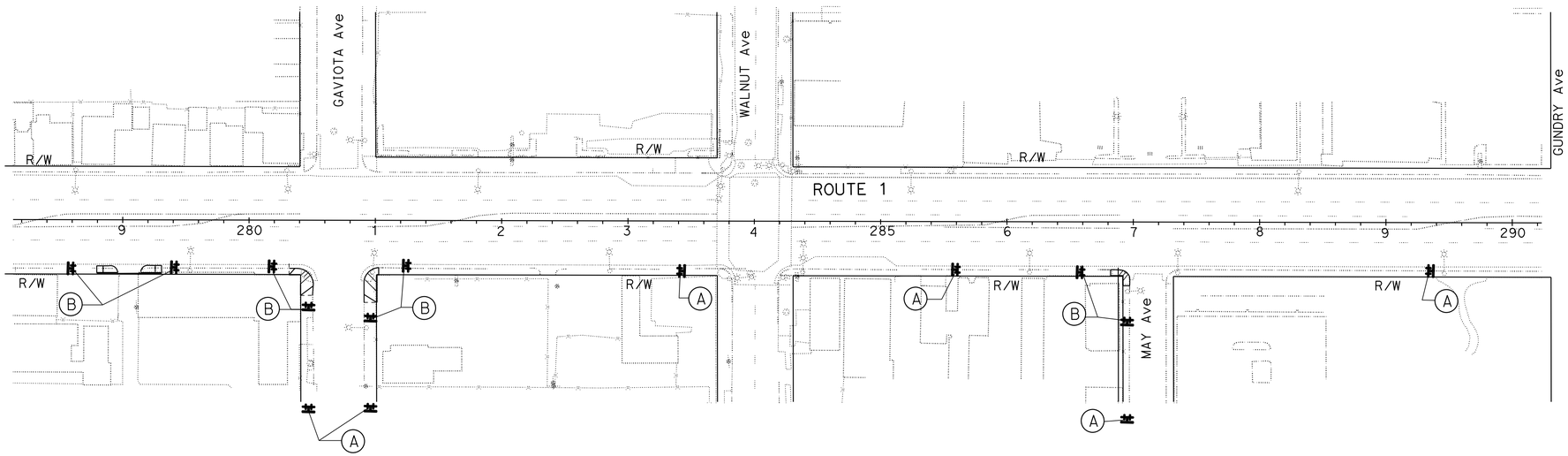

TRAFFIC HANDLING PLAN (PEDESTRIAN)

NO SCALE

APPROVED FOR TRAFFIC HANDLING (PEDESTRIAN) WORK ONLY

TH-13

STATE OF CALIFORNIA - DEPARTMENT OF TRANSPORTATION
Caltrans® **TRAFFIC DESIGN**

FUNCTIONAL SUPERVISOR: MOHAMMED CHOWDHURY

CALCULATED-DESIGNED BY: MARISA MANDOCDOC
CHECKED BY: MOHAMMED HAIDER

REVISED BY
DATE REVISED

LAST REVISION 00-00-00
DATE PLOTTED => 07-SEP-2016
TIME PLOTTED => 12:27

Dist	COUNTY	ROUTE	POST MILES TOTAL PROJECT	SHEET No.	TOTAL SHEETS
07	LA	1	2.4/7.2	115	200

REGISTERED CIVIL ENGINEER 6/28/16 DATE

6-30-16
PLANS APPROVAL DATE

REGISTERED PROFESSIONAL ENGINEER
MOHAMMED HAIDER
No. 61335
Exp. 6/30/17
CIVIL
STATE OF CALIFORNIA

THE STATE OF CALIFORNIA OR ITS OFFICERS OR AGENTS SHALL NOT BE RESPONSIBLE FOR THE ACCURACY OR COMPLETENESS OF SCANNED COPIES OF THIS PLAN SHEET.

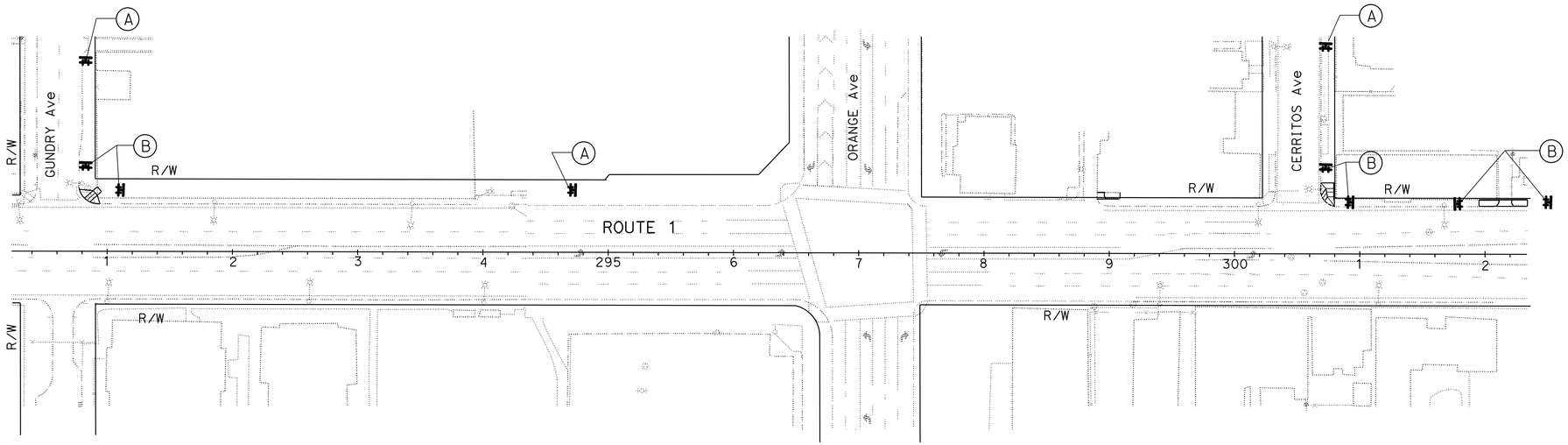

TRAFFIC HANDLING PLAN (PEDESTRIAN)

NO SCALE

APPROVED FOR TRAFFIC HANDLING (PEDESTRIAN) WORK ONLY

TH-14

STATE OF CALIFORNIA - DEPARTMENT OF TRANSPORTATION
Caltrans® **TRAFFIC DESIGN**

FUNCTIONAL SUPERVISOR: MOHAMMED CHOWDHURY

CALCULATED-DESIGNED BY: MARISA MANDOCDOC
CHECKED BY: MOHAMMED HAIDER

REVISED BY
DATE REVISED

LAST REVISION 00-00-00
DATE PLOTTED => 07-SEP-2016
TIME PLOTTED => 12:27

Dist	COUNTY	ROUTE	POST MILES TOTAL PROJECT	SHEET No.	TOTAL SHEETS
07	LA	1	2.4/7.2	116	200

REGISTERED CIVIL ENGINEER 6/28/16 DATE

6-30-16
PLANS APPROVAL DATE

REGISTERED PROFESSIONAL ENGINEER
MOHAMMED HAIDER
No. 61335
Exp. 6/30/17
CIVIL
STATE OF CALIFORNIA

THE STATE OF CALIFORNIA OR ITS OFFICERS OR AGENTS SHALL NOT BE RESPONSIBLE FOR THE ACCURACY OR COMPLETENESS OF SCANNED COPIES OF THIS PLAN SHEET.

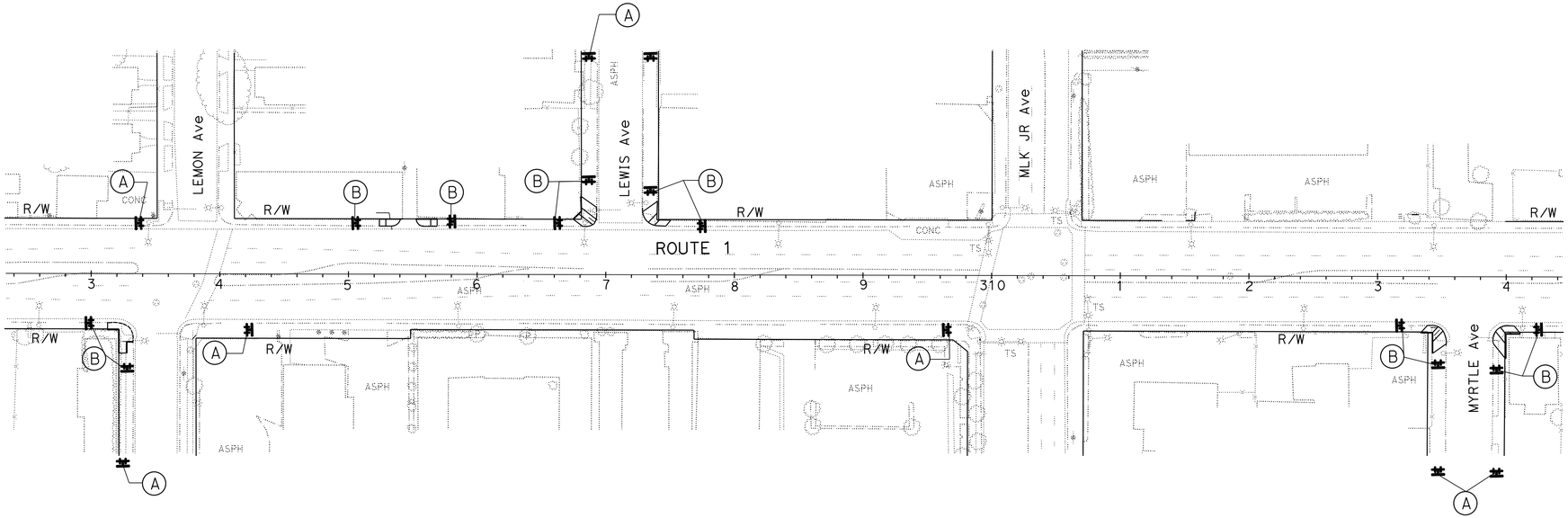

TRAFFIC HANDLING PLAN (PEDESTRIAN)

NO SCALE

APPROVED FOR TRAFFIC HANDLING (PEDESTRIAN) WORK ONLY

TH-15

REVISED BY	
DATE REVISED	
CALCULATED-DESIGNED BY	MARISA MANDOCDOC
CHECKED BY	MOHAMMED HAIDER
FUNCTIONAL SUPERVISOR	MOHAMMED CHOWDHURY

STATE OF CALIFORNIA - DEPARTMENT OF TRANSPORTATION
Caltrans® **TRAFFIC DESIGN**

LAST REVISION 00-00-00
DATE PLOTTED => 07-SEP-2016
TIME PLOTTED => 12:27

Dist	COUNTY	ROUTE	POST MILES TOTAL PROJECT	SHEET No.	TOTAL SHEETS
07	LA	1	2.4/7.2	117	200

REGISTERED CIVIL ENGINEER 6/28/16 DATE

6-30-16
PLANS APPROVAL DATE

REGISTERED PROFESSIONAL ENGINEER
MOHAMMED HAIDER
No. 61335
Exp. 6/30/17
CIVIL
STATE OF CALIFORNIA

THE STATE OF CALIFORNIA OR ITS OFFICERS OR AGENTS SHALL NOT BE RESPONSIBLE FOR THE ACCURACY OR COMPLETENESS OF SCANNED COPIES OF THIS PLAN SHEET.

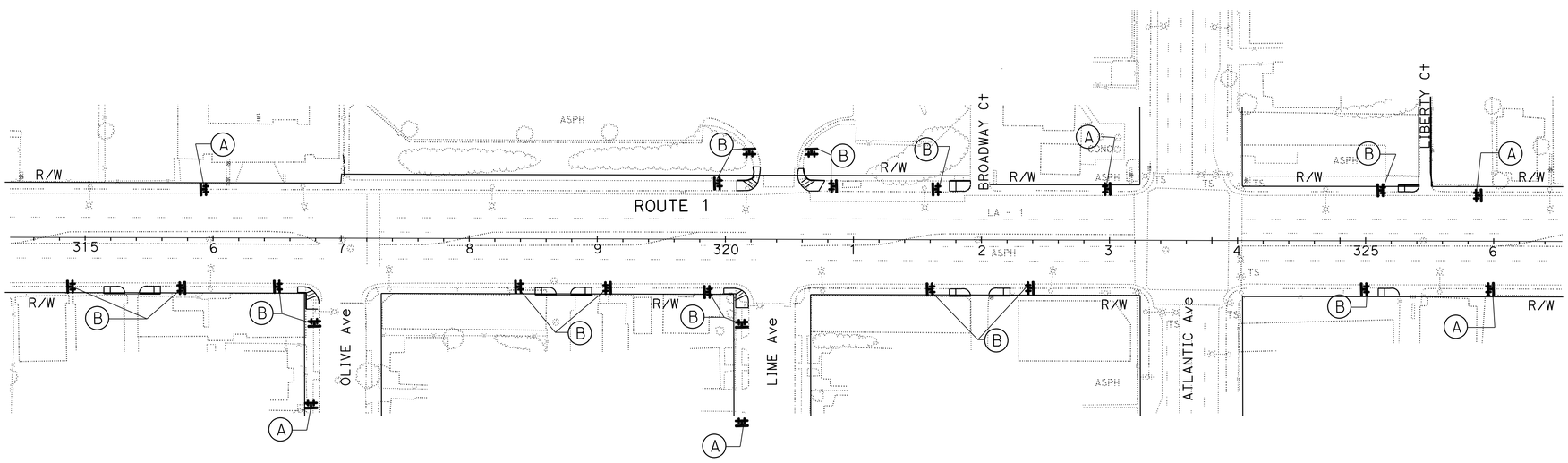

TRAFFIC HANDLING PLAN (PEDESTRIAN)

NO SCALE

APPROVED FOR TRAFFIC HANDLING (PEDESTRIAN) WORK ONLY

TH-16

STATE OF CALIFORNIA - DEPARTMENT OF TRANSPORTATION
Caltrans® **TRAFFIC DESIGN**

FUNCTIONAL SUPERVISOR: MOHAMMED CHOWDHURY
CALCULATED-DESIGNED BY: MARISA MANDOCDOC
CHECKED BY: MOHAMMED HAIDER
REVISED BY
DATE REVISED

LAST REVISION 00-00-00
DATE PLOTTED => 07-SEP-2016
TIME PLOTTED => 12:27

Dist	COUNTY	ROUTE	POST MILES TOTAL PROJECT	SHEET No.	TOTAL SHEETS
07	LA	1	2.4/7.2	118	200

REGISTERED CIVIL ENGINEER 6/28/16 DATE

6-30-16
PLANS APPROVAL DATE

REGISTERED PROFESSIONAL ENGINEER
MOHAMMED HAIDER
No. 61335
Exp. 6/30/17
CIVIL
STATE OF CALIFORNIA

THE STATE OF CALIFORNIA OR ITS OFFICERS OR AGENTS SHALL NOT BE RESPONSIBLE FOR THE ACCURACY OR COMPLETENESS OF SCANNED COPIES OF THIS PLAN SHEET.

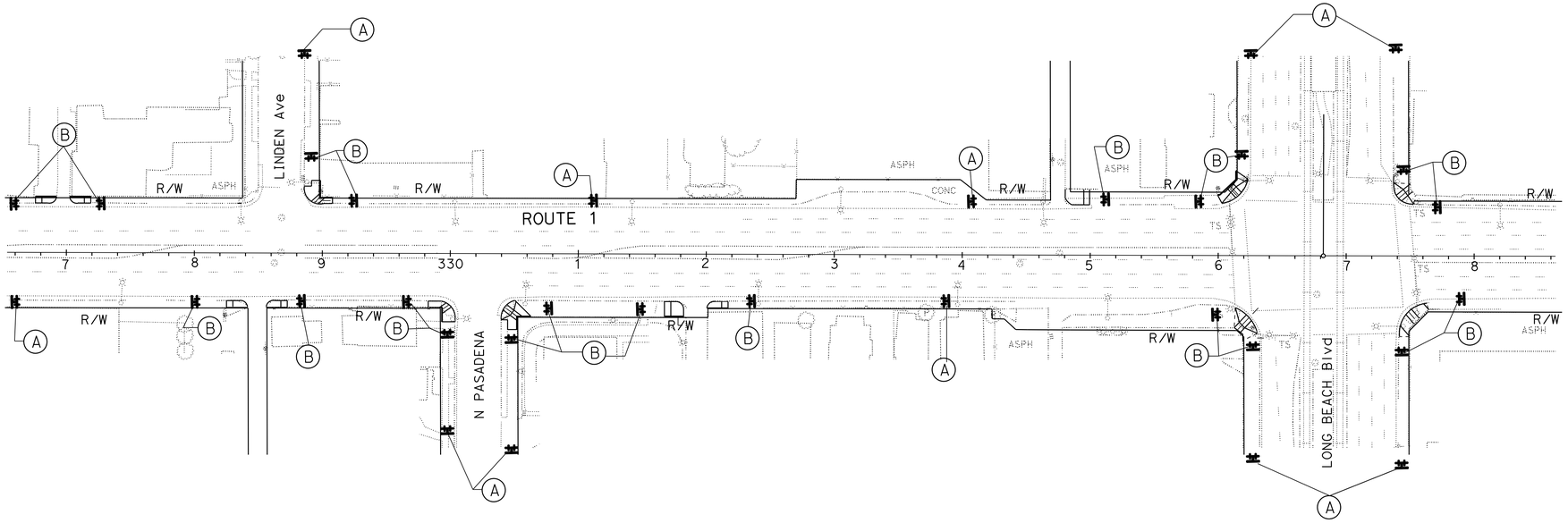

TRAFFIC HANDLING PLAN (PEDESTRIAN)

NO SCALE

APPROVED FOR TRAFFIC HANDLING (PEDESTRIAN) WORK ONLY

TH-17

STATE OF CALIFORNIA - DEPARTMENT OF TRANSPORTATION
Caltrans® **TRAFFIC DESIGN**

FUNCTIONAL SUPERVISOR: MOHAMMED CHOWDHURY
CALCULATED-DESIGNED BY: MARISA MANDOCDOC
CHECKED BY: MOHAMMED HAIDER
REVISED BY
DATE REVISED

LAST REVISION 00-00-00
DATE PLOTTED => 07-SEP-2016
TIME PLOTTED => 12:27

Dist	COUNTY	ROUTE	POST MILES TOTAL PROJECT	SHEET No.	TOTAL SHEETS
07	LA	1	2.4/7.2	119	200

REGISTERED CIVIL ENGINEER 6/28/16 DATE

6-30-16
PLANS APPROVAL DATE

REGISTERED PROFESSIONAL ENGINEER
MOHAMMED HAIDER
No. 61335
Exp. 6/30/17
CIVIL
STATE OF CALIFORNIA

THE STATE OF CALIFORNIA OR ITS OFFICERS OR AGENTS SHALL NOT BE RESPONSIBLE FOR THE ACCURACY OR COMPLETENESS OF SCANNED COPIES OF THIS PLAN SHEET.

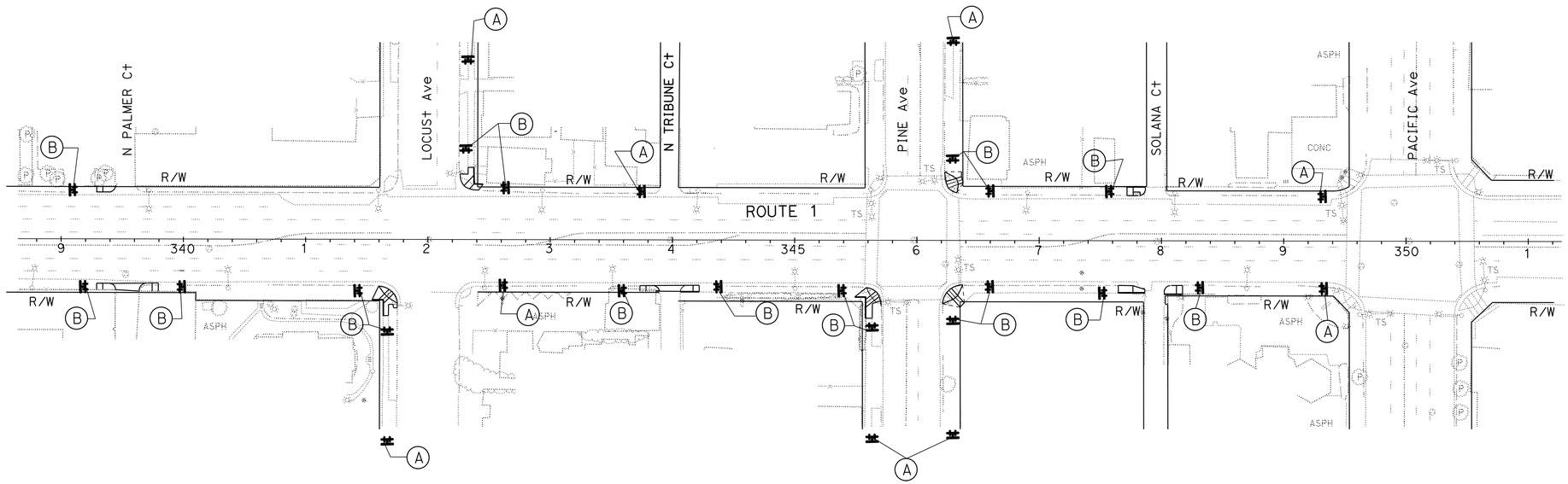

TRAFFIC HANDLING PLAN (PEDESTRIAN)

NO SCALE

APPROVED FOR TRAFFIC HANDLING (PEDESTRIAN) WORK ONLY

TH-18

STATE OF CALIFORNIA - DEPARTMENT OF TRANSPORTATION	Caltrans® TRAFFIC DESIGN
FUNCTIONAL SUPERVISOR	MOHAMMED CHOWDHURY
CALCULATED-DESIGNED BY	MARISA MANDOCDOC
CHECKED BY	MOHAMMED HAIDER
REVISED BY	
DATE REVISED	

LAST REVISION 00-00-00 | DATE PLOTTED => 07-SEP-2016 | TIME PLOTTED => 12:27

BORDER LAST REVISED 7/2/2010 | USERNAME => s115484 | DGN FILE => 729080md018.dgn | RELATIVE BORDER SCALE IS IN INCHES 0 1 2 3 | UNIT 2124 | PROJECT NUMBER & PHASE 07120000751

Dist	COUNTY	ROUTE	POST MILES TOTAL PROJECT	SHEET No.	TOTAL SHEETS
07	LA	1	2.4/7.2	120	200

REGISTERED CIVIL ENGINEER 6/28/16 DATE

6-30-16
PLANS APPROVAL DATE

REGISTERED PROFESSIONAL ENGINEER
MOHAMMED HAIDER
No. 61335
Exp. 6/30/17
CIVIL
STATE OF CALIFORNIA

THE STATE OF CALIFORNIA OR ITS OFFICERS OR AGENTS SHALL NOT BE RESPONSIBLE FOR THE ACCURACY OR COMPLETENESS OF SCANNED COPIES OF THIS PLAN SHEET.

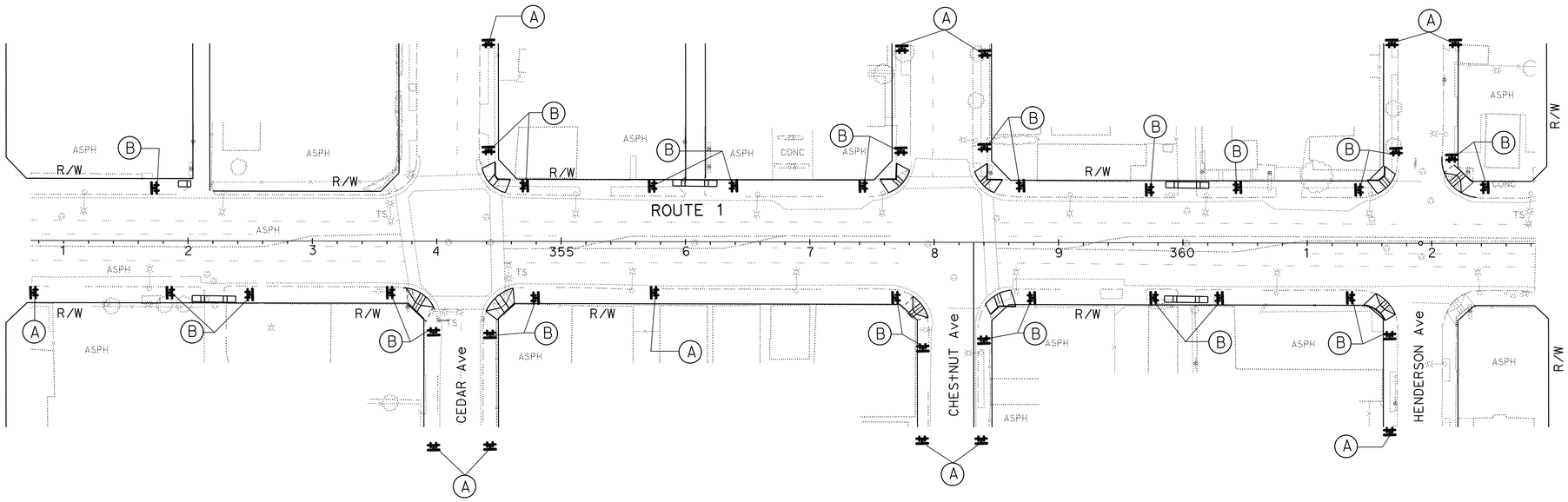

TRAFFIC HANDLING PLAN (PEDESTRIAN)

NO SCALE

APPROVED FOR TRAFFIC HANDLING (PEDESTRIAN) WORK ONLY

TH-19

STATE OF CALIFORNIA - DEPARTMENT OF TRANSPORTATION
Caltrans® **TRAFFIC DESIGN**

FUNCTIONAL SUPERVISOR: MOHAMMED CHOWDHURY

CALCULATED-DESIGNED BY: MARISA MANDOCDOC
CHECKED BY: MOHAMMED HAIDER

REVISED BY
DATE REVISED

LAST REVISION 00-00-00
DATE PLOTTED => 07-SEP-2016
TIME PLOTTED => 12:27

Dist	COUNTY	ROUTE	POST MILES TOTAL PROJECT	SHEET No.	TOTAL SHEETS
07	LA	1	2.4/7.2	121	200

REGISTERED CIVIL ENGINEER 6/28/16 DATE

6-30-16
PLANS APPROVAL DATE

REGISTERED PROFESSIONAL ENGINEER
MOHAMMED HAIDER
No. 61335
Exp. 6/30/17
CIVIL
STATE OF CALIFORNIA

THE STATE OF CALIFORNIA OR ITS OFFICERS OR AGENTS SHALL NOT BE RESPONSIBLE FOR THE ACCURACY OR COMPLETENESS OF SCANNED COPIES OF THIS PLAN SHEET.

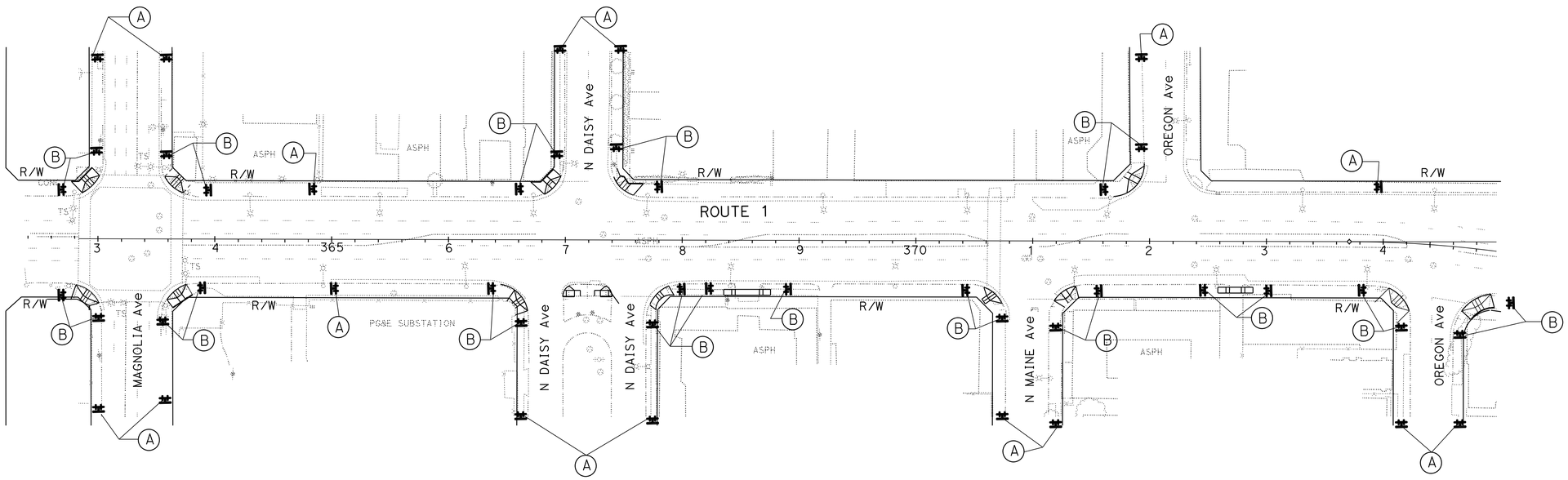

TRAFFIC HANDLING PLAN (PEDESTRIAN)

NO SCALE

APPROVED FOR TRAFFIC HANDLING (PEDESTRIAN) WORK ONLY

TH-20

STATE OF CALIFORNIA - DEPARTMENT OF TRANSPORTATION
Caltrans® **TRAFFIC DESIGN**

FUNCTIONAL SUPERVISOR: MOHAMMED CHOWDHURY
CALCULATED-DESIGNED BY: MARISA MANDOCDOC
CHECKED BY: MOHAMMED HAIDER
REVISED BY
DATE REVISED

LAST REVISION 00-00-00
DATE PLOTTED => 07-SEP-2016
TIME PLOTTED => 12:27

Dist	COUNTY	ROUTE	POST MILES TOTAL PROJECT	SHEET No.	TOTAL SHEETS
07	LA	1	2.4/7.2	122	200

REGISTERED CIVIL ENGINEER 6/28/16 DATE

6-30-16
PLANS APPROVAL DATE

REGISTERED PROFESSIONAL ENGINEER
MOHAMMED HAIDER
No. 61335
Exp. 6/30/17
CIVIL
STATE OF CALIFORNIA

THE STATE OF CALIFORNIA OR ITS OFFICERS OR AGENTS SHALL NOT BE RESPONSIBLE FOR THE ACCURACY OR COMPLETENESS OF SCANNED COPIES OF THIS PLAN SHEET.

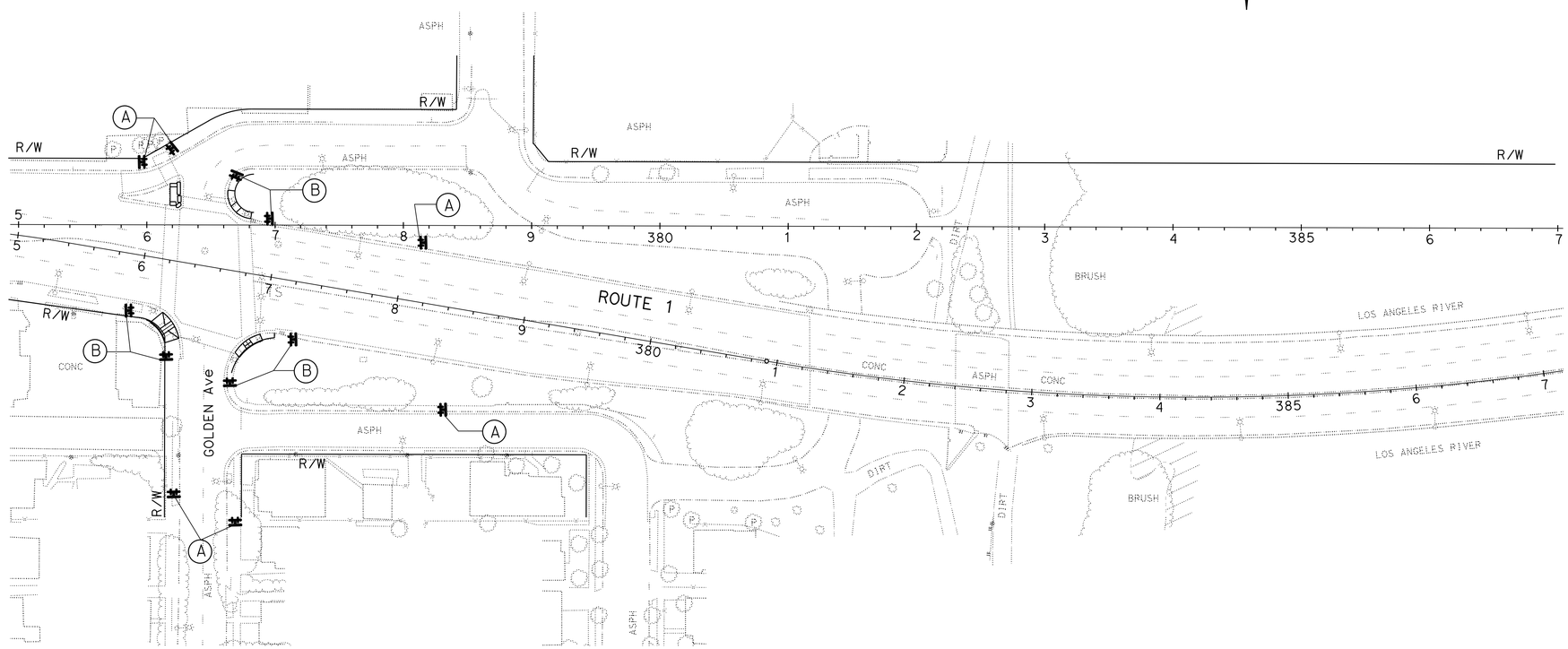

TRAFFIC HANDLING PLAN (PEDESTRIAN)

NO SCALE

APPROVED FOR TRAFFIC HANDLING (PEDESTRIAN) WORK ONLY

TH-21

STATE OF CALIFORNIA - DEPARTMENT OF TRANSPORTATION
Caltrans® **TRAFFIC DESIGN**

FUNCTIONAL SUPERVISOR: MOHAMMED CHOWDHURY
CALCULATED-DESIGNED BY: MARISA MANDOCDOC
CHECKED BY: MOHAMMED HAIDER
REVISED BY
DATE REVISED

LAST REVISION 00-00-00
DATE PLOTTED => 07-SEP-2016
TIME PLOTTED => 12:27

BORDER LAST REVISED 7/2/2010
USERNAME => s115484
DGN FILE => 729080md021.dgn
RELATIVE BORDER SCALE IS IN INCHES 0 1 2 3
UNIT 2124
PROJECT NUMBER & PHASE 07120000751

Dist	COUNTY	ROUTE	POST MILES TOTAL PROJECT	SHEET No.	TOTAL SHEETS
07	LA	1	2.4/7.2	123	200

REGISTERED CIVIL ENGINEER 6/28/16 DATE

6-30-16
PLANS APPROVAL DATE

REGISTERED PROFESSIONAL ENGINEER MOHAMMED HAIDER No. 61335 Exp. 6/30/17 CIVIL STATE OF CALIFORNIA

THE STATE OF CALIFORNIA OR ITS OFFICERS OR AGENTS SHALL NOT BE RESPONSIBLE FOR THE ACCURACY OR COMPLETENESS OF SCANNED COPIES OF THIS PLAN SHEET.

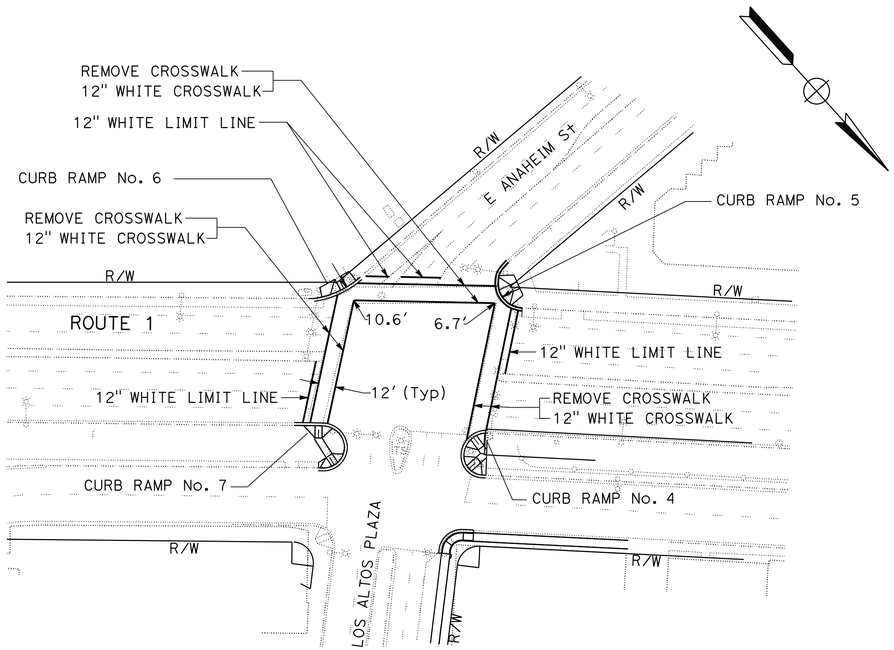

LOCATION 1

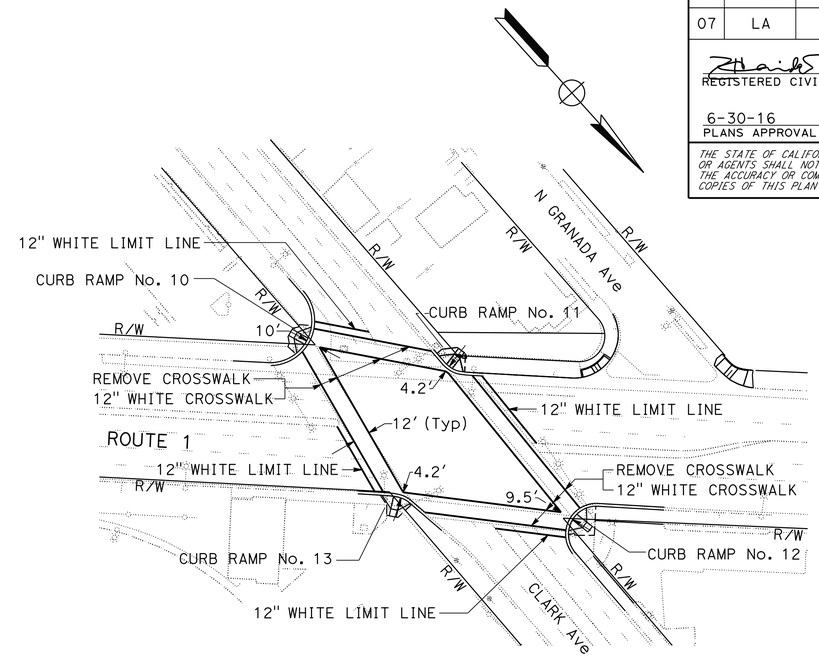

LOCATION 2

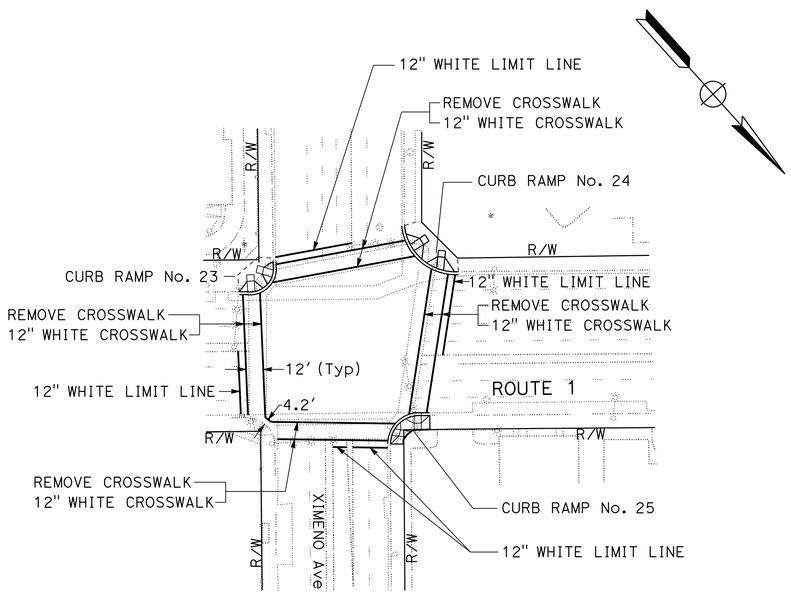

LOCATION 3

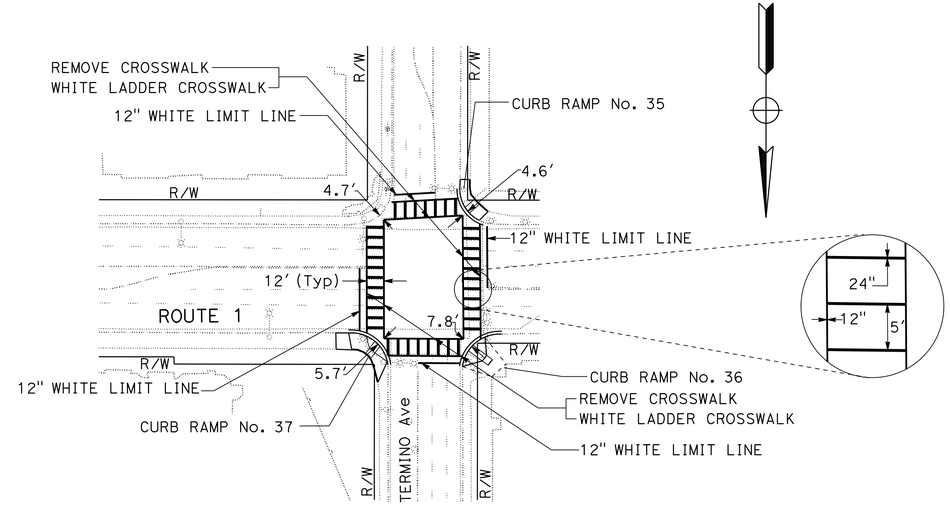

LOCATION 4

PAVEMENT DELINEATION PLAN

NO SCALE

APPROVED FOR PAVEMENT DELINEATION WORK ONLY

PD-1

REVISED BY	DATE REVISED
JAMES CANALITA	MOHAMMED HAIDER
CALCULATED-DESIGNED BY	CHECKED BY
FUNCTIONAL SUPERVISOR	MOHAMMED CHOWDHURY

STATE OF CALIFORNIA - DEPARTMENT OF TRANSPORTATION
Caltrans® **TRAFFIC DESIGN**

LAST REVISION 00-00-00 | DATE PLOTTED => 07-SEP-2016 | TIME PLOTTED => 12:27

Dist	COUNTY	ROUTE	POST MILES TOTAL PROJECT	SHEET No.	TOTAL SHEETS
07	LA	1	2.4/7.2	124	200

REGISTERED CIVIL ENGINEER 6/28/16 DATE

6-30-16
PLANS APPROVAL DATE

REGISTERED PROFESSIONAL ENGINEER MOHAMMED HAIDER No. 61335 Exp. 6/30/17 CIVIL STATE OF CALIFORNIA

THE STATE OF CALIFORNIA OR ITS OFFICERS OR AGENTS SHALL NOT BE RESPONSIBLE FOR THE ACCURACY OR COMPLETENESS OF SCANNED COPIES OF THIS PLAN SHEET.

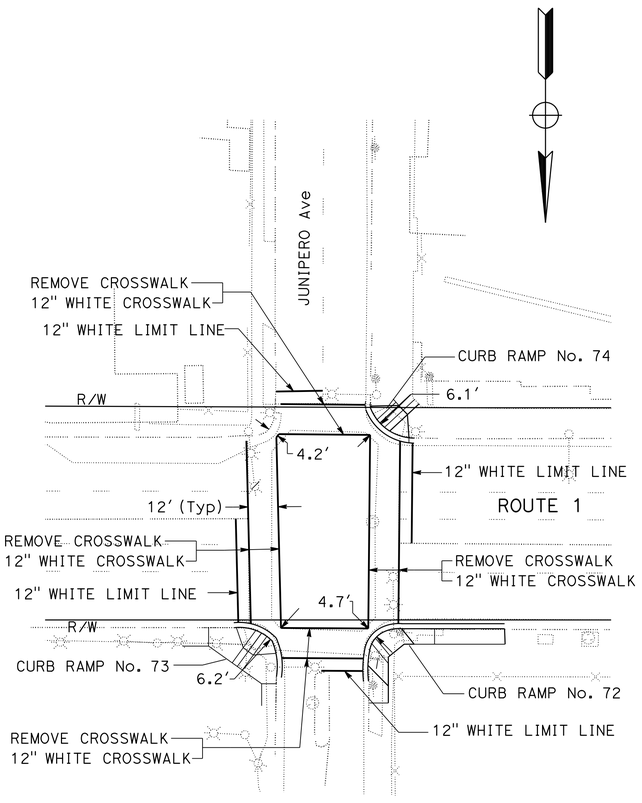

LOCATION 5

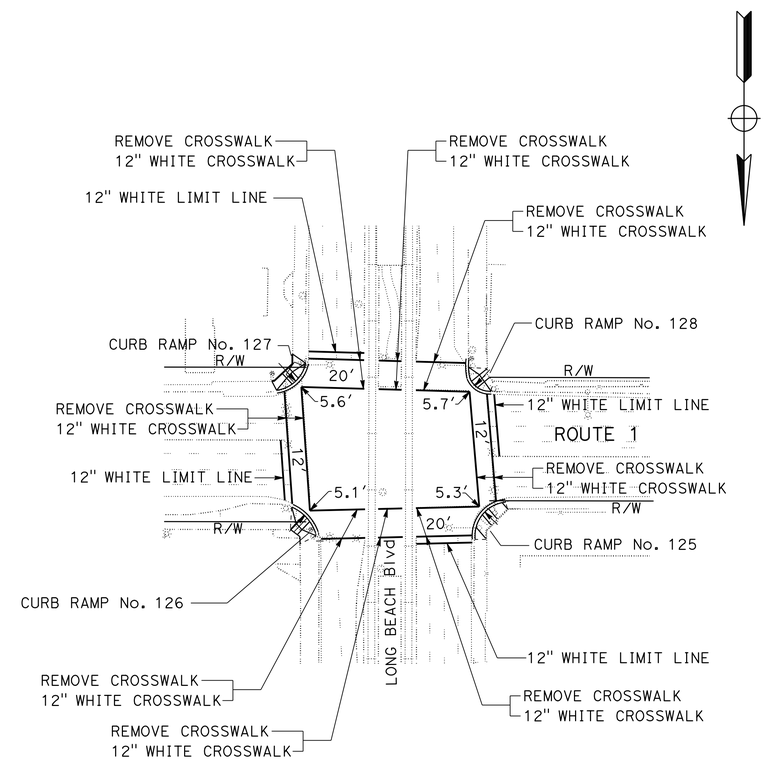

LOCATION 6

PAVEMENT DELINEATION PLAN

NO SCALE

APPROVED FOR PAVEMENT DELINEATION WORK ONLY

PD-2

REVISED BY	
DATE REVISED	
JAMES CANALITA	
MOHAMMED HAIDER	
CALCULATED-DESIGNED BY	
CHECKED BY	
FUNCTIONAL SUPERVISOR	
MOHAMMED CHOWDHURY	

STATE OF CALIFORNIA - DEPARTMENT OF TRANSPORTATION
Caltrans® TRAFFIC DESIGN

LAST REVISION 00-00-00
DATE PLOTTED => 07-SEP-2016
TIME PLOTTED => 12:27

Dist	COUNTY	ROUTE	POST MILES TOTAL PROJECT	SHEET No.	TOTAL SHEETS
07	LA	1	2.4/7.2	125	200

REGISTERED CIVIL ENGINEER 6/28/16 DATE

6-30-16
PLANS APPROVAL DATE

REGISTERED PROFESSIONAL ENGINEER MOHAMMED HAIDER No. 61335 Exp. 6/30/17 CIVIL STATE OF CALIFORNIA

THE STATE OF CALIFORNIA OR ITS OFFICERS OR AGENTS SHALL NOT BE RESPONSIBLE FOR THE ACCURACY OR COMPLETENESS OF SCANNED COPIES OF THIS PLAN SHEET.

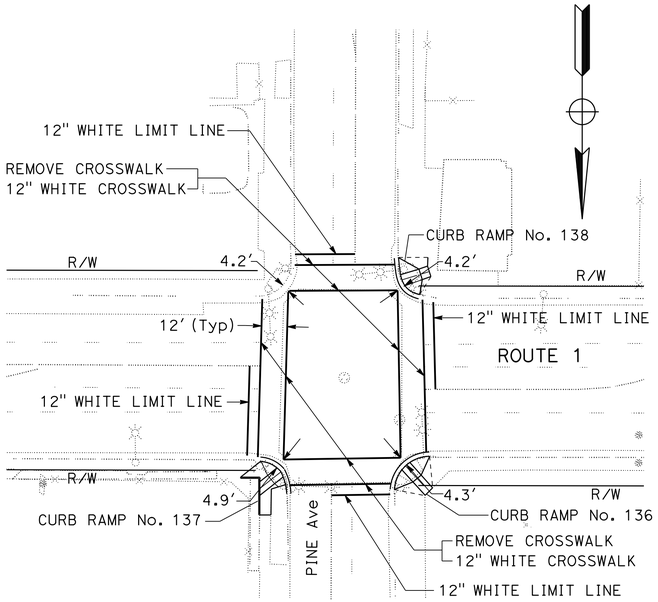

LOCATION 7

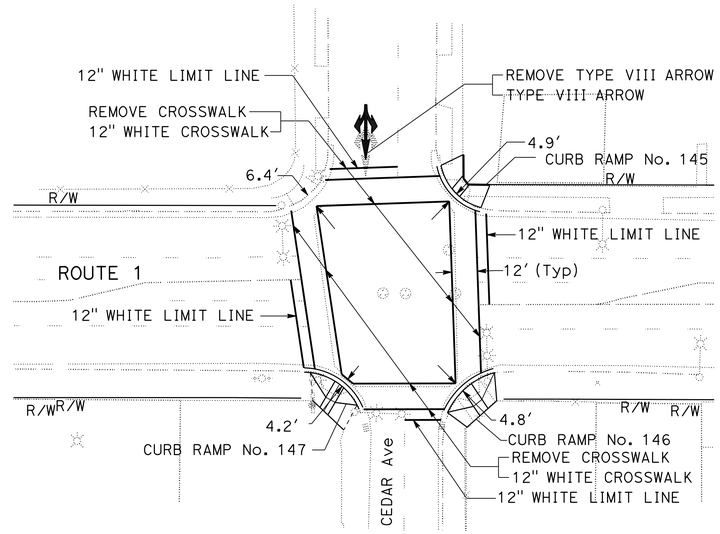

LOCATION 8

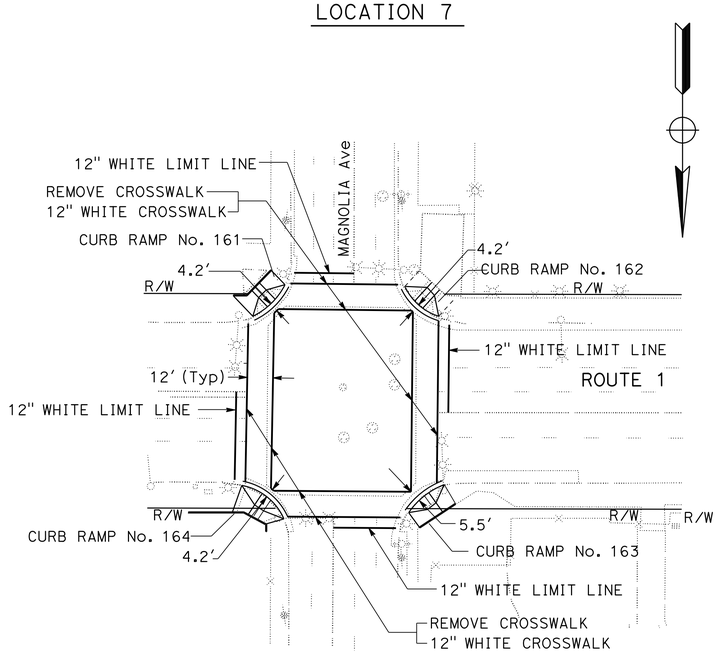

LOCATION 9

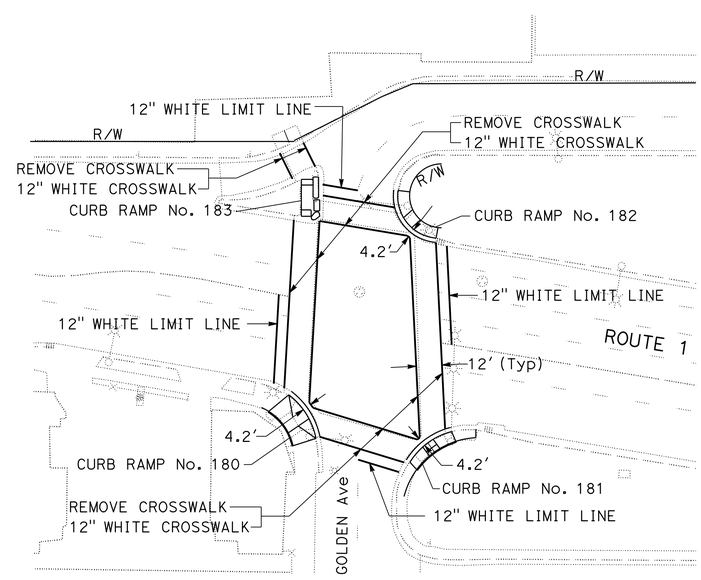

LOCATION 10

PAVEMENT DELINEATION PLAN

NO SCALE

APPROVED FOR PAVEMENT DELINEATION WORK ONLY

PD-3

REVISED BY	DATE REVISED
JAMES CANALITA	MOHAMMED HAIDER
CALCULATED-DESIGNED BY	CHECKED BY
FUNCTIONAL SUPERVISOR	MOHAMMED CHOWDHURY

STATE OF CALIFORNIA - DEPARTMENT OF TRANSPORTATION
Caltrans® TRAFFIC DESIGN

LAST REVISION 00-00-00 | DATE PLOTTED => 07-SEP-2016 | TIME PLOTTED => 12:27

Dist	COUNTY	ROUTE	POST MILES TOTAL PROJECT	SHEET No.	TOTAL SHEETS
07	LA	1	2.4/7.2	126	200

REGISTERED CIVIL ENGINEER 6/28/16 DATE

6-30-16
PLANS APPROVAL DATE

REGISTERED PROFESSIONAL ENGINEER
MOHAMMED HAIDER
No. 61335
Exp. 6/30/17
CIVIL
STATE OF CALIFORNIA

THE STATE OF CALIFORNIA OR ITS OFFICERS OR AGENTS SHALL NOT BE RESPONSIBLE FOR THE ACCURACY OR COMPLETENESS OF SCANNED COPIES OF THIS PLAN SHEET.

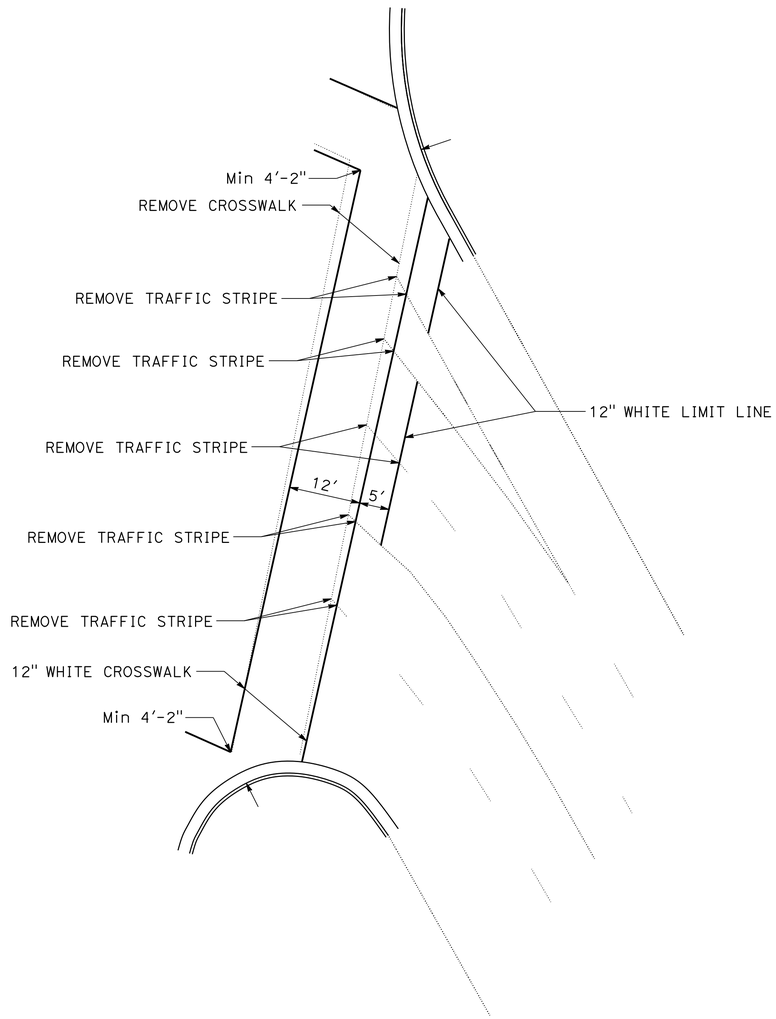

TYPICAL CROSSWALK PAVEMENT DELINEATION
WITH ONE OR MORE 12" WHITE LIMIT LINE

PAVEMENT DELINEATION DETAILS

NO SCALE

PDD-1

REVISED BY	DATE REVISED

JAMES CANALITA — CALCULATED-DESIGNED BY
MOHAMMED HAIDER — CHECKED BY
FUNCTIONAL SUPERVISOR
MOHAMMED CHOWDHURY

STATE OF CALIFORNIA - DEPARTMENT OF TRANSPORTATION
Caltrans® TRAFFIC DESIGN

S:\design\290801\traffic\submittals\729080nb001.dgn

LAST REVISION 00-00-00 | DATE PLOTTED => 07-SEP-2016 | TIME PLOTTED => 12:27

Dist	COUNTY	ROUTE	POST MILES TOTAL PROJECT	SHEET No.	TOTAL SHEETS
07	LA	1	2.4/7.2	127	200

REGISTERED CIVIL ENGINEER 6/28/16 DATE

6-30-16
PLANS APPROVAL DATE

REGISTERED PROFESSIONAL ENGINEER MOHAMMED HAIDER No. 61335 Exp. 6/30/17 CIVIL STATE OF CALIFORNIA

THE STATE OF CALIFORNIA OR ITS OFFICERS OR AGENTS SHALL NOT BE RESPONSIBLE FOR THE ACCURACY OR COMPLETENESS OF SCANNED COPIES OF THIS PLAN SHEET.

PAVEMENT DELINEATION QUANTITIES

SHEET No.	LOCATION No.	REMOVE YELLOW THERMOPLASTIC TRAFFIC STRIPE (HAZARDOUS WASTE)	REMOVE THERMOPLASTIC TRAFFIC STRIPE			REMOVE THERMOPLASTIC PAVEMENT MARKING	REMOVE PAVEMENT MARKER	THERMOPLASTIC PAVEMENT MARKING			PAVEMENT MARKER (RETROREFLECTIVE)
		Det 21	Det 8	Det 50	Det 38A						
		4" DOUBLE SOLID YELLOW	4" (BROKEN 17-7) (WHITE)	4" SOLID WHITE	8" SOLID WHITE			CROSSWALK (WHITE)	ARROW	LIMIT LINE	TYPE G
		LF	LF	LF	LF	SQFT	EA	SQFT	SQFT	SQFT	EA
PD-1	1	10	10	10	50	545	10	563		134	10
	2	6	15	26	30	848	10	764		202	10
	3	76	26	57	197	744	25	734		190	25
	4	16		28	58	1,271	14	1,274		141	14
PD-2	5			20	30	449	8	439		117	8
	6			30	60	727	12	733		164	12
PD-3	7			20	40	428	8	516		138	8
	8			20	20	562	6	523	36	133	6
	9			25	50	556	10	548		139	10
	10			20	20	563	6	543		124	6
TOTAL		108	51	256	555	6,693	109	6,637	36	1,482	109
GRAND TOTAL		108	862			6,693	109	8,155			109

PAVEMENT DELINEATION QUANTITIES

PDQ-1

STATE OF CALIFORNIA - DEPARTMENT OF TRANSPORTATION
Caltrans® TRAFFIC DESIGN

FUNCTIONAL SUPERVISOR: MOHAMMED CHOWDHURY
CALCULATED-DESIGNED BY: JAMES CANALITA
CHECKED BY: MOHAMMED HAIDER
REVISED BY
DATE REVISED

LAST REVISION 00-00-00
DATE PLOTTED => 07-SEP-2016
TIME PLOTTED => 12:27

Dist	COUNTY	ROUTE	POST MILES TOTAL PROJECT	SHEET No.	TOTAL SHEETS
07	LA	1	2.4/7.2	128	200

REGISTERED CIVIL ENGINEER 6/28/16 DATE

6-30-16
PLANS APPROVAL DATE

REGISTERED PROFESSIONAL ENGINEER MOHAMMED HAIDER No. 61335 Exp. 6/30/17 CIVIL STATE OF CALIFORNIA

THE STATE OF CALIFORNIA OR ITS OFFICERS OR AGENTS SHALL NOT BE RESPONSIBLE FOR THE ACCURACY OR COMPLETENESS OF SCANNED COPIES OF THIS PLAN SHEET.

ROADWAY QUANTITIES

LOCATION No.	SHEET No.	MINOR CONCRETE (Misc CONSTRUCTION) (RSC) CURB & GUTTER	DRIVEWAY	CURB RAMP	LCB RAPID SETTING	ROADWAY EXCAVATION	REMOVE CONCRETE	DETECTABLE WARNING SURFACE	TEMPORARY DRAINAGE INLET PROTECTION	ADJUST VALVE BOX FRAME & COVER TO GRADE	ADJUST PULL BOX	ADJUST MANHOLE TO GRADE	PRE/POST CONSTRUCTION SURVEY	RELOCATE ROADSIDE SIGN
		CY	CY	CY	CY	CY	CY	SQFT	EA	EA	EA	EA	EA	EA
1	C-1	2.75		2.39	1.93	1.12	5.02	15.00					1	
2	C-1	2.43		2.14	1.70	0.99	4.66	15.00					1	
3	C-2	2.33		4.62	1.63	0.95	7.21	15.00					1	
4	C-2	2.08		4.13	1.46	0.85	6.44	15.00					1	
5	C-2	2.00		3.13	1.40	0.82	5.35	15.00					1	
6	C-2	2.26		2.68	1.58	0.92	5.20	15.00					1	
7	C-2	1.58		3.60	1.11	0.65	5.36	15.00					1	
8	C-2	1.92		6.11	1.34	0.78	8.24	15.00					1	
9	C-1							15.00						
10	C-3	1.92		3.47	0.78	0.78	5.60	15.00					1	
11	C-3	1.81		3.78	0.74	0.74	5.60	15.00					1	
12	C-3	2.58		5.10	1.05	1.05	7.96	15.00					1	
13	C-3	1.92		3.80	0.78	0.78	5.92	15.00					1	
14	C-4	2.06		1.53	0.84	0.84	3.64	15.00					1	
15	C-4	2.68		4.25	1.09	1.09	6.99	15.00					1	
16	C-5	2.42		4.62	0.99	0.99	7.14	15.00					1	1
17	C-5	2.88		4.30	1.17	1.17	7.31	15.00					1	
18	C-5	3.18		2.53	1.30	1.30	6.06	15.00					1	
19	C-6	2.96		5.64	1.21	1.21	8.93	15.00					1	
20	C-6	1.88		4.26	0.77	0.77	6.35	15.00					1	
21	C-6	3.33		1.80	1.36	1.36	5.29	15.00					1	
22	C-6	3.33		1.80	1.36	1.36	5.29	15.00					1	
23	C-7	1.58		2.21	0.65	0.65	3.97	15.00					1	
23	C-7	1.79		2.50	0.73	0.73	4.49	15.00						
24	C-7	2.42		5.32	0.99	0.99	8.00	15.00					1	
24	C-7	2.13		5.61	0.87	0.87	7.97	15.00						
25	C-8	2.00		3.48	0.82	0.82	5.60	15.00					1	
SHEET TOTAL		60.22		94.79	29.65	24.59	159.58	405.00					24	1

SUMMARY OF QUANTITIES

Q-1

REVISED BY	DATE REVISED
MARISA MANDOCDOC	MOHAMMED HAIDER
CALCULATED-DESIGNED BY	CHECKED BY
FUNCTIONAL SUPERVISOR	MOHAMMED CHOWDHURY

STATE OF CALIFORNIA - DEPARTMENT OF TRANSPORTATION
Caltrans® TRAFFIC DESIGN

S:\design\290801\traffic\submittals\729080pa001.dgn

LAST REVISION 00-00-00 DATE PLOTTED => 07-SEP-2016 TIME PLOTTED => 12:27

Dist	COUNTY	ROUTE	POST MILES TOTAL PROJECT	SHEET No.	TOTAL SHEETS
07	LA	1	2.4/7.2	129	200

REGISTERED CIVIL ENGINEER 6/28/16 DATE

6-30-16
PLANS APPROVAL DATE

REGISTERED PROFESSIONAL ENGINEER MOHAMMED HAIDER No. 61335 Exp. 6/30/17 CIVIL STATE OF CALIFORNIA

THE STATE OF CALIFORNIA OR ITS OFFICERS OR AGENTS SHALL NOT BE RESPONSIBLE FOR THE ACCURACY OR COMPLETENESS OF SCANNED COPIES OF THIS PLAN SHEET.

ROADWAY QUANTITIES

LOCATION No.	SHEET No.	MINOR CONCRETE (Misc CONSTRUCTION) (RSC) CURB & GUTTER	DRIVEWAY	CURB RAMP	LCB RAPID SETTING	ROADWAY EXCAVATION	REMOVE CONCRETE	DETECTABLE WARNING SURFACE	TEMPORARY DRAINAGE INLET PROTECTION	ADJUST VALVE BOX FRAME & COVER TO GRADE	ADJUST PULL BOX	ADJUST MANHOLE TO GRADE	PRE/POST CONSTRUCTION SURVEY	RELOCATE ROADSIDE SIGN
		CY	CY	CY	CY	CY	CY	SQFT	EA	EA	EA	EA	EA	EA
25	C-8	2.00		2.75	0.82	0.82	4.86	15.00	1					
27	C-8	3.08		10.85	1.26	1.26	14.40	15.00	1				1	
26	C-8	2.54		3.79	1.04	1.04	6.46	15.00					1	
28	C-9	3.08		5.65	1.26	1.26	9.08	15.00					1	
29	C-9							36.00						
30	C-9	2.83		4.94	1.16	1.16	7.83	15.00					1	
31	C-10	2.42		4.96	0.99	0.99	7.74	15.00					1	
32	C-10	2.75		3.28	1.12	1.12	6.08	15.00					1	
33	C-10	3.25		6.20	1.33	1.33	9.93	15.00					1	
34	C-10	5.08		5.49	2.08	2.08	11.06	15.00					1	
35	C-11	2.04		2.40	0.83	0.83	4.48	15.00					1	
36	C-11	2.33		6.67	0.95	0.95	9.35	15.00					1	
37	C-11	2.04		3.27	0.83	0.83	5.34	15.00					1	
38	C-12	0.00						15.00						
39	C-12	0.00						15.00						
43	C-13	2.50		3.98	1.02	1.02	6.54	15.00					1	
42	C-13	3.33		5.63	1.36	1.36	8.72	15.00	1				1	
40	C-12	5.08		6.52	2.08	2.08	12.36	15.00	1				1	
41	C-12	1.83		1.42	0.75	0.75	3.45	15.00					1	
44	C-13	2.08		1.90	0.85	0.85	4.07	15.00					1	
45	C-14	0.00						15.00						
46	C-14	1.79	1.81	1.52	1.23	1.23	3.37	24.00					1	
47	C-14	0.83		0.61	0.81	0.76	1.57	20.00					1	
48	C-14	2.25		2.64	0.92	0.92	5.23	15.00	1				1	
50	C-14	1.83	1.81	1.54	1.25	1.25	3.45	24.00					1	
49	C-14	1.83		1.54	1.22	1.17	3.45	20.00					1	
51	C-15	1.83	1.18	2.22	1.38	1.35	4.12	20.00					1	
SHEET TOTAL		58.67	4.80	89.79	26.54	26.41	152.94	459.00	5				22	

SUMMARY OF QUANTITIES

Q-2

REVISED BY	DATE REVISED
MARISA MANDOCDOC	MOHAMMED HAIDER
CALCULATED-DESIGNED BY	CHECKED BY
FUNCTIONAL SUPERVISOR	MOHAMMED CHOWDHURY

STATE OF CALIFORNIA - DEPARTMENT OF TRANSPORTATION
Caltrans® TRAFFIC DESIGN

S:\design\290801\traffic\submittals\729080pa002.dgn

LAST REVISION 00-00-00 | DATE PLOTTED => 07-SEP-2016 | TIME PLOTTED => 12:27

Dist	COUNTY	ROUTE	POST MILES TOTAL PROJECT	SHEET No.	TOTAL SHEETS
07	LA	1	2.4/7.2	130	200

REGISTERED CIVIL ENGINEER 6/28/16 DATE

6-30-16
PLANS APPROVAL DATE

REGISTERED PROFESSIONAL ENGINEER MOHAMMED HAIDER No. 61335 Exp. 6/30/17 CIVIL STATE OF CALIFORNIA

THE STATE OF CALIFORNIA OR ITS OFFICERS OR AGENTS SHALL NOT BE RESPONSIBLE FOR THE ACCURACY OR COMPLETENESS OF SCANNED COPIES OF THIS PLAN SHEET.

ROADWAY QUANTITIES

LOCATION No.	SHEET No.	MINOR CONCRETE (Misc CONSTRUCTION) (RSC) CURB & GUTTER	DRIVEWAY	CURB RAMP	LCB RAPID SETTING	ROADWAY EXCAVATION	REMOVE CONCRETE	DETECTABLE WARNING SURFACE	TEMPORARY DRAINAGE INLET PROTECTION	ADJUST VALVE BOX FRAME & COVER TO GRADE	ADJUST PULL BOX	ADJUST MANHOLE TO GRADE	PRE/POST CONSTRUCTION SURVEY	RELOCATE ROADSIDE SIGN
		CY	CY	CY	CY	CY	CY	SQFT	EA	EA	EA	EA	EA	EA
52	C-15	1.83	1.17	1.54	1.35	1.32	3.45	24.00	1				1	
53	C-15	2.17		2.54	0.88	0.88	5.03	15.00					1	
54	C-15	1.83	1.81	1.54	1.25	1.23	3.45	24.00					1	
55	C-15	1.83		1.54	1.17	1.16	3.45	24.00					1	
56	C-16	1.83	1.81	1.54	1.25	1.23	3.45	24.00					1	
57	C-16	1.83		1.54	1.17	1.16	3.45	24.00					1	
58	C-16	1.75		4.11	0.71	0.71	5.86	15.00		1			1	
59	C-17	1.83		2.07	0.75	0.75	3.99	15.00	1				1	
60	C-17	1.92		2.73	0.78	0.78	4.73	15.00					1	
61	C-17	1.75		3.12	0.71	0.71	5.13	15.00					1	
62	C-18	1.50		2.64	0.61	0.61	4.36	15.00			1		1	
63	C-18	2.17		2.18	0.88	0.88	4.40	15.00	1				1	
64	C-18	2.33		2.13	0.95	0.95	4.56	15.00					1	
66	C-17	1.83	1.56	1.54	1.17	1.15	3.45	15.00					1	
65	C-17	1.83		1.54	1.17	1.15	3.45	15.00					1	
67	C-19	2.13		1.98	0.87	0.87	4.31	15.00			1		1	
68	C-19	2.67		2.38	1.09	1.09	5.21	15.00			1		1	
69	C-19	4.33		4.43	1.77	1.77	8.79	15.00			2		1	
71	C-20	1.83	1.69	1.54	1.20	1.18	3.45	15.00					1	
70	C-20	1.83		1.54	1.20	1.18	3.45	15.00			2		1	
72	C-21	1.92		2.53	0.78	0.78	4.45	15.00		1			1	
73	C-21	2.58		6.06	1.05	1.05	9.03	15.00	1		1		1	
74	C-21	1.67		3.91	0.68	0.68	5.83	15.00		1			1	
75	C-20	2.08		1.71	0.85	0.85	3.92	15.00					1	
76	C-22	2.00		1.47	0.82	0.82	3.76	15.00					1	
77	C-22	1.83		1.34	0.75	0.75	3.45	15.00					1	
78	C-22	1.75	1.00	1.28	1.21	1.21	3.29	24.00					1	
SHEET TOTAL		54.88	9.04	62.52	27.07	26.90	121.18	459.00	4	3	8		27	

SUMMARY OF QUANTITIES

Q-3

REVISED BY | DATE REVISED

MARISA MANDOCDOC | MOHAMMED HAIDER

CALCULATED-DESIGNED BY | CHECKED BY

FUNCTIONAL SUPERVISOR: MOHAMMED CHOWDHURY

STATE OF CALIFORNIA - DEPARTMENT OF TRANSPORTATION
Caltrans® TRAFFIC DESIGN

S:\design\290801\traffic\submittals\729080pa003.dgn

LAST REVISION 00-00-00 | DATE PLOTTED => 07-SEP-2016 | TIME PLOTTED => 12:27

Dist	COUNTY	ROUTE	POST MILES TOTAL PROJECT	SHEET No.	TOTAL SHEETS
07	LA	1	2.4/7.2	131	200

REGISTERED CIVIL ENGINEER 6/28/16 DATE

6-30-16
PLANS APPROVAL DATE

REGISTERED PROFESSIONAL ENGINEER MOHAMMED HAIDER No. 61335 Exp. 6/30/17 CIVIL STATE OF CALIFORNIA

THE STATE OF CALIFORNIA OR ITS OFFICERS OR AGENTS SHALL NOT BE RESPONSIBLE FOR THE ACCURACY OR COMPLETENESS OF SCANNED COPIES OF THIS PLAN SHEET.

ROADWAY QUANTITIES

LOCATION No.	SHEET No.	MINOR CONCRETE (Misc CONSTRUCTION) (RSC) CURB & GUTTER	DRIVEWAY	CURB RAMP	LCB RAPID SETTING	ROADWAY EXCAVATION	REMOVE CONCRETE	DETECTABLE WARNING SURFACE	TEMPORARY DRAINAGE INLET PROTECTION	ADJUST VALVE BOX FRAME & COVER TO GRADE	ADJUST PULL BOX	ADJUST MANHOLE TO GRADE	PRE/POST CONSTRUCTION SURVEY	RELOCATE ROADSIDE SIGN
		CY	CY	CY	CY	CY	CY	SQFT	EA	EA	EA	EA	EA	EA
79	C-22		1.00	1.28	1.21	1.19	3.29	24.00					1	
80	C-23	1.98		2.43	0.81	0.81	4.45	15.00		1			1	
81	C-23	1.92		2.11	0.78	0.78	4.31	15.00	1				1	
82	C-24	1.92	1.81	1.62	1.25	1.23	3.61	16.00					1	
83	C-24	1.92		1.62	1.25	1.17	3.61	24.00	1				1	
84	C-23	2.33		2.79	0.95	0.95	5.25	15.00	1	1			1	
85	C-23	1.92		2.11	0.78	0.78	4.31	15.00					1	
87	C-24	1.92	1.81	1.62	1.25	1.23	3.61	20.00					1	
86	C-24	1.92		1.62	1.25	1.17	3.61	15.00					1	
88	C-25	2.33		3.37	0.95	0.95	5.76	15.00					1	
89	C-25	2.42		3.50	0.99	0.99	5.97	15.00					1	
90	C-25	1.83		1.53	0.75	0.75	3.45	15.00				1	1	
91	C-25	1.83		3.80	0.75	0.75	5.74	15.00				1	1	
92	C-26	1.33		1.18	0.54	0.54	2.51	15.00					1	
93	C-26	2.75		4.26	1.12	1.12	7.19	15.00		1			1	
94	C-26	0.00						15.00						
95	C-27	1.83	1.81	1.34	1.25	1.25	3.45	24.00					1	
96	C-27	1.83		1.54	1.28	1.25	3.45	24.00					1	
97	C-27	1.75		2.36	0.71	0.71	4.13	15.00					1	
98	C-27	1.92		2.68	0.78	0.78	4.59	15.00					1	
99	C-28	2.75		3.30	1.12	1.12	6.18	15.00		1			1	
100	C-28	2.67		3.24	1.09	1.09	6.00	15.00					1	
102	C-28	1.83	1.81	1.54	1.25	1.25	3.45	24.00					1	
101	C-28	1.83		1.54	1.28	1.25	3.45	24.00					1	
103	C-28	2.13		2.65	0.87	0.87	5.09	15.00					1	
104	C-28	1.83	2.53	1.54	1.43	1.39	3.45	24.00					1	
105	C-28	1.83		1.54	1.43	1.39	3.45	24.00					1	
SHEET TOTAL		52.27	10.77	58.10	24.65	24.46	113.36	483.00	3	4		2	26	

SUMMARY OF QUANTITIES

Q-4

REVISED BY | DATE REVISED
MARISA MANDOCDOC | MOHAMMED HAIDER
CALCULATED-DESIGNED BY | CHECKED BY
FUNCTIONAL SUPERVISOR
MOHAMMED CHOWDHURY

STATE OF CALIFORNIA - DEPARTMENT OF TRANSPORTATION
Caltrans® TRAFFIC DESIGN

S:\design\290801\traffic\submittals\729080pa004.dgn

LAST REVISION 00-00-00 | DATE PLOTTED => 07-SEP-2016 | TIME PLOTTED => 12:27

Dist	COUNTY	ROUTE	POST MILES TOTAL PROJECT	SHEET No.	TOTAL SHEETS
07	LA	1	2.4/7.2	132	200

REGISTERED CIVIL ENGINEER 6/28/16 DATE

6-30-16
PLANS APPROVAL DATE

REGISTERED PROFESSIONAL ENGINEER MOHAMMED HAIDER No. 61335 Exp. 6/30/17 CIVIL STATE OF CALIFORNIA

THE STATE OF CALIFORNIA OR ITS OFFICERS OR AGENTS SHALL NOT BE RESPONSIBLE FOR THE ACCURACY OR COMPLETENESS OF SCANNED COPIES OF THIS PLAN SHEET.

ROADWAY QUANTITIES

LOCATION No.	SHEET No.	MINOR CONCRETE (Misc CONSTRUCTION) (RSC) CURB & GUTTER	DRIVEWAY	CURB RAMP	LCB RAPID SETTING	ROADWAY EXCAVATION	REMOVE CONCRETE	DETECTABLE WARNING SURFACE	TEMPORARY DRAINAGE INLET PROTECTION	ADJUST VALVE BOX FRAME & COVER TO GRADE	ADJUST PULL BOX	ADJUST MANHOLE TO GRADE	PRE/POST CONSTRUCTION SURVEY	RELOCATE ROADSIDE SIGN
		CY	CY	CY	CY	CY	CY	SQFT	EA	EA	EA	EA	EA	EA
106	C-29	2.33		2.65	0.95	0.95	5.33	15.00					1	
107	C-29	2.83		2.95	1.16	1.16	5.96	15.00					1	
108	C-29	2.46		2.62	1.00	1.00	5.17	15.00					1	
109	C-30	1.25		1.47	0.51	0.51	2.90	15.00					1	
110	C-30	1.50	2.41	1.10	1.26	1.23	2.82	24.00					1	
111	C-30	1.50		1.10	1.26	1.25	2.82	24.00					1	
113	C-30	1.79		1.58	0.73	0.73	3.37	15.00					1	
114	C-31	1.58	1.63	1.16	1.09	1.10	2.98	20.00					1	
115	C-31	1.75		1.28	1.15	1.14	3.29	20.00					1	
112	C-31	0.89		0.78	0.36	0.36	1.67	15.00					1	
116	C-32	2.54		2.48	1.04	1.04	5.16	15.00	1				1	
117	C-31	1.94	1.63	1.42	1.23	1.22	3.65	20.00					1	
118	C-31	2.02		1.48	1.38	1.35	3.80	20.00					1	
119	C-32	1.96		4.32	0.80	0.80	6.34	15.00					1	
120	C-32	2.25		2.05	0.92	0.92	4.48	15.00					1	
122	C-33	1.98	1.81	1.45	1.31	1.30	3.73	20.00			1		1	
121	C-33	2.00		3.43	1.29	1.27	5.52	20.00			1		1	
123	C-33	1.40		2.25	0.57	0.57	3.86	15.00		1			1	
124	C-34	2.83		3.85	1.16	1.16	6.79	15.00					1	
125	C-34	2.00		3.74	0.82	0.82	6.04	15.00					1	
126	C-34	1.75		2.44	0.71	0.71	4.19	15.00					1	
127	C-34	1.75		2.82	0.71	0.71	4.83	15.00				1	1	
129	C-35	5.23	2.29	3.83	2.86	2.84	9.84	24.00		1			1	
130	C-35	1.90		1.39	1.34	1.32	3.57	24.00					1	
128	C-35	1.47		1.08	0.60	0.60	2.77	15.00					1	
132	C-36	2.17		2.91	0.88	0.88	5.11	15.00					1	
131	C-36	2.00		3.95	0.82	0.82	5.96	15.00	1				1	
SHEET TOTAL		55.07	9.77	61.60	27.91	27.76	121.98	471.00	2	2	2	1	27	

SUMMARY OF QUANTITIES

Q-5

REVISED BY | DATE REVISED

MARISA MANDOCDOC | MOHAMMED HAIDER

CALCULATED-DESIGNED BY | CHECKED BY

FUNCTIONAL SUPERVISOR: MOHAMMED CHOWDHURY

STATE OF CALIFORNIA - DEPARTMENT OF TRANSPORTATION

Caltrans® TRAFFIC DESIGN

S:\design\290801\traffic\submittals\729080pa005.dgn

LAST REVISION 00-00-00 | DATE PLOTTED => 07-SEP-2016 | TIME PLOTTED => 12:27

Dist	COUNTY	ROUTE	POST MILES TOTAL PROJECT	SHEET No.	TOTAL SHEETS
07	LA	1	2.4/7.2	133	200

REGISTERED CIVIL ENGINEER 6/28/16 DATE

6-30-16
PLANS APPROVAL DATE

REGISTERED PROFESSIONAL ENGINEER MOHAMMED HAIDER No. 61335 Exp. 6/30/17 CIVIL STATE OF CALIFORNIA

THE STATE OF CALIFORNIA OR ITS OFFICERS OR AGENTS SHALL NOT BE RESPONSIBLE FOR THE ACCURACY OR COMPLETENESS OF SCANNED COPIES OF THIS PLAN SHEET.

ROADWAY QUANTITIES

LOCATION No.	SHEET No.	MINOR CONCRETE (Misc CONSTRUCTION) (RSC) CURB & GUTTER	DRIVEWAY	CURB RAMP	LCB RAPID SETTING	ROADWAY EXCAVATION	REMOVE CONCRETE	DETECTABLE WARNING SURFACE	TEMPORARY DRAINAGE INLET PROTECTION	ADJUST VALVE BOX FRAME & COVER TO GRADE	ADJUST PULL BOX	ADJUST MANHOLE TO GRADE	PRE/POST CONSTRUCTION SURVEY	RELOCATE ROADSIDE SIGN
		CY	CY	CY	CY	CY	CY	SQFT	EA	EA	EA	EA	EA	EA
134	C-36	1.96	2.41	1.44	1.45	1.41	3.69	24.00					1	
133	C-36	1.96		1.44	1.45	1.41	3.69	24.00					1	
135	C-37	2.58		4.99	1.05	1.05	7.95	15.00					1	
136	C-37	1.83		3.06	0.75	0.75	4.73	15.00	1		1		1	
137	C-37	1.94		3.77	0.79	0.79	5.99	15.00	1				1	
140	C-38	1.25		1.47	0.51	0.51	2.72	15.00		1			1	
138	C-38	1.88	3.25	2.11	1.65	1.60	4.08	20.00					1	
139	C-38	1.96		3.79	1.65	1.63	5.84	15.00		1			1	
141	C-39	0.96		1.41	0.39	0.39	2.23	15.00					1	
142	C-39	1.71	4.33	3.58	1.64	1.80	5.22	15.00					1	
143	C-39	1.71		3.58	1.64	1.80	5.22	15.00					1	
144	C-40	3.08		3.92	1.26	1.26	7.16	15.00					1	
145	C-40	1.83		3.68	0.75	0.75	5.78	15.00	1				1	
146	C-40	1.92		3.72	0.78	0.78	5.93	15.00	1				1	
147	C-42	1.71	3.97	3.58	1.77	1.71	5.22	15.00			1		1	
148	C-42	1.71		3.58	1.77	1.71	5.22	15.00					1	
149	C-41	1.92		2.73	0.78	0.78	4.66	15.00	1		1		1	
150	C-41	1.92		3.51	0.78	0.78	5.72	15.00					1	
151	C-41	2.08		3.97	0.85	0.85	6.37	15.00	1				1	
152	C-41	1.75		3.34	0.71	0.71	5.35	15.00	1				1	
153	C-42	1.71	3.97	3.58	1.77	1.71	5.22	15.00					1	
154	C-42	1.71		3.58	1.77	1.71	5.22	15.00					1	
155	C-42	1.71	3.97	3.58	1.77	1.71	5.22	15.00					1	
156	C-42	1.71		3.58	1.77	1.71	5.22	15.00					1	
157	C-43	1.63		2.43	0.66	0.66	4.01	15.00					1	
158	C-43	1.92		3.65	0.78	0.78	5.86	15.00					1	
159	C-43	2.08		3.51	0.85	0.85	5.91	15.00					1	
SHEET TOTAL		50.11	21.90	86.56	31.79	31.60	139.41	428.00	7	2	3		27	

SUMMARY OF QUANTITIES

Q-6

REVISED BY | DATE REVISED

MARISA MANDOCDOC | MOHAMMED HAIDER

CALCULATED-DESIGNED BY | CHECKED BY

FUNCTIONAL SUPERVISOR: MOHAMMED CHOWDHURY

STATE OF CALIFORNIA - DEPARTMENT OF TRANSPORTATION

Caltrans® TRAFFIC DESIGN

S:\design\290801\traffic\submittals\729080pa006.dgn

LAST REVISION 00-00-00 | DATE PLOTTED => 07-SEP-2016 | TIME PLOTTED => 12:27

Dist	COUNTY	ROUTE	POST MILES TOTAL PROJECT	SHEET No.	TOTAL SHEETS
07	LA	1	2.4/7.2	134	200

REGISTERED CIVIL ENGINEER 6/28/16 DATE

6-30-16
PLANS APPROVAL DATE

REGISTERED PROFESSIONAL ENGINEER MOHAMMED HAIDER No. 61335 Exp. 6/30/17 CIVIL STATE OF CALIFORNIA

THE STATE OF CALIFORNIA OR ITS OFFICERS OR AGENTS SHALL NOT BE RESPONSIBLE FOR THE ACCURACY OR COMPLETENESS OF SCANNED COPIES OF THIS PLAN SHEET.

ROADWAY QUANTITIES

LOCATION No.	SHEET No.	MINOR CONCRETE (Misc CONSTRUCTION) (RSC) CURB & GUTTER	DRIVEWAY	CURB RAMP	LCB RAPID SETTING	ROADWAY EXCAVATION	REMOVE CONCRETE	DETECTABLE WARNING SURFACE	TEMPORARY DRAINAGE INLET PROTECTION	ADJUST VALVE BOX FRAME & COVER TO GRADE	ADJUST PULL BOX	ADJUST MANHOLE TO GRADE	PRE/POST CONSTRUCTION SURVEY	RELOCATE ROADSIDE SIGN
		CY	CY	CY	CY	CY	CY	SQFT	EA	EA	EA	EA	EA	EA
160	C-44	2.50		4.49	1.02	1.02	7.09	15.00					1	
161	C-44	3.67		6.45	1.50	1.50	10.67	15.00					1	
162	C-44	3.33		5.64	1.36	1.36	9.21	15.00	1				1	
163	C-44	2.25		3.63	0.92	0.92	6.22	15.00	1				1	
164	C-45	1.75		3.16	0.71	0.71	4.96	15.00					1	
165	C-45	2.00		2.27	0.82	0.82	4.28	18.00					1	
167	C-45	1.75		1.54	0.71	0.71	3.29	15.00	1				1	
168	C-45	1.83		3.59	0.75	0.75	5.60	15.00					1	
169	C-45	1.83		3.59	0.75	0.75	5.60	15.00					1	
166	C-45	1.92		2.25	0.78	0.78	4.45	15.00					1	
170	C-46	1.42	2.60	2.77	1.28	1.24	4.12	15.00					1	
171	C-46	1.42		2.77	1.28	1.24	4.12	15.00					1	
172	C-47	2.17		3.40	0.88	0.88	5.67	15.00	1				1	
173	C-47	2.13		3.74	0.87	0.87	6.18	15.00					1	
178	C-47	1.75		3.27	0.71	0.71	5.28	15.00					1	
175	C-46	1.42	2.60	2.77	1.28	1.24	4.12	15.00					1	
174	C-46	1.42		2.77	1.28	1.24	4.12	15.00					1	
176	C-46	2.50		4.34	1.02	1.02	6.91	18.00					1	
177	C-46	2.33		4.53	0.95	0.95	7.22	18.00					1	
180	C-48	2.50		2.05	1.02	1.02	4.61	18.00					1	
179	C-48	2.42		4.15	0.99	0.99	6.68	15.00					1	
182	C-48	0.00					0.15	45.00						
181	C-48	3.33		3.12	1.36	1.36	6.36	15.00					1	
SHEET TOTAL		47.63	5.20	76.29	22.24	22.08	126.91	387.00	4				22	

REVISED BY | DATE REVISED

MARISA MANDOCDOC | MOHAMMED HAIDER

CALCULATED-DESIGNED BY | CHECKED BY

FUNCTIONAL SUPERVISOR | MOHAMMED CHOWDHURY

STATE OF CALIFORNIA - DEPARTMENT OF TRANSPORTATION
Caltrans® TRAFFIC DESIGN

S:\design\290801\traffic\submittals\729080pa007.dgn

SUMMARY OF QUANTITIES

Q-7

LAST REVISION 00-00-00 | DATE PLOTTED => 07-SEP-2016 | TIME PLOTTED => 12:27

Dist	COUNTY	ROUTE	POST MILES TOTAL PROJECT	SHEET No.	TOTAL SHEETS
07	LA	1	2.4/7.2	135	200

REGISTERED CIVIL ENGINEER 6/28/16 DATE

6-30-16
PLANS APPROVAL DATE

REGISTERED PROFESSIONAL ENGINEER MOHAMMED HAIDER No. 61335 Exp. 6/30/17 CIVIL STATE OF CALIFORNIA

THE STATE OF CALIFORNIA OR ITS OFFICERS OR AGENTS SHALL NOT BE RESPONSIBLE FOR THE ACCURACY OR COMPLETENESS OF SCANNED COPIES OF THIS PLAN SHEET.

ROADWAY QUANTITIES

	SHEET No.	MINOR CONCRETE (Misc CONSTRUCTION) (RSC) CURB & GUTTER	DRIVEWAY	CURB RAMP	LCB RAPID SETTING	ROADWAY EXCAVATION	REMOVE CONCRETE	DETECTABLE WARNING SURFACE	TEMPORARY DRAINAGE INLET PROTECTION	ADJUST VALVE BOX FRAME & COVER TO GRADE	ADJUST PULL BOX	ADJUST MANHOLE TO GRADE	PRE/POST CONSTRUCTION SURVEY	RELOCATE ROADSIDE SIGN
		CY	CY	CY	CY	CY	CY	SQFT	EA	EA	EA	EA	EA	EA
SHEET TOTAL	Q-1	60.22	0.00	94.79	29.65	24.59	159.58	405.00					24	1
SHEET TOTAL	Q-2	58.67	4.80	89.79	26.54	26.41	152.94	459.00	5				22	
SHEET TOTAL	Q-3	54.88	9.04	62.52	27.07	26.90	121.18	459.00	4	3	8		27	
SHEET TOTAL	Q-4	52.27	10.77	58.10	24.65	24.46	113.36	483.00	3	4		2	26	
SHEET TOTAL	Q-5	55.07	9.77	61.60	27.91	27.76	121.98	471.00	2	2	2	1	27	
SHEET TOTAL	Q-6	50.11	21.90	86.56	31.79	31.60	139.41	428.00	7	2	3		27	
SHEET TOTAL	Q-7	47.63	5.20	76.29	22.24	22.08	126.91	387.00	4				22	
SUB TOTAL		378.84	61.48	529.65	189.85	183.80	935.36	3092.00	25	11	13	3	175	1
GRAND TOTAL		969.97			189.85	183.80	935.36	3092.00	25	11	13	3	175	1

SUMMARY OF QUANTITIES

Q-8

REVISED BY | DATE REVISED

MARISA MANDOCDOC | MOHAMMED HAIDER

CALCULATED-DESIGNED BY | CHECKED BY

FUNCTIONAL SUPERVISOR

MOHAMMED CHOWDHURY

STATE OF CALIFORNIA - DEPARTMENT OF TRANSPORTATION

Caltrans® TRAFFIC DESIGN

S:\desig\290801\traffic\submittals\729080pa008.dgn

LAST REVISION 00-00-00 | DATE PLOTTED => 07-SEP-2016 | TIME PLOTTED => 12:27

Dist	COUNTY	ROUTE	POST MILES TOTAL PROJECT	SHEET No.	TOTAL SHEETS
07	LA	1	2.4/7.2	136	200

Kenny Nguyen 6/28/16
REGISTERED ELECTRICAL ENGINEER DATE

6-30-16
PLANS APPROVAL DATE

REGISTERED PROFESSIONAL ENGINEER KENNY NGUYEN No. E17759 Exp. 06-30-18 ELECTRICAL STATE OF CALIFORNIA

THE STATE OF CALIFORNIA OR ITS OFFICERS OR AGENTS SHALL NOT BE RESPONSIBLE FOR THE ACCURACY OR COMPLETENESS OF SCANNED COPIES OF THIS PLAN SHEET.

NOTES: (FOR SHEETS E-1, E-2)

1. FOR ACCURATE RIGHT OF WAY DATA, CONTACT RIGHT OF WAY ENGINEERING AT THE DISTRICT OFFICE.
2. FOR CURB RAMP INFORMATION AT THIS LOCATION, SEE CONSTRUCTION DETAILS (CURB RAMPS).
3. SEE NEW LOOP DETECTOR DETAIL SHEET.

LEGEND: (FOR SHEETS E-1, E-2)

1 RC HPS LUMINAIRE. INSTALL 165 W LED Lum

2 RC PEDESTRIAN SIGNAL HEAD AND PBA. INSTALL LED COUNTDOWN Ped SIGNAL FACE MODULES IN NEW HOUSING

3 RC CONDUCTORS

4 RC Exist CCTV 45 POLE, Ped Sig HEAD, VEHICULAR Sig HEAD AND PBA. RL Exist CCTV AND COMPOSITE CABLES TO NEW CCTV POLE

5 RC Exist TYPE 15TS STANDARD

6 INSTALL APS

LEGEND: (Cont)

7 RC Exist 12SMFO AND FOSE. ADD 12SMFO AND FOSE. RE-SPLICE 12SMFO TO Exist 60SMFO CONSISTENT WITH Exist CONFIGURATION.

8 TERMINATE 12SMFO IN Exist C-MIC.

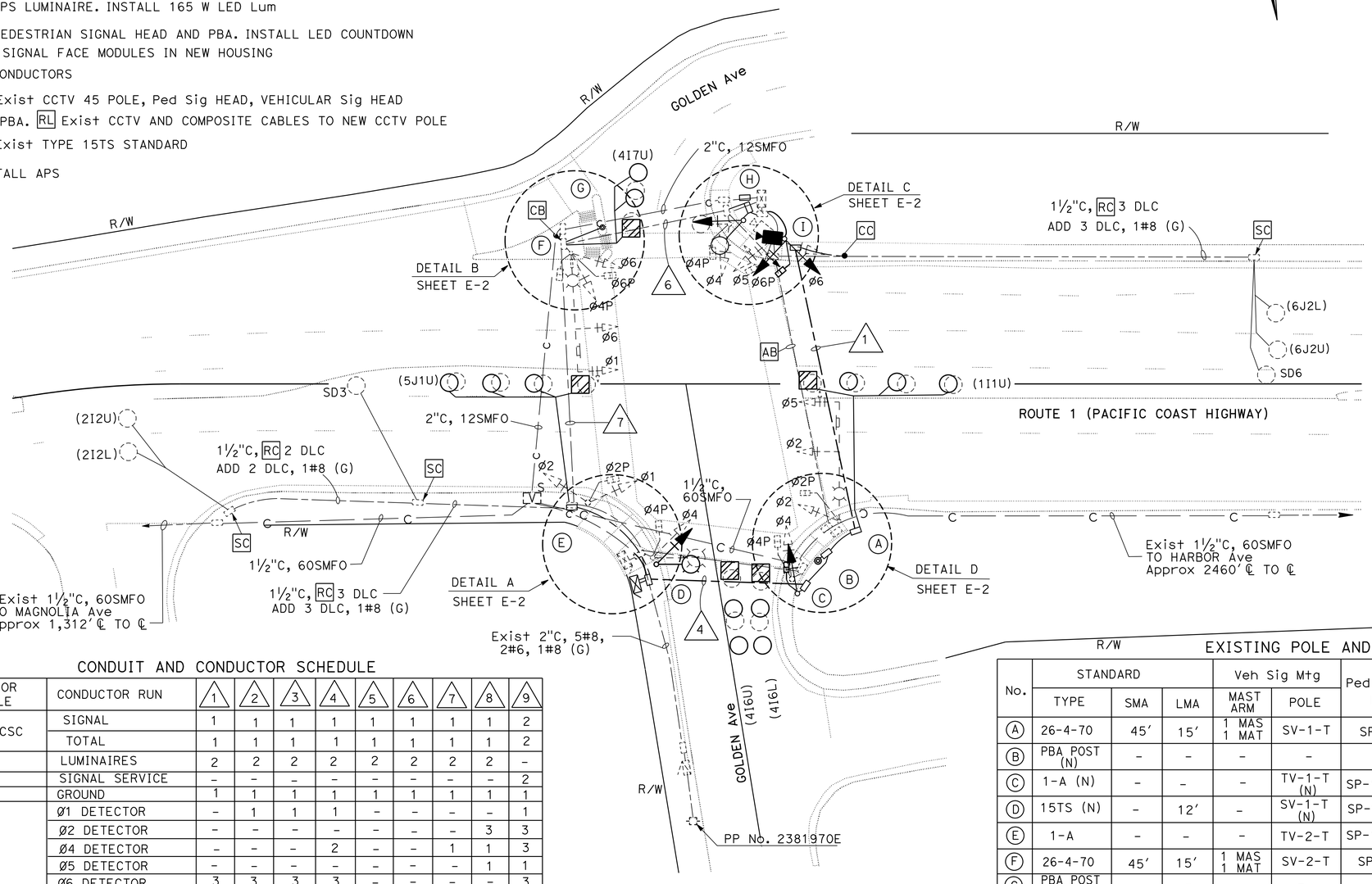

EXISTING PHASE DIAGRAM

	GROUP 1		GROUP 2	
RING A			NOT USED	
	PHASE 1	PHASE 2	PHASE 3	PHASE 4
RING B			NOT USED	NOT USED
	PHASE 5	PHASE 6	PHASE 7	PHASE 8

SYMBOL: (FOR SHEETS E-1, E-2)

SPLICE VAULT WITH SPLICE ENCLOSURE

ABBREVIATION: (FOR SHEETS E-1, E-24)

C-MIC	CABINET MOUNTED INTERFACE CENTER
FOSE	FIBER OPTIC SPLICE ENCLOSURE
12SMFO	12 SINGLEMODE FIBER OPTIC CABLE
60SMFO	60 SINGLEMODE FIBER OPTIC CABLE

CONDUIT AND CONDUCTOR SCHEDULE

AWG OR CABLE	CONDUCTOR RUN	1	2	3	4	5	6	7	8	9
#28 CSC	SIGNAL	1	1	1	1	1	1	1	1	2
	TOTAL	1	1	1	1	1	1	1	1	2
#8	LUMINAIRES	2	2	2	2	2	2	2	2	-
#6	SIGNAL SERVICE	-	-	-	-	-	-	-	-	2
#8	GROUND	1	1	1	1	1	1	1	1	1
DLC	Ø1 DETECTOR	-	1	1	1	-	-	-	-	1
	Ø2 DETECTOR	-	-	-	-	-	-	-	3	3
	Ø4 DETECTOR	-	-	-	2	-	-	1	1	3
	Ø5 DETECTOR	-	-	-	-	-	-	-	1	1
	Ø6 DETECTOR	3	3	3	3	-	-	-	-	3
	TOTAL	3	4	4	7	-	-	1	5	11
#8	CCTV CABINET	-	-	-	-	3	3	3	3	-
12SMFO		-	-	-	-	-	-	-	-	1
CONDUIT SIZE		3"	3"	3"	3"	3"	3" (E)	3" (E)	3"	2-3" 1-2"

(E) = EXISTING

EXISTING POLE AND EQUIPMENT SCHEDULE

No.	STANDARD TYPE	STANDARD SMA	STANDARD LMA	Veh Sig M+g MAST ARM	Veh Sig M+g POLE	Ped SIGNAL M+g	APS Ø	APS ARROW	LED LUMINAIRE	REFLECTORIZED SNS
A	26-4-70	45'	15'	1 MAS 1 MAT	SV-1-T	SP-1-T	-	-	165 W (N)	GOLDEN AVENUE
B	PBA POST (N)	-	-	-	-	-	4 (N)	→	-	-
C	1-A (N)	-	-	-	TV-1-T (N)	SP-1-T (N)	2 (N)	→	-	-
D	15TS (N)	-	12'	-	SV-1-T (N)	SP-1-T (N)	2 (N)	←	165 W (N)	-
E	1-A	-	-	-	TV-2-T	SP-1-T (N)	4 (N)	→	-	-
F	26-4-70	45'	15'	1 MAS 1 MAT	SV-2-T	SP-2-T	4 (N)	→	165 W (N)	GOLDEN AVENUE
G	PBA POST (N)	-	-	-	-	-	6 (N)	←	-	-
H	15TS (N)	-	12'	-	SV-1-T (N)	SP-1-T (N)	6 (N)	→	165 W (N)	-
I	CCTV45 (N)	-	-	-	SV-2-T (N)	SP-1-T (N)	4 (N)	←	-	-

(N) NEW

FOR POLE I, SEE SHEET SES-1

APPROVED FOR ELECTRICAL WORK ONLY

MODIFYING EXISTING ELECTRICAL SYSTEM

SCALE 1"=20'

E-1

STATE OF CALIFORNIA - DEPARTMENT OF TRANSPORTATION
Caltrans® TRAFFIC DESIGN

FUNCTIONAL SUPERVISOR: FATEMEH ANSARI
CALCULATED-DESIGNED BY: KENNY NGUYEN
CHECKED BY: FATEMEH ANSARI
REVISED BY / DATE REVISED

LAST REVISION 00-00-00
DATE PLOTTED => 07-SEP-2016
TIME PLOTTED => 12:27

Dist	COUNTY	ROUTE	POST MILES TOTAL PROJECT	SHEET No.	TOTAL SHEETS
07	LA	1	2.4/7.2	137	200

Kenny Nguyen 6/28/16
REGISTERED ELECTRICAL ENGINEER DATE

6-30-16
PLANS APPROVAL DATE

REGISTERED PROFESSIONAL ENGINEER KENNY NGUYEN No. E17759 Exp. 06-30-18 ELECTRICAL STATE OF CALIFORNIA

THE STATE OF CALIFORNIA OR ITS OFFICERS OR AGENTS SHALL NOT BE RESPONSIBLE FOR THE ACCURACY OR COMPLETENESS OF SCANNED COPIES OF THIS PLAN SHEET.

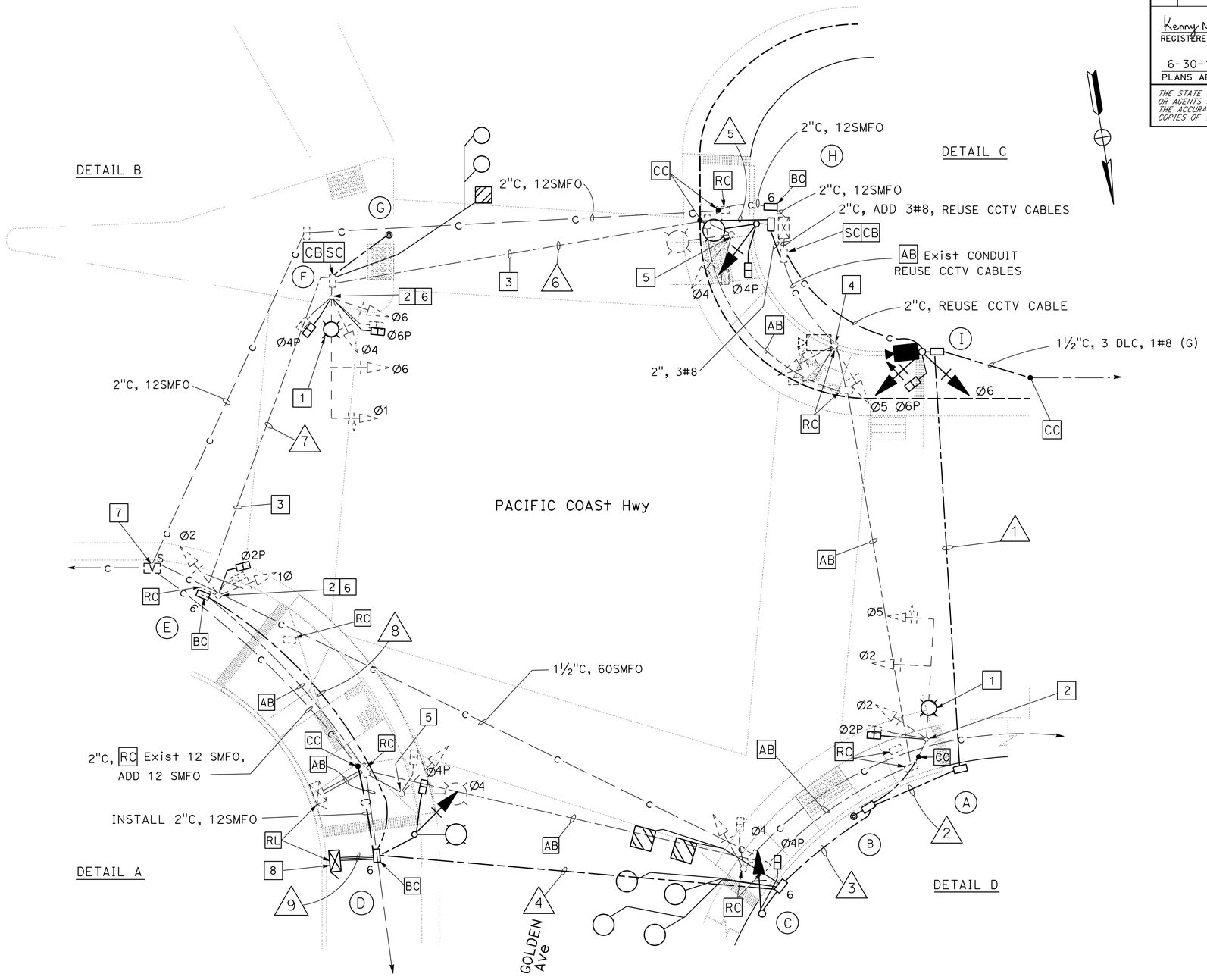

APPROVED FOR ELECTRICAL WORK ONLY

MODIFYING EXISTING ELECTRICAL SYSTEM

NO SCALE

E-2

STATE OF CALIFORNIA - DEPARTMENT OF TRANSPORTATION
Caltrans® **TRAFFIC DESIGN**

FUNCTIONAL SUPERVISOR: FATEMEH ANSARI
CALCULATED-DESIGNED BY: KENNY NGUYEN
CHECKED BY: FATEMEH ANSARI
REVISED BY
DATE REVISED

LAST REVISION 00-00-00
DATE PLOTTED => 07-SEP-2016
TIME PLOTTED => 12:27

BORDER LAST REVISED 7/2/2010
USERNAME => s115484
DGN FILE => 729080ua002.dgn
RELATIVE BORDER SCALE IS IN INCHES 0 1 2 3
UNIT 1879
PROJECT NUMBER & PHASE 07120000751

Dist	COUNTY	ROUTE	POST MILES TOTAL PROJECT	SHEET No.	TOTAL SHEETS
07	LA	1	2.4/7.2	138	200

Kenny Nguyen 6/28/16
REGISTERED ELECTRICAL ENGINEER DATE

6-30-16
PLANS APPROVAL DATE

REGISTERED PROFESSIONAL ENGINEER KENNY NGUYEN No. E17759 Exp. 06-30-18 ELECTRICAL STATE OF CALIFORNIA

THE STATE OF CALIFORNIA OR ITS OFFICERS OR AGENTS SHALL NOT BE RESPONSIBLE FOR THE ACCURACY OR COMPLETENESS OF SCANNED COPIES OF THIS PLAN SHEET.

NOTES: (FOR SHEETS E-3, E-4)

1. FOR ACCURATE RIGHT OF WAY DATA, CONTACT RIGHT OF WAY ENGINEERING AT THE DISTRICT OFFICE.
2. FOR CURB RAMP INFORMATION AT THIS LOCATION, SEE CONSTRUCTION DETAILS (CURB RAMP).
3. SEE CONDUIT AND CONDUCTOR SCHEDULES, POLE AND EQUPMENT SCHEDULES SHEET.

LEGEND: (THIS SHEET)

1 RC HPS LUMINARE, INSTALL 165W LED Lum

2 RC PEDESTRIAN SIGNAL HEAD and PBA. INSTALL APS AND LED COUNT DOWN Ped SIGNAL FACE MODULES IN NEW HOUSING

3 RC EXISTING PULL BOX AND INSTALL NEW PULL BOX AT THE SAME LOCATION

EXISTING PHASE DIAGRAM

	GROUP 1		GROUP 2	
RING A	NOT USED	←→	NOT USED	↑↓
	PHASE 1	PHASE 2	PHASE 3	PHASE 4
RING B	NOT USED	←→	NOT USED	NOT USED
	PHASE 5	PHASE 6	PHASE 7	PHASE 8

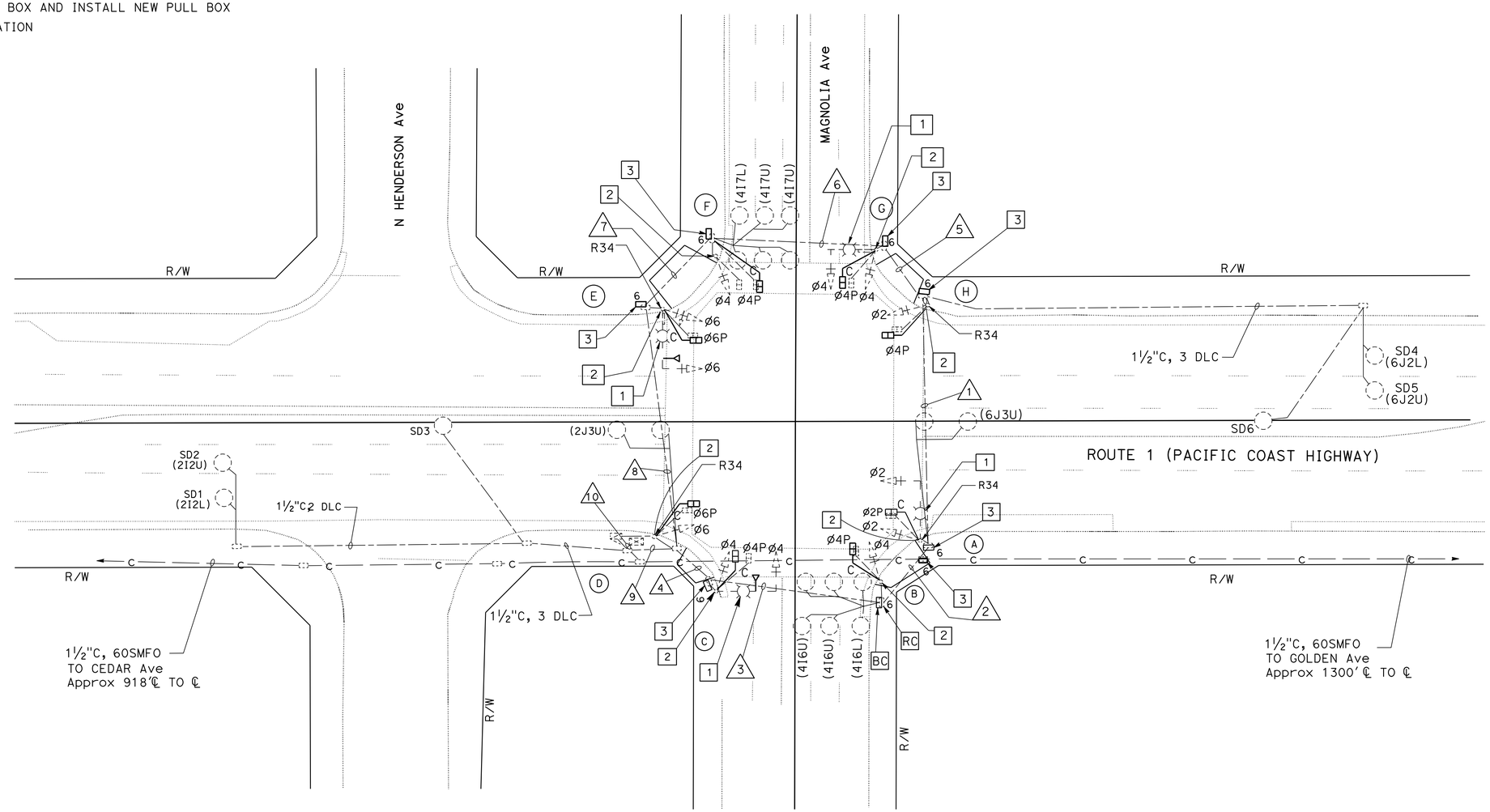

MODIFYING EXISTING ELECTRICAL SYSTEM

SCALE 1"=20'

APPROVED FOR ELECTRICAL WORK ONLY

E-3

REVISED BY	DATE REVISED

CALCULATED-DESIGNED BY	CHECKED BY
KENNY NGUYEN	FATEMEH ANSARI

FUNCTIONAL SUPERVISOR: FATEMEH ANSARI

STATE OF CALIFORNIA - DEPARTMENT OF TRANSPORTATION
Caltrans
TRAFFIC DESIGN

LAST REVISION 00-00-00
DATE PLOTTED => 07-SEP-2016
TIME PLOTTED => 12:27

Dist	COUNTY	ROUTE	POST MILES TOTAL PROJECT	SHEET No.	TOTAL SHEETS
07	LA	1	2.4/7.2	139	200

Kenny Nguyen 6/28/16
REGISTERED ELECTRICAL ENGINEER DATE

6-30-16
PLANS APPROVAL DATE

REGISTERED PROFESSIONAL ENGINEER KENNY NGUYEN No. E17759 Exp. 06-30-18 ELECTRICAL STATE OF CALIFORNIA

THE STATE OF CALIFORNIA OR ITS OFFICERS OR AGENTS SHALL NOT BE RESPONSIBLE FOR THE ACCURACY OR COMPLETENESS OF SCANNED COPIES OF THIS PLAN SHEET.

EXISTING CONDUIT AND CONDUCTOR SCHEDULE

AWG OR CABLE	CONDUCTOR RUN	1	2	3	4	5	6	7	8	9	10
#28 CSC	SIGNAL	2	2	2	2	2	2	2	2	2	2
	TOTAL	2	2	2	2	2	2	2	2	2	2
#8	LUMINAIRES	-	2	2	2	-	2	2	2	2	-
#8	SERVICE	-	-	-	-	-	-	-	-	-	2
#10	GROUND	1	1	1	1	1	1	1	1	1	1
DLC	Ø2 DETECTOR	-	-	-	-	-	-	-	-	1	3
	Ø4 DETECTOR			2	2	-	-	2	2	4	4
	Ø6 DETECTOR	3	3	3	3	-	-	-	-	3	3
	TOTAL	3	3	5	5	-	-	2	2	8	10
#20	EVUC				1				1	2	2
12SMFO	Comm										1
CONDUIT SIZE		3"	3"	3"	3"	3"	3"	3"	3"	3"	2-3" 1-2"

EXISTING POLE AND EQUIPMENT SCHEDULE

No.	STANDARD			Veh Sig Mtg		Ped SIGNAL	APS		LED LUMINAIRE	SNS
	TYPE	SMA	LMA	MAST ARM	POLE	Mtg	Ø	ARROW		
A	17-2-70	20'	12'	1 MAT	SV-1-T	SP-1-T	4(N)	→	165 W (N)	MAGNOLIA AVENUE
B	1-A	-	-	-	-	-	6(N)	→	-	-
C	17-2-70	18'	12'	1 MAT	SV-1-T	SP-1-T	6(N)	←	165 W (N)	PACIFIC COAST HIGHWAY
D	1-A	-	-	-	TV-1-T	SP-1-T	4(N)	→	-	-
E	17-2-70	20'	12'	1 MAT	SV-1-T	SP-1-T	4(N)	←	165 W (N)	MAGNOLIA AVENUE
F	1-A	-	-	-	TV-1-T	SP-1-T	2(N)	→		
G	17-2-70	18'	12'	1 MAT	SV-1-T	SP-1-T	2(N)	←	165 W (N)	PACIFIC COAST HIGHWAY
H	1-A	-	-	-	TV-1-T	SP-1-T	4(N)	←	-	-

(N) NEW

MODIFYING EXISTING ELECTRICAL SYSTEM

E-4

STATE OF CALIFORNIA - DEPARTMENT OF TRANSPORTATION
Caltrans® TRAFFIC DESIGN

FUNCTIONAL SUPERVISOR: FATEMEH ANSARI
CALCULATED-DESIGNED BY: KENNY NGUYEN
CHECKED BY: FATEMEH ANSARI
REVISED BY
DATE REVISED

LAST REVISION 00-00-00
DATE PLOTTED => 07-SEP-2016
TIME PLOTTED => 12:28

Dist	COUNTY	ROUTE	POST MILES TOTAL PROJECT	SHEET No.	TOTAL SHEETS
07	LA	1	2.44/7.22	140	200

Kenny Nguyen 6/28/16
REGISTERED ELECTRICAL ENGINEER DATE

6-30-16
PLANS APPROVAL DATE

REGISTERED PROFESSIONAL ENGINEER KENNY NGUYEN No. E17759 Exp. 06-30-18 ELECTRICAL STATE OF CALIFORNIA

THE STATE OF CALIFORNIA OR ITS OFFICERS OR AGENTS SHALL NOT BE RESPONSIBLE FOR THE ACCURACY OR COMPLETENESS OF SCANNED COPIES OF THIS PLAN SHEET.

NOTES: (THIS SHEET)

1. FOR ACCURATE RIGHT OF WAY DATA, CONTACT RIGHT OF WAY ENGINEERING AT THE DISTRICT OFFICE.
2. FOR CURB RAMP INFORMATION AT THIS LOCATION, SEE CONSTRUCTION DETAILS (CURB RAMPS).

LEGEND: (THIS SHEET)

1 RC HPS LUMINAIRE. INSTALL 165 W Lum

2 RC PEDESTRIAN SIGNAL HEAD AND PBA. INSTALL APS AND Ped COUNTDOWN PEDESTRIAN SIGNAL FACE MODULES IN NEW HOUSING.

3 RC EXISTING TYPE 1-A

4 RC EXISTING PULL BOX AND INSTALL NEW PULL BOX AT THE SAME LOCATION

EXISTING POLE AND EQUIPMENT SCHEDULE

	STANDARD			LUMINAIRE	SIGNAL MOUNTING		Ped Sig	APS		SNS
No.	TYPE	SMA	LMA	LED	POLE	MAST ARM	Mtg	ø	ARROW	
A	17-2-70	20′	12′	165 W (N)	SV-1-T	1-MAS	SP-1-T	4(N)	→	CEDAR Ave
B	1-A (N)	-	-	-	TV-1-T(N)	-	SP-1-T(N)	6(N)	→	
C	17-2-70	15′	12′	165 W (N)	SV-1-T	1-MAS	SP-1-T	6(N)	←	
D	1-A	-	-	-	TV-1-T	-	SP-1-T	4(N)	→	
E	17-2-70	20′	12′	165 W (N)	SV-1-T	1-MAS	SP-1-T	4(N)	←	CEDAR Ave
F	1-A	-	-	-	TV-1-T	-	SP-1-T	2(N)	→	
G	17-1-70	15′	12′	165 W (N)	SV-1-T	1-MAS	SP-1-T	2(N)	←	
H	1-A	-	-	-	TV-1-T	-	SP-1-T	4(N)	←	

(N) NEW

EXISTING PHASE DIAGRAM

	GROUP 1		GROUP 2	
RING A	NOT USED	← →	NOT USED	↑ ↑ ↑ ↑
	PHASE 1	PHASE 2	PHASE 3	PHASE 4
RING B	NOT USED	→ ←	NOT USED	NOT USED
	PHASE 5	PHASE 6	PHASE 7	PHASE 8

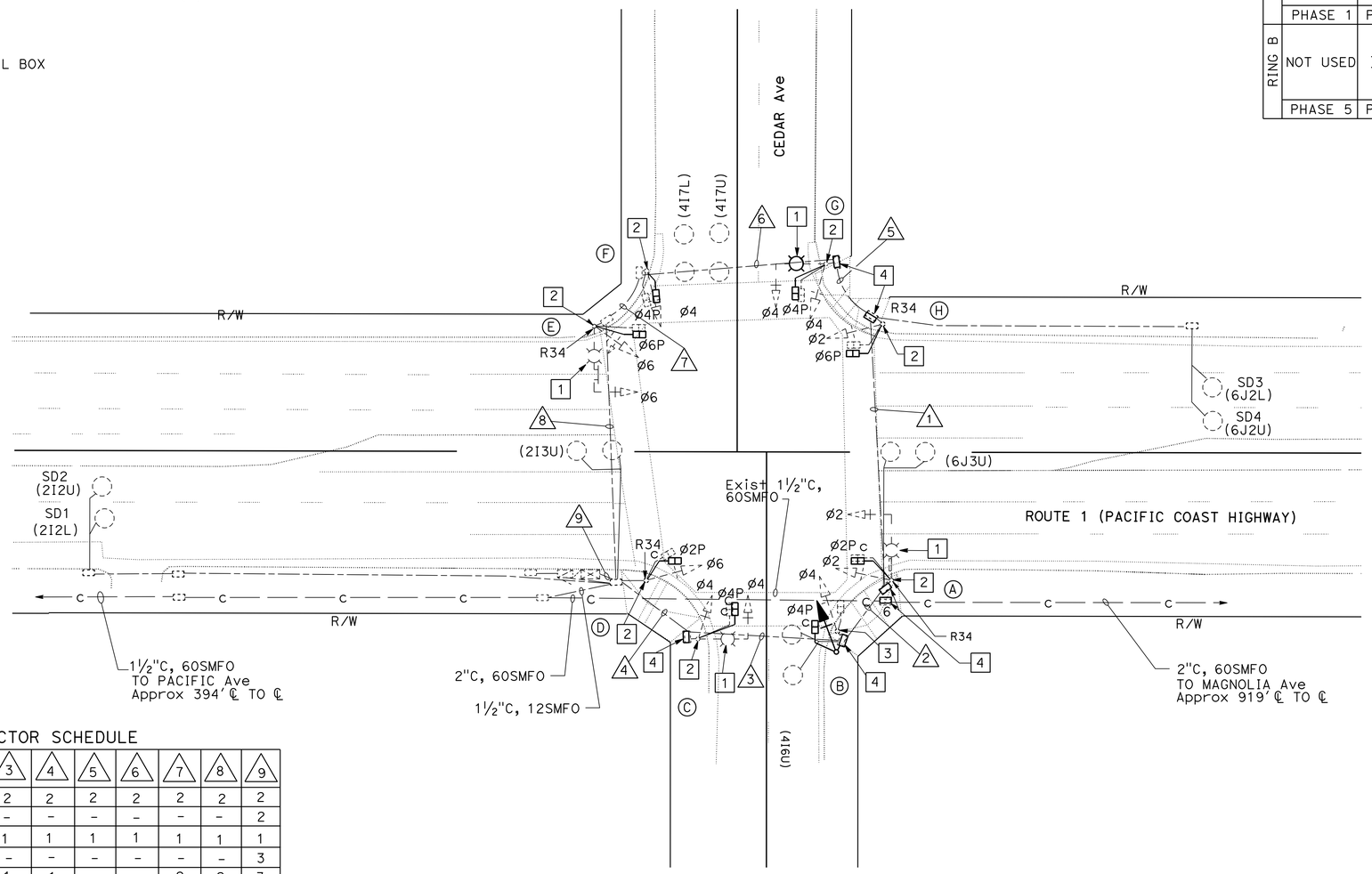

EXISTING CONDUIT AND CONDUCTOR SCHEDULE

AWG OR CABLE	CONDUCTOR RUN	1	2	3	4	5	6	7	8	9
#8	LUMINAIRES	2	2	2	2	2	2	2	2	2
#6	SIGNAL SERVICE	-	-	-	-	-	-	-	-	2
#10	GROUND	1	1	1	1	1	1	1	1	1
DLC	Ø2 DETECTOR	-	-	-	-	-	-	-	-	3
	Ø4 DETECTOR	-	-	1	1	-	-	2	2	3
	Ø6 DETECTOR	2	3	3	3	-	-	-	-	3
TOTAL		2	3	4	4	-	-	2	2	9
28CSC		2	2	2	2	2	2	2	2	2
12SMFO			-	-	-	-	-	-	-	1
CONDUIT SIZE		3"	3"	3"	3"	3"	3"	3"	3"	2-3" 1-2"

APPROVED FOR ELECTRICAL WORK ONLY

MODIFYING EXISTING ELECTRICAL SYSTEM

SCALE 1"=20′

E-5

STATE OF CALIFORNIA - DEPARTMENT OF TRANSPORTATION
Caltrans® TRAFFIC DESIGN

FUNCTIONAL SUPERVISOR: FATEMEH ANSARI
CALCULATED-DESIGNED BY: KENNY NGUYEN
CHECKED BY: FATEMEH ANSARI
REVISED BY / DATE REVISED

LAST REVISION 00-00-00
DATE PLOTTED => 07-SEP-2016
TIME PLOTTED => 12:28

Dist	COUNTY	ROUTE	POST MILES TOTAL PROJECT	SHEET No.	TOTAL SHEETS
07	LA	1	2.4/7.2	141	200

Kenny Nguyen 6/28/16
REGISTERED ELECTRICAL ENGINEER DATE

6-30-16
PLANS APPROVAL DATE

REGISTERED PROFESSIONAL ENGINEER KENNY NGUYEN No. E17759 Exp. 6/30/18 ELECTRICAL STATE OF CALIFORNIA

THE STATE OF CALIFORNIA OR ITS OFFICERS OR AGENTS SHALL NOT BE RESPONSIBLE FOR THE ACCURACY OR COMPLETENESS OF SCANNED COPIES OF THIS PLAN SHEET.

NOTES: (FOR SHEETS E-6, E-7)

1. FOR ACCURATE RIGHT OF WAY DATA, CONTACT RIGHT OF WAY ENGINEERING AT THE DISTRICT OFFICE
2. FOR CURB RAMP INFORMATION AT THIS LOCATION, SEE CONSTRUCTION DETAILS (CURB RAMP)
3. SEE CONDUIT AND CONDUCTOR SCHEDULES, POLE AND EQUPMENT SCHEDULES SHEET.

LEGEND: (THIS SHEET)

1 RC HPS LUMINARE, INSTALL 235W LED Lum

2 RC PEDESTRIAN SIGNAL HEAD and PBA. INSTALL APS AND LED COUNT DOWN Ped SIGNAL FACE MODULES IN NEW HOUSING

3 RC PEDESTRIAN SIGNAL HEAD and PBA.

INSTALL LED COUNT DOWN Ped SIGNAL FACE MODULES IN NEW HOUSING

EXISTING PHASE DIAGRAM

OPERATION:

Ø2 & Ø6 ON VEHICLE RECALL.
Ø4 & Ø8 ON DOUBLE ENTRY.
Ø4 & Ø8 ON TIME DELAY FOR RIGHT TURNERS.

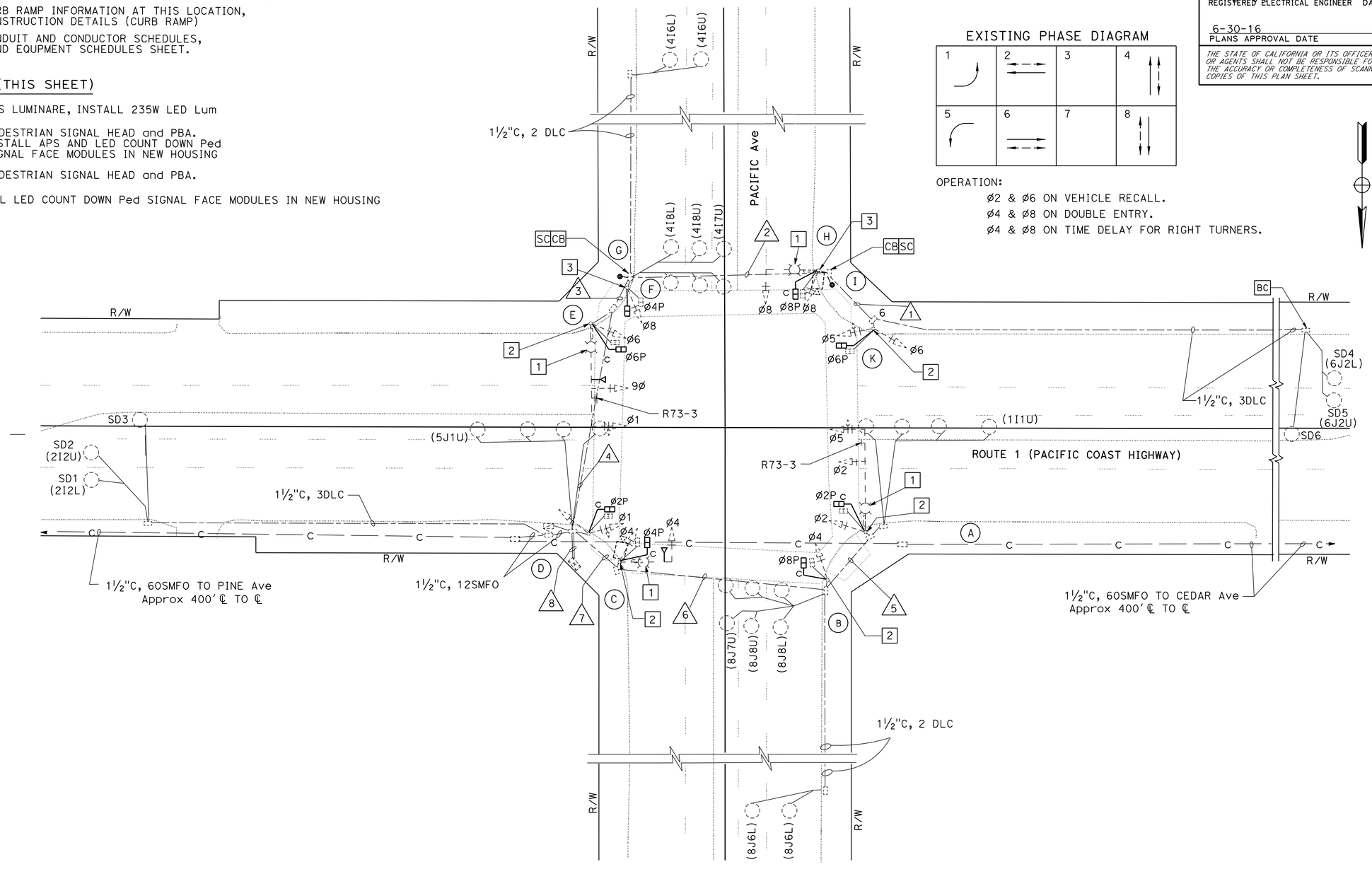

MODIFYING EXISTING ELECTRICAL SYSTEM

SCALE 1"=20'

APPROVED FOR ELECTRICAL WORK ONLY

E-6

STATE OF CALIFORNIA - DEPARTMENT OF TRANSPORTATION
Caltrans® **TRAFFIC DESIGN**

FUNCTIONAL SUPERVISOR: FATEMEH ANSARI
CALCULATED-DESIGNED BY: KENNY NGUYEN
CHECKED BY: FATEMEH ANSARI
REVISED BY / DATE REVISED

LAST REVISION 00-00-00
DATE PLOTTED => 07-SEP-2016
TIME PLOTTED => 12:28

Dist	COUNTY	ROUTE	POST MILES TOTAL PROJECT	SHEET No.	TOTAL SHEETS
07	LA	1	2.4/7.2	142	200

Kenny Nguyen 6/28/16
REGISTERED ELECTRICAL ENGINEER DATE

6-30-16
PLANS APPROVAL DATE

REGISTERED PROFESSIONAL ENGINEER KENNY NGUYEN No. E17759 Exp. 06-30-18 ELECTRICAL STATE OF CALIFORNIA

THE STATE OF CALIFORNIA OR ITS OFFICERS OR AGENTS SHALL NOT BE RESPONSIBLE FOR THE ACCURACY OR COMPLETENESS OF SCANNED COPIES OF THIS PLAN SHEET.

EXISTING CONDUIT AND CONDUCTOR SCHEDULE

AWG OR CABLE	CONDUCTOR RUN	1	2	3	4	5	6	7	8
#28 CSC	SIGNAL	2	2	2	2	2	2	2	2
	TOTAL	2	2	2	2	2	2	2	2
#10	LUMINAIRES	-	2	2	2	2	2	2	-
#6	SERVICE	-	-	-	-	-	-	-	2
#12	SIGN LIGHTING	-	-	-	2	2	2	2	-
#10	GROUND	1	1	1	1	1	1	1	1
DLC	Ø1 DETECTOR	-	-	-	-	1	1	1	1
	Ø2 DETECTOR	-	-	-	-	-	-	-	3
	Ø4 DETECTOR	-	-	5	5	-	-	-	5
	Ø5 DETECTOR	-	-	-	-	-	-	-	1
	Ø6 DETECTOR	3	3	3	3	-	-	-	3
	Ø8 DETECTOR	-	-	-	-	-	5	5	5
	TOTAL	3	3	8	8	1	6	6	18
#20	EVUC	-	-	-	3	-	-	3	6
12SMFO	Comm	-	-	-	-	-	-	-	1
VIDEO DETECTION CABLE		-	1	1	1	-	-	1	2
CONDUIT SIZE		3"	3"	3"	3"	3"	3"	3"	2-3"

EXISTING POLE AND EQUIPMENT SCHEDULE

No.	STANDARD			Veh Sig Mtg		Ped SIGNAL	APS		LED LUMINAIRE	SNS
	TYPE	SMA	LMA	MAST ARM	POLE	Mtg	Ø	ARROW		
A	26-4-80	45'	12'	1 MAT 1 MAS	SV-1-T	SP-1-T	8(N)	→	235 W (N)	PACIFIC AVENUE
B	15TS	-	12'	-	SV-1-T	SP-1-T	2(N)	→	235 W (N)	-
C	17-2-70	20'	12'	1 MAS	SV-1-T	SP-1-T	2(N)	←	235 W (N)	PACIFIC COAST HIGHWAY
D	1-A	-	-	-	TV-2-T	SP-1-T	4(N)	→	-	-
E	26-4-80	45'	12'	1 MAT 1 MAS	SV-1-T	SP-1-T	4(N)	←	235 W (N)	PACIFIC AVENUE
F	1-A	-	-	-	TV-1-T	SP-1-T	-	-	-	-
G	PBA POST (N)	-	-	-	-	-	6(N)	←	-	-
H	17-2-70	20'	12'	1 MAS	SV-1-T	SP-1-T			235 W (N)	PACIFIC COAST HIGHWAY
I	PBA POST (N)	-	-	-	-	-	6(N)	→	-	-
K	1-A	-	-	-	TV-2-T	SP-1-T	8(N)	←	-	-

(N) NEW

MODIFYING EXISTING ELECTRICAL SYSTEM

E-7

STATE OF CALIFORNIA - DEPARTMENT OF TRANSPORTATION
Caltrans® TRAFFIC DESIGN

FUNCTIONAL SUPERVISOR: FATEMEH ANSARI
CALCULATED-DESIGNED BY: KENNY NGUYEN
CHECKED BY: FATEMEH ANSARI
REVISED BY
DATE REVISED

LAST REVISION 00-00-00
DATE PLOTTED => 07-SEP-2016
TIME PLOTTED => 12:28

Dist	COUNTY	ROUTE	POST MILES TOTAL PROJECT	SHEET No.	TOTAL SHEETS
07	LA	1	2.4/7.2	143	200

Kenny Nguyen 6/28/16
REGISTERED ELECTRICAL ENGINEER DATE

6-30-16
PLANS APPROVAL DATE

REGISTERED PROFESSIONAL ENGINEER KENNY NGUYEN No. E17759 Exp. 06-30-18 ELECTRICAL STATE OF CALIFORNIA

THE STATE OF CALIFORNIA OR ITS OFFICERS OR AGENTS SHALL NOT BE RESPONSIBLE FOR THE ACCURACY OR COMPLETENESS OF SCANNED COPIES OF THIS PLAN SHEET.

NOTES: (FOR SHEETS E-8, E-9)

1. FOR ACCURATE RIGHT OF WAY DATA, CONTACT RIGHT OF WAY ENGINEERING AT THE DISTRICT OFFICE.
2. FOR CURB RAMP INFORMATION AT THIS LOCATION, SEE CONSTRUCTION DETAILS (CURB RAMP).
3. SEE CONDUIT AND CONDUCTOR SCHEDULES, POLE AND EQUPMENT SCHEDULES SHEET.

EXISTING PHASE DIAGRAM

	GROUP 1		GROUP 2	
RING A	NOT USED		NOT USED	
	PHASE 1	PHASE 2	PHASE 3	PHASE 4
RING B	NOT USED		NOT USED	NOT USED
	PHASE 5	PHASE 6	PHASE 7	PHASE 8

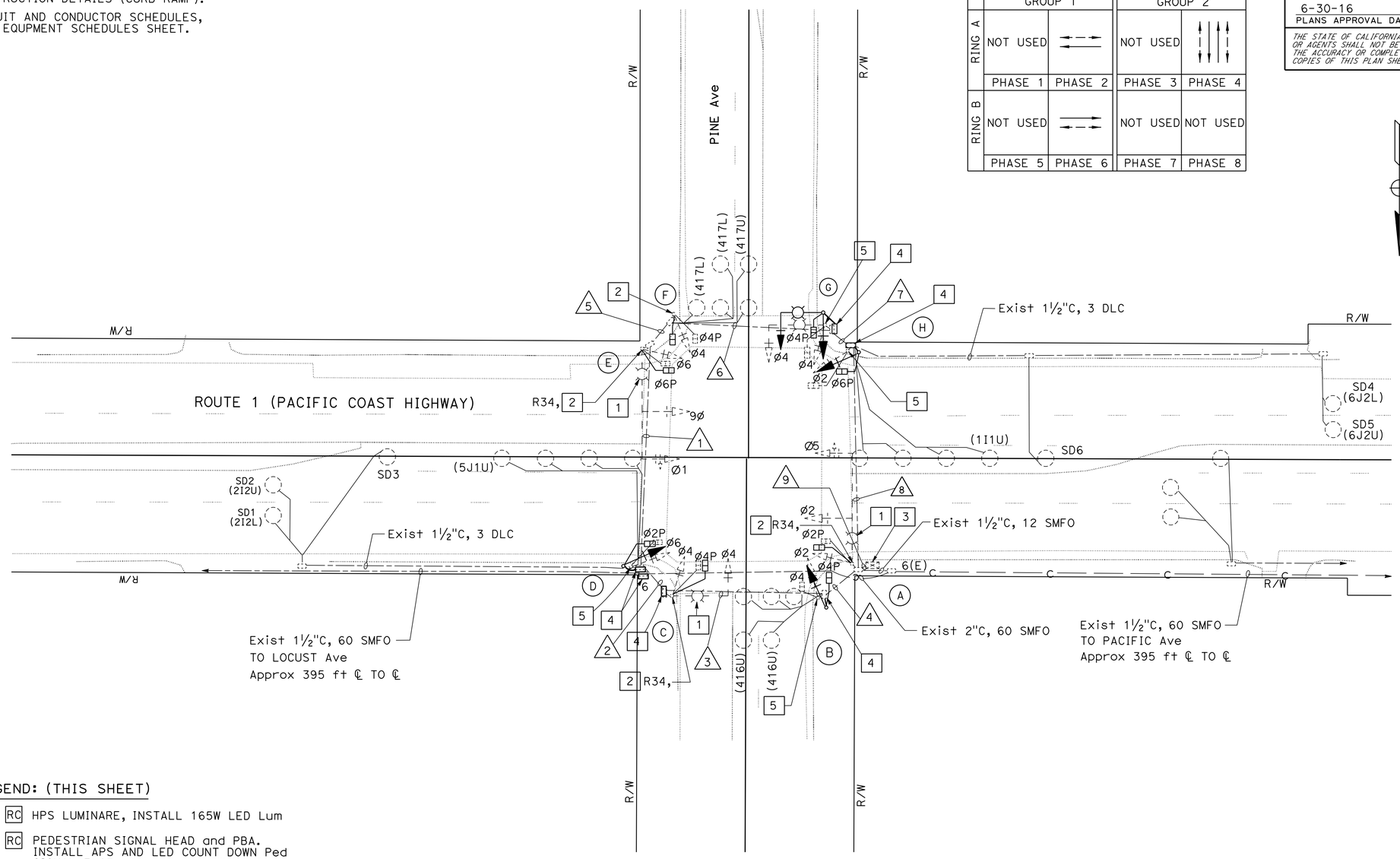

LEGEND: (THIS SHEET)

1 RC HPS LUMINARE, INSTALL 165W LED Lum

2 RC PEDESTRIAN SIGNAL HEAD and PBA. INSTALL APS AND LED COUNT DOWN Ped SIGNAL FACE MODULES IN NEW HOUSING

3 Exist 2070L CONTROLLER WITH FOTM, C-MIC, AND MODEL 2070-6A MODEM IN MODEL 332 CABINET

4 RC PULL BOX, INSTALL NEW PULL BOX AT SAME LOCATION

5 RC SIGNAL POLE COMPLETE. RL R-34 SIGN TO NEW POLE

MODIFYING EXISTING ELECTRICAL SYSTEM

SCALE: 1" = 20'

APPROVED FOR ELECTRICAL WORK ONLY

E-8

STATE OF CALIFORNIA - DEPARTMENT OF TRANSPORTATION
Caltrans TRAFFIC DESIGN

FUNCTIONAL SUPERVISOR: FATEMEH ANSARI
CALCULATED-DESIGNED BY: CESAR HERNANDEZ
CHECKED BY: KENNY NGUYEN
REVISED BY
DATE REVISED

LAST REVISION 00-00-00
DATE PLOTTED => 07-SEP-2016
TIME PLOTTED => 12:28

BORDER LAST REVISED 7/2/2010
USERNAME => s115484
DGN FILE => 729080ua008.dgn
RELATIVE BORDER SCALE IS IN INCHES 0 1 2 3
UNIT 1879
PROJECT NUMBER & PHASE 07120000751

Dist	COUNTY	ROUTE	POST MILES TOTAL PROJECT	SHEET No.	TOTAL SHEETS
07	LA	1	2.4/7.2	144	200

Kenny Nguyen 6/28/16
REGISTERED ELECTRICAL ENGINEER DATE

6-30-16
PLANS APPROVAL DATE

REGISTERED PROFESSIONAL ENGINEER KENNY NGUYEN No. E17759 Exp. 06-30-18 ELECTRICAL STATE OF CALIFORNIA

THE STATE OF CALIFORNIA OR ITS OFFICERS OR AGENTS SHALL NOT BE RESPONSIBLE FOR THE ACCURACY OR COMPLETENESS OF SCANNED COPIES OF THIS PLAN SHEET.

POLE AND EQUIPMENT SCHEDULE

STANDARD				LUMINAIRE	SIGNAL MOUNTING		Ped Sig	APS	REFLECTORIZED SNS	REMARKS
No.	TYPE	SMA	LMA	LED (W)	POLE	MAST ARM	Mtg	ø		
A	26-4-100	45′	12′	165 (N)	SV-1-T	MAT, MAS	SP-1-T	4(N)	PINE AV	
B	1-A (N)	-	-	-	TV-1-T(N)	-	SP-1-T(N)	2(N)	-	R34 (R)
C	17-2-70	15′	12′	165 (N)	SV-1-T	MAS	SP-1-T	2(N)	PAC COAST HWY	
D	1-A (N)	-	-	-	TV-1-T(N)	-	SP-1-T(N)	4(N)	-	R34 (R)
E	26-4-100	45′	12′	165 (N)	SV-1-T	MAT, MAS	SP-1-T	4(N)	PINE AV	
F	1-A	-	-	-	TV-1-T	-	SP-1-T	6(N)	-	R34 (R)
G	17-2-100(N)	15′(N)	12′(N)	165 (N)	SV-1-T(N)	MAS (N)	SP-1-T(N)	6(N)	PAC COAST HWY(R)	R34 (R)
H	1-A (N)	-	-	-	TV-1-T(N)	-	SP-1-T(N)	4(N)	-	R34 (R)

(N) NEW (R) RELOCATED SIGN

EXISTING CONDUIT AND CONDUCTOR SCHEDULE

AWG	CIRCUIT	RUN								
		1	2	3	4	5	6	7	8	9
28 CSC	C1	-	1	1	1	-	1	1	1	2
	C2	1	1	1	1	1	1	1	1	2
#10	SIGNAL COMMON	1	1	1	1	1	1	1	1	2
#8	LUMINAIRE	-	-	2	2	2	2	2	2	-
#6	SERVICE	-	-	-	-	-	-	-	-	2
2#12 DLC	Ø1 DETECTOR	-	-	-	-	-	-	-	1	1
	Ø2 DETECTOR	-	3	3	3	-	-	-	-	3
	Ø4 DETECTOR	-	-	-	2	-	2	2	2	4
	Ø5 DETECTOR	-	1	1	1	-	-	-	-	1
	Ø6 DETECTOR	-	-	-	-	-	-	-	3	3
12 SMFO	COMMUNICATIONS	-	-	-	-	-	-	-	-	1
CONDUIT SIZE		3"	3"	3"	3"	3"	3"	3"	3"	2-3" 1-2"

MODIFYING EXISTING ELECTRICAL SYSTEM

E-9

STATE OF CALIFORNIA - DEPARTMENT OF TRANSPORTATION
Caltrans® TRAFFIC DESIGN

FUNCTIONAL SUPERVISOR: FATEMEH ANSARI
CALCULATED-DESIGNED BY: CESAR HERNANDEZ
CHECKED BY: KENNY NGUYEN
REVISED BY
DATE REVISED

LAST REVISION 00-00-00
DATE PLOTTED => 07-SEP-2016
TIME PLOTTED => 12:28

Dist	COUNTY	ROUTE	POST MILES TOTAL PROJECT	SHEET No.	TOTAL SHEETS
07	LA	1	2.4/7.2	145	200

Kenny Nguyen 6/28/16
REGISTERED ELECTRICAL ENGINEER DATE

6-30-16
PLANS APPROVAL DATE

REGISTERED PROFESSIONAL ENGINEER KENNY NGUYEN No. E17759 Exp. 06-30-18 ELECTRICAL STATE OF CALIFORNIA

THE STATE OF CALIFORNIA OR ITS OFFICERS OR AGENTS SHALL NOT BE RESPONSIBLE FOR THE ACCURACY OR COMPLETENESS OF SCANNED COPIES OF THIS PLAN SHEET.

NOTES: (FOR SHEETS E-10, E-11)

1. FOR ACCURATE RIGHT OF WAY DATA, CONTACT RIGHT OF WAY ENGINEERING AT THE DISTRICT OFFICE.
2. FOR CURB RAMP INFORMATION AT THIS LOCATION, SEE CONSTRUCTION DETAILS (CURB RAMP).
3. SEE CONDUIT AND CONDUCTOR SCHEDULES, POLE AND EQUPMENT SCHEDULES SHEET.

LEGEND: (THIS SHEET)

- 1 RC HPS LUMINARE, INSTALL 165W LED Lum
- 2 RC PEDESTRIAN SIGNAL HEAD and PBA. INSTALL APS AND LED COUNT DOWN Ped SIGNAL FACE MODULE IN NEW HOUSING
- 3 RC PBA. INSTALL APS
- 4 RC PULL BOX, INSTALL NEW PULL BOX AT SAME LOCATION

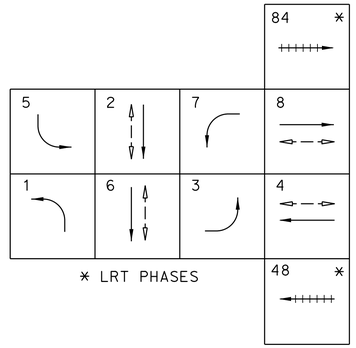

* LRT PHASES

EXISTING PHASE DIAGRAM

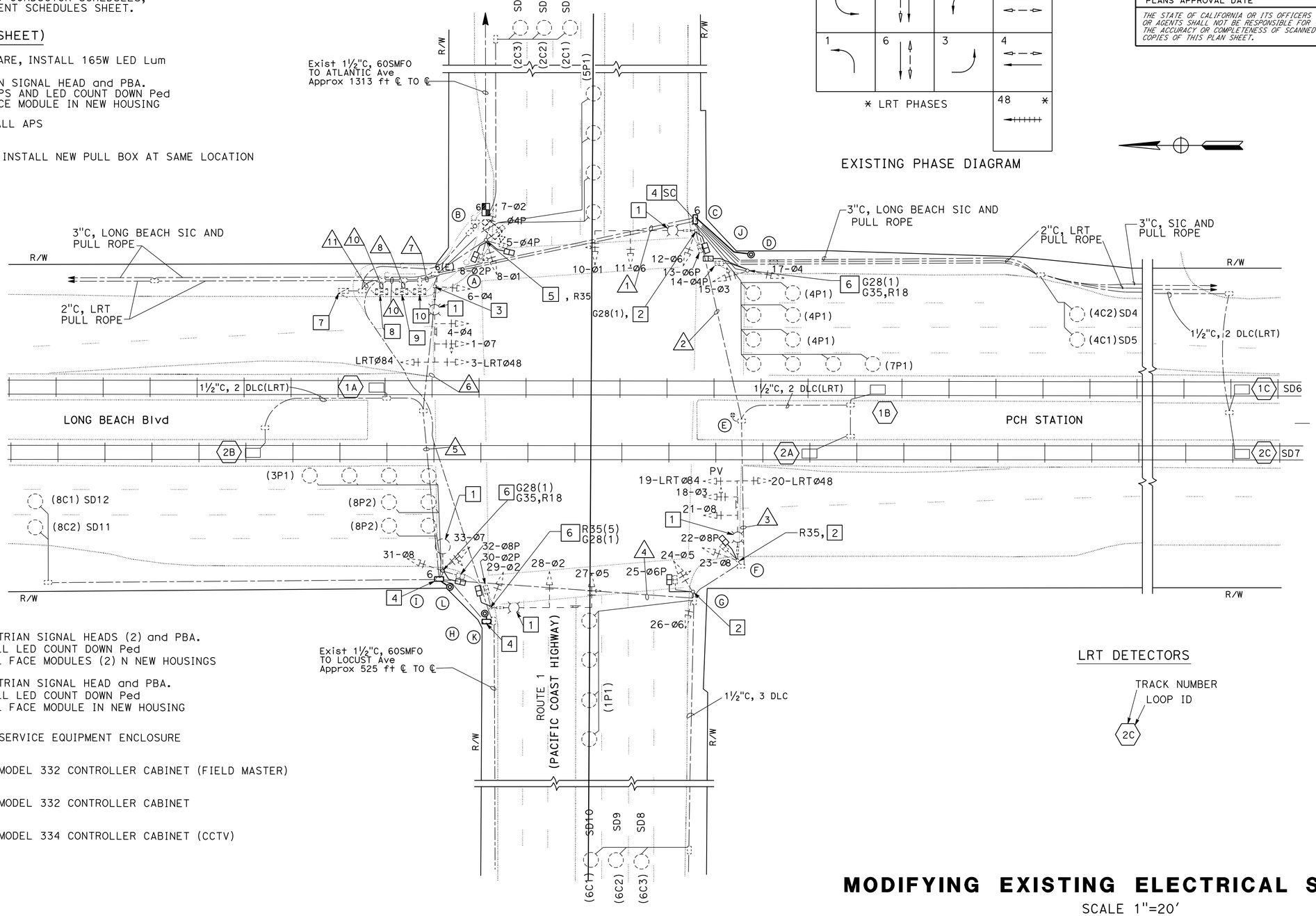

- 5 RC PEDESTRIAN SIGNAL HEADS (2) and PBA. INSTALL LED COUNT DOWN Ped SIGNAL FACE MODULES (2) N NEW HOUSINGS
- 6 RC PEDESTRIAN SIGNAL HEAD and PBA. INSTALL LED COUNT DOWN Ped SIGNAL FACE MODULE IN NEW HOUSING
- 7 EXISTING SERVICE EQUIPMENT ENCLOSURE
- 8 EXISTING MODEL 332 CONTROLLER CABINET (FIELD MASTER)
- 9 EXISTING MODEL 332 CONTROLLER CABINET
- 10 EXISTING MODEL 334 CONTROLLER CABINET (CCTV)

LRT DETECTORS

TRACK NUMBER
LOOP ID
2C

MODIFYING EXISTING ELECTRICAL SYSTEM

SCALE 1"=20'

APPROVED FOR ELECTRICAL WORK ONLY

E-10

REVISED BY	DATE REVISED
CESAR HERNANDEZ	KENNY NGUYEN
CALCULATED-DESIGNED BY	CHECKED BY
FUNCTIONAL SUPERVISOR	FATEMEH ANSARI

STATE OF CALIFORNIA - DEPARTMENT OF TRANSPORTATION
Caltrans
TRAFFIC DESIGN

LAST REVISION 00-00-00 | DATE PLOTTED => 07-SEP-2016 | TIME PLOTTED => 12:28

Dist	COUNTY	ROUTE	POST MILES TOTAL PROJECT	SHEET No.	TOTAL SHEETS
07	LA	1	2.4/7.2	146	200

Kenny Nguyen 6/28/16
REGISTERED ELECTRICAL ENGINEER DATE

6-30-16
PLANS APPROVAL DATE

REGISTERED PROFESSIONAL ENGINEER KENNY NGUYEN No. E17759 Exp. 06-30-18 ELECTRICAL STATE OF CALIFORNIA

THE STATE OF CALIFORNIA OR ITS OFFICERS OR AGENTS SHALL NOT BE RESPONSIBLE FOR THE ACCURACY OR COMPLETENESS OF SCANNED COPIES OF THIS PLAN SHEET.

EXISTING CONDUIT AND CONDUCTOR SCHEDULE

AWG	CIRCUIT	RUN 1	2	3	4	5	6	7	8	9	10	11
28 CSC	PER CITY OF LONG BEACH SPECS	2	2	2	2	2	2	2	2			
24 SIC	PER CITY OF LONG BEACH SPECS	1						1	2			
#8	LUMINAIRE	2			2	2	2	2		2		2
2#12 DLC	Ø1 DETECTOR	1	1	1				1	1			
	Ø2 DETECTOR							3	3			
	Ø3 DETECTOR					1	1	1	1			
	Ø4 DETECTOR	4						4	4			
	Ø5 DETECTOR							1	1			
	Ø6 DETECTOR	3	3	3				3	3			
	Ø7 DETECTOR	1						1	1			
	Ø8 DETECTOR					4	4	4	4			
	1A-LRT DETECTOR						1	1	1			
	2A-LRT DETECTOR	1	1					1	1			
	1B-LRT DETECTOR	1	1					1	1			
	2B-LRT DETECTOR						1	1	1			
	1C-LRT DETECTOR	1						1	1			
	2C-LRT DETECTOR	1						1	1			
#6	SERVICE								2	3	2	6
#12	PHOTOCELL							3		3		3
PULL ROPE		1						1	1			
CALTRANS SIC											2	
12 -PAIR #19 SHIELDED SIC										1		
CONDUIT SIZE		4" 3"	3"	3"	3"	4"	4"	2-4" 1-3"	2-4" 1-3" 1-2"	1-2" 1-3"	1-2" 1-3"	2"

EXISTING POLE AND EQUIPMENT SCHEDULE

STANDARD				LUMINAIRE	SIGNAL MOUNTING		Ped Sig	APS	REFLECTORIZED SNS	REMARKS
No.	TYPE	SMA	LMA	LED (W)	POLE	MAST ARM	Mtg	Ø		
A	19A-8-80	30′	15′	235 (N)	SV-1-UM	-	SP-1-CS	2(N)	PAC COAST HWY	
B	1-A	-	-	-	TV-2-UM	-	SP-1-CS	4(N)	-	
C	26A-4-80	40′	15′	235 (N)	SV-1-UM	2-MAS	SP-1-CS	4(N)	LONG BEACH BLVD	
D	15A	-	15′	235 (N)	SV-2-UM	-	SP-1-CS	-	-	
E	PBA POST	-	-	-	-	-	-	6(N)	-	
F	26A-8-80	35′	15′	235 (N)	SV-1-UM	-	SP-1-CS	6(N)	PAC COAST HWY	
G	1-A	-	-	-	TV-2-UM	-	SP-1-CS	8(N)	-	
H	26A-4-80	40′	15′	235 (N)	SV-1-UM	2-MAS	SP-1-CS	-	LONG BEACH BLVD	
I	15A	-	15′	235 (N)	SV-2-UM	-	SP-1-CS	-	-	
J	PBA POST(N)	-	-	-	-	-	-	6(N)	-	
K	PBA POST(N)	-	-	-	-	-	-	8(N)	-	
L	PBA POST(N)	-	-	-	-	-	-	2(N)	-	

(N) NEW

EXISTING SIGNAL HEAD SCHEDULE

1	2	3	4	5	6	7	8	9	10	11	12	13	14	15	16	17	18	19	20	21	22	23	24	25	26	27	28	29	30	31	32	33
RLA	RLRT	RLRT	R12	HAND	R12	R	RLA	HAND	RLA	R12	R12	HAND	HAND	RLA	NOT USED	R	RLA	RLRT	RLRT	R12	HAND	R12	RLA	HAND	R	RLA	R12	R12	HAND	R	HAND	RLA
YLA	YLRT	YLRT	Y12	MAN	Y12	Y	YLA	MAN	YLA	Y12	Y12	MAN	MAN	YLA		Y	YLA	YLRT	YLRT	Y12	MAN	Y12	YLA	MAN	Y	YLA	Y12	Y12	MAN	Y	MAN	YLA
GLA	WLRT	WLRT	G12		G12	G	GLA		GLA	G12	G12			GLA		G	GLA	WLRT	WLRT	G12		G12	GLA		G	GLA	G12	G12		G		GLA
(PV)		(PV)															(PV)	(PV)														

MODIFYING EXISTING ELECTRICAL SYSTEM

E-11

STATE OF CALIFORNIA - DEPARTMENT OF TRANSPORTATION
Caltrans® TRAFFIC DESIGN

FUNCTIONAL SUPERVISOR: FATEMEH ANSARI
CALCULATED-DESIGNED BY: CESAR HERNANDEZ
CHECKED BY: KENNY NGUYEN
REVISED BY
DATE REVISED

LAST REVISION 00-00-00
DATE PLOTTED => 07-SEP-2016
TIME PLOTTED => 12:28

Dist	COUNTY	ROUTE	POST MILES TOTAL PROJECT	SHEET No.	TOTAL SHEETS
07	LA	1	2.4/7.2	147	200

Kenny Nguyen 6/28/16
REGISTERED ELECTRICAL ENGINEER DATE

6-30-16
PLANS APPROVAL DATE

REGISTERED PROFESSIONAL ENGINEER KENNY NGUYEN No. E17759 Exp. 6-30-18 ELECTRICAL STATE OF CALIFORNIA

THE STATE OF CALIFORNIA OR ITS OFFICERS OR AGENTS SHALL NOT BE RESPONSIBLE FOR THE ACCURACY OR COMPLETENESS OF SCANNED COPIES OF THIS PLAN SHEET.

NOTES: (THIS SHEET)

1. FOR ACCURATE RIGHT OF WAY DATA, CONTACT RIGHT OF WAY ENGINEERING AT THE DISTRICT OFFICE.
2. FOR CURB RAMP INFORMATION AT THIS LOCATION, SEE CONSTRUCTION DETAILS (CURB RAMPS).

LEGEND: (THIS SHEET)

1 RC HPS LUMINAIRE. INSTALL 235 W LED Lum

2 RC PEDESTRIAN SIGNAL HEAD AND PBA. INSTALL LED COUNTDOWN Ped SIGNAL FACE MODULES IN NEW HOUSING

3 RC PULL BOX AND INSTALL NEW PULL BOX AT THE SAME LOCATION

4 RC PEDESTRIAN SIGNAL HEAD AND PBA. INSTALL APS AND LED COUNTDOWN Ped SIGNAL FACE MODULES IN NEW HOUSING

5 RC PBA. INSTALL APS

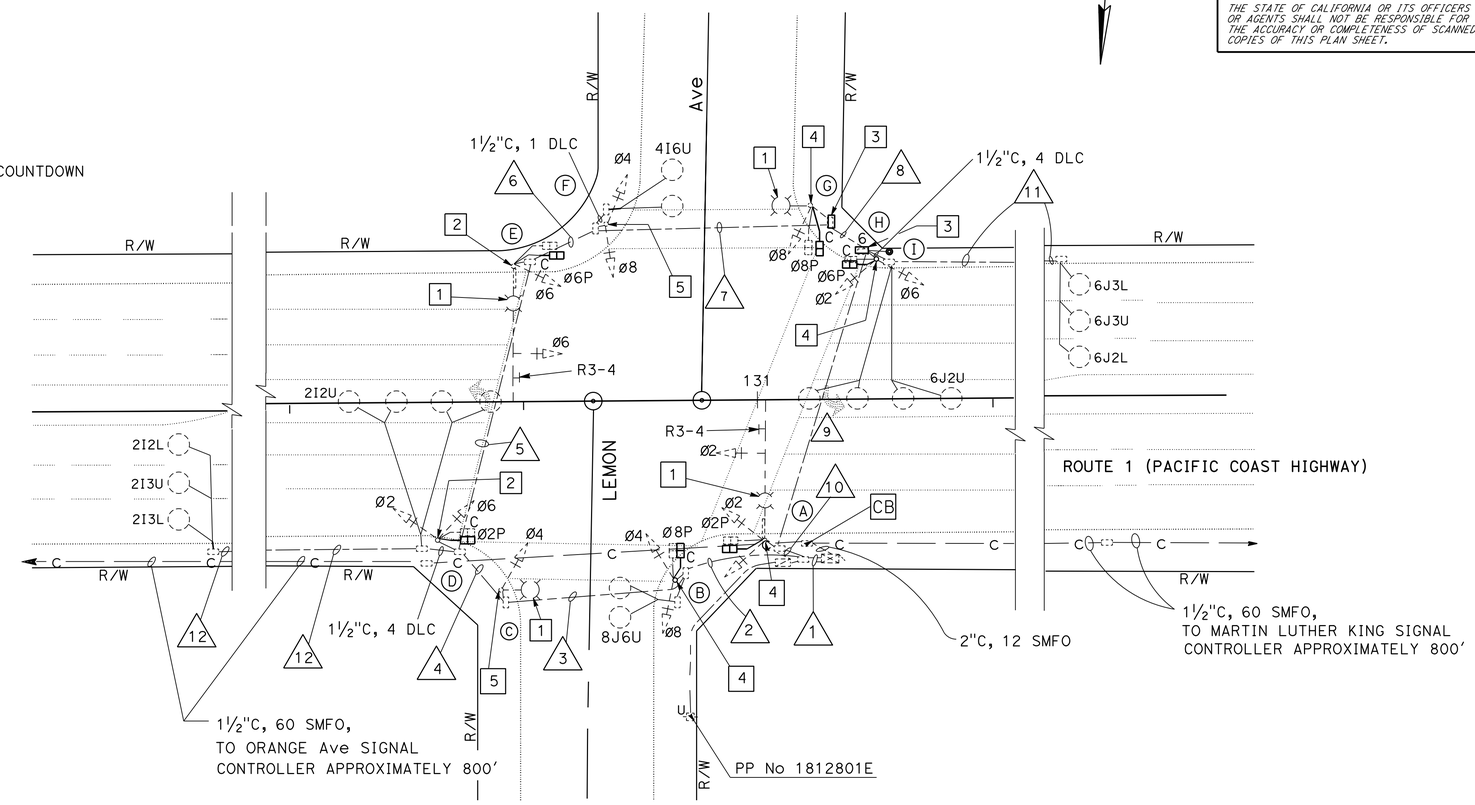

EXISTING PHASE DIAGRAM

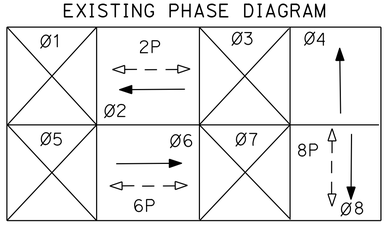

EXISTING POLE AND EQUIPMENT SCHEDULE

No.	STANDARD TYPE	STANDARD SMA	STANDARD LMA	Veh Sig Mtg MAST ARM	Veh Sig Mtg POLE	Ped SIGNAL Mtg	APS Ø	APS ARROW	LED LUMINAIRE	REFLECTORIZED SNS
A	26A-4-161	40'	15'	1 MAS	SV-1-T	SP-1-T	8 (N)	→	235 W (N)	LEMON AVENUE
B	1-A	-	-	-	TV-2-T	SP-1-T	2 (N)	→	-	-
C	15TS	-	12'	-	SV-1-T	SP-1-T	2 (N)	←	235 W (N)	-
D	1-A	-	-	-	TV-2-T	SP-1-T	-	-	-	-
E	26A-4-161	40'	15'	1 MAS	SV-1-T	SP-1-T	-	-	235 W (N)	LEMON AVENUE
F	1-A	-	-	-	TV-2-T	SP-1-T	6 (N)	→		-
G	15TS	-	12'	-	SV-1-T	SP-1-T	6 (N)	←	235 W (N)	-
H	1-A	-	-	-	TV-2-T	SP-1-T	-	-	-	-
I	PBA POST (N)	-	-	-	-	-	8 (N)	←	-	-

(N) NEW

EXISTING CONDUCTOR AND COUNDUIT SCHEDULE

AWG OR CABLE	CONDUCTOR RUN	1	2	3	4	5	6	7	8	9	10	11	12
DLC	Ø2	4	4	4	4								3
	Ø4	1						1	1	1	1		
	Ø6	4								4	4	3	
	Ø8	1	1										
	TOTAL DLC	10	5	4	4			1	1	5	5	3	3
#6	SIGNAL SERVICE	2											
#10	LUMINAIRES		2	2	2	2			2	2	2		
28 CONDUCTOR CABLE		2	2	2	2	2	2	2	2	2	2		
CONDUIT SIZE		2 3"	2 3"	3"	3"	3"	3"	3"	3"	3"	3"	2"	2"

APPROVED FOR ELECTRICAL WORK ONLY

MODIFYING EXISTING ELECTRICAL SYSTEM

SCALE 1"=20'

E-12

REVISED BY	DATE REVISED

CALCULATED-DESIGNED BY	CHECKED BY
KENNY NGUYEN	FATEMEH ANSARI

FUNCTIONAL SUPERVISOR: FATEMEH ANSARI

STATE OF CALIFORNIA - DEPARTMENT OF TRANSPORTATION
Caltrans® TRAFFIC DESIGN

LAST REVISION 00-00-00 | DATE PLOTTED => 07-SEP-2016 | TIME PLOTTED => 12:28

Dist	COUNTY	ROUTE	POST MILES TOTAL PROJECT	SHEET No.	TOTAL SHEETS
07	LA	1	2.4/7.2	148	200

Kenny Nguyen 6/28/16
REGISTERED ELECTRICAL ENGINEER DATE

6-30-16
PLANS APPROVAL DATE

REGISTERED PROFESSIONAL ENGINEER KENNY NGUYEN No. E17759 Exp. 6/30/18 ELECTRICAL STATE OF CALIFORNIA

THE STATE OF CALIFORNIA OR ITS OFFICERS OR AGENTS SHALL NOT BE RESPONSIBLE FOR THE ACCURACY OR COMPLETENESS OF SCANNED COPIES OF THIS PLAN SHEET.

NOTES: (FOR SHEETS E-13, E-14)

1. FOR ACCURATE RIGHT OF WAY DATA, CONTACT RIGHT OF WAY ENGINEERING AT THE DISTRICT OFFICE.
2. FOR CURB RAMP INFORMATION AT THIS LOCATION, SEE CONSTRUCTION DETAILS (CURB RAMPS).
3. SEE CONDUIT AND CONDUCTOR SCHEDULE, POLE AND EQUIPMENT SCHEDULE SHEET.

LEGEND: (THIS SHEET)

1 RC HPS LUMINAIRE. INSTALL 235 W LED Lum

2 RC PEDESTRIAN SIGNAL HEAD AND PBA. INSTALL APS AND LED COUNTDOWN Ped SIGNAL FACE MODULES IN NEW HOUSING

3 RC PULL BOX AND INSTALL NEW PULL BOX AT THE SAME LOCATION

EXISTING PHASE DIAGRAM

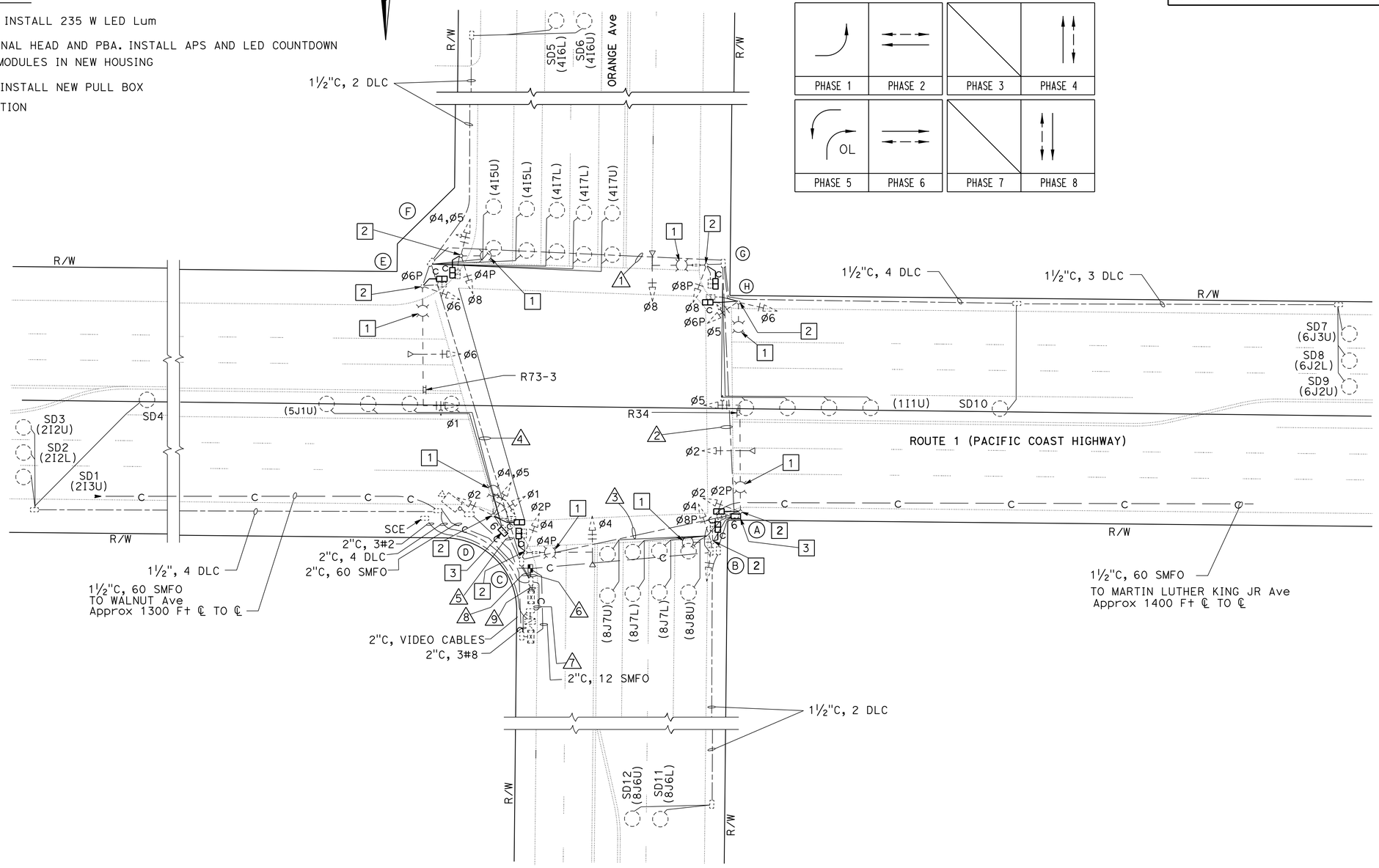

MODIFYING EXISTING ELECTRICAL SYSTEM

SCALE 1"=20'

APPROVED FOR ELECTRICAL WORK ONLY

E-13

REVISED BY	DATE REVISED
KENNY NGUYEN	FATEMEH ANSARI
CALCULATED-DESIGNED BY	CHECKED BY
FUNCTIONAL SUPERVISOR	FATEMEH ANSARI

STATE OF CALIFORNIA - DEPARTMENT OF TRANSPORTATION
Caltrans® **TRAFFIC DESIGN**

LAST REVISION 00-00-00 | DATE PLOTTED => 07-SEP-2016 | TIME PLOTTED => 12:28

Dist	COUNTY	ROUTE	POST MILES TOTAL PROJECT	SHEET No.	TOTAL SHEETS
07	LA	1	2.4/7.2	149	200

Kenny Nguyen 6/28/16
REGISTERED ELECTRICAL ENGINEER DATE

6-30-16
PLANS APPROVAL DATE

REGISTERED PROFESSIONAL ENGINEER KENNY NGUYEN No. E17759 Exp. 06-30-18 ELECTRICAL STATE OF CALIFORNIA

THE STATE OF CALIFORNIA OR ITS OFFICERS OR AGENTS SHALL NOT BE RESPONSIBLE FOR THE ACCURACY OR COMPLETENESS OF SCANNED COPIES OF THIS PLAN SHEET.

EXISTING CONDUIT AND CONDUCTOR SCHEDULE

AWG OR CABLE	CONDUCTOR RUN	1	2	3	4	5	6	7	8	9
#28 CSC	SIGNAL	2	2	2	2	2	-	-	2	2
	TOTAL	2	2	2	2	2	-	-	2	2
#8	LUMINAIRES	2	2	2	2	2	-	-	2	2
#6	SERVICE	-	-	-	-	-	-	2	-	2
#8	GROUND	1	1	1	1	1	1	1	1	1
DLC	Ø1 DETECTOR	-	1	1	-	-	-	-	-	1
	Ø2 DETECTOR	-	-	-	-	-	-	-	-	4
	Ø4 DETECTOR	-	-	-	5	5	-	-	5	5
	Ø5 DETECTOR	-	-	-	-	1	-	-	-	1
	Ø6 DETECTOR	-	4	4	-	-	-	-	-	4
	Ø8 DETECTOR	-	-	5	-	-	-	-	-	5
	TOTAL	-	5	10	5	7	-	-	5	17
#20	EVUC	3	3	3	3	6	-	-	6	12
12SMFO	Comm	-	-	-	-	-	-	-	-	1
CONDUIT SIZE		3"	3"	3"	3"	2-3"	2"	2"	2-3"	2-3" 1-2"

EXISTING POLE AND EQUIPMENT SCHEDULE

No.	STANDARD			Veh Sig Mtg		Ped SIGNAL	APS		LED LUMINAIRE	SNS
	TYPE	SMA	LMA	MAST ARM	POLE	Mtg	Ø	ARROW		
A	26-4-129	40'	12'	1 MAT 1 MAS	SV-1-T	SP-1-T	8(N)	→	235 W (N)	ORANGE AVENUE
B	15TS	-	12'	-	SV-2-TA	SP-1-T	2(N)	→	235 W (N)	-
C	19-4-129	25'	12'	1 MAS	SV-1-T	SP-1-T	2(N)	←	235 W (N)	PACIFIC COAST HIGHWAY
D	15TS	-	12'	-	TV-3-TA	SP-1-T	4(N)	→	235 W (N)	-
E	26-4-129	40'	12'	1 MAT 1 MAS	SV-1-T	SP-1-T	4(N)	←	235 W (N)	ORANGE AVENUE
F	15TS	-	12'	-	SV-2-T	SP-1-T	6(N)	→	235 W (N)	-
G	19-4-129	25'	12'	1 MAS	SV-1-T	SP-1-T	6(N)	←	235 W (N)	PACIFIC COAST HIGHWAY
H	15TS	-	12'	-	SV-2-TA	SP-1-T	8(N)	←	235 W (N)	-

(N) NEW

MODIFYING EXISTING ELECTRICAL SYSTEM

E-14

REVISED BY | DATE REVISED
KENNY NGUYEN | FATEMEH ANSARI
CALCULATED-DESIGNED BY | CHECKED BY
FUNCTIONAL SUPERVISOR | FATEMEH ANSARI
STATE OF CALIFORNIA - DEPARTMENT OF TRANSPORTATION
Caltrans® TRAFFIC DESIGN

LAST REVISION 00-00-00 | DATE PLOTTED => 07-SEP-2016 | TIME PLOTTED => 12:28

Dist	COUNTY	ROUTE	POST MILES TOTAL PROJECT	SHEET No.	TOTAL SHEETS
07	LA	1	2.44/7.22	150	200

Kenny Nguyen 6/28/16
REGISTERED ELECTRICAL ENGINEER DATE

6-30-16
PLANS APPROVAL DATE

REGISTERED PROFESSIONAL ENGINEER KENNY NGUYEN No. E17759 Exp. 06-30-18 ELECTRICAL STATE OF CALIFORNIA

THE STATE OF CALIFORNIA OR ITS OFFICERS OR AGENTS SHALL NOT BE RESPONSIBLE FOR THE ACCURACY OR COMPLETENESS OF SCANNED COPIES OF THIS PLAN SHEET.

NOTE: (THIS SHEET)

1. FOR ACCURATE RIGHT OF WAY DATA, CONTACT RIGHT OF WAY ENGINEERING AT THE DISTRICT OFFICE.

LEGEND: (THIS SHEET)

1 RC PBA.

EXISTING CONDUIT AND CONDUCTOR SCHEDULE

AWG OR CABLE	CONDUCTOR RUN	1	2	3	4	5	6	7	8	9
#8	LUMINAIRES	1	1	1	2	2	3	-	1	1
DLC	Ø1 DETECTOR	1	1	1	1	1	1	1	-	-
	Ø2 DETECTOR	-	-	-	-	6	6	6	-	-
	Ø3 DETECTOR	-	-	-	-	-	1	1	1	-
	Ø4 DETECTOR	-	-	4	4	4	4	4	-	-
	Ø5 DETECTOR	-	-	-	-	1	1	1	-	-
	Ø6 DETECTOR	7	7	7	7	7	7	7	-	-
	Ø7 DETECTOR	-	-	1	1	1	1	1	-	-
	Ø8 DETECTOR	-	-	-	-	-	6	6	6	-
28CSC		2	2	2	2	2	4	4	2	-
12SMFO		-	-	-	-	-	-	1	-	-
CCTV		-	-	-	-	1	1	-	-	-
PEC		-	-	-	-	-	1	1	-	-
EVC		-	1	1	2	2	4	4	1	1
CONDUIT SIZE		3"	4"	4"	4"	4"	2-4"	2-4"	4"	2"

EXISTING PHASE DIAGRAM

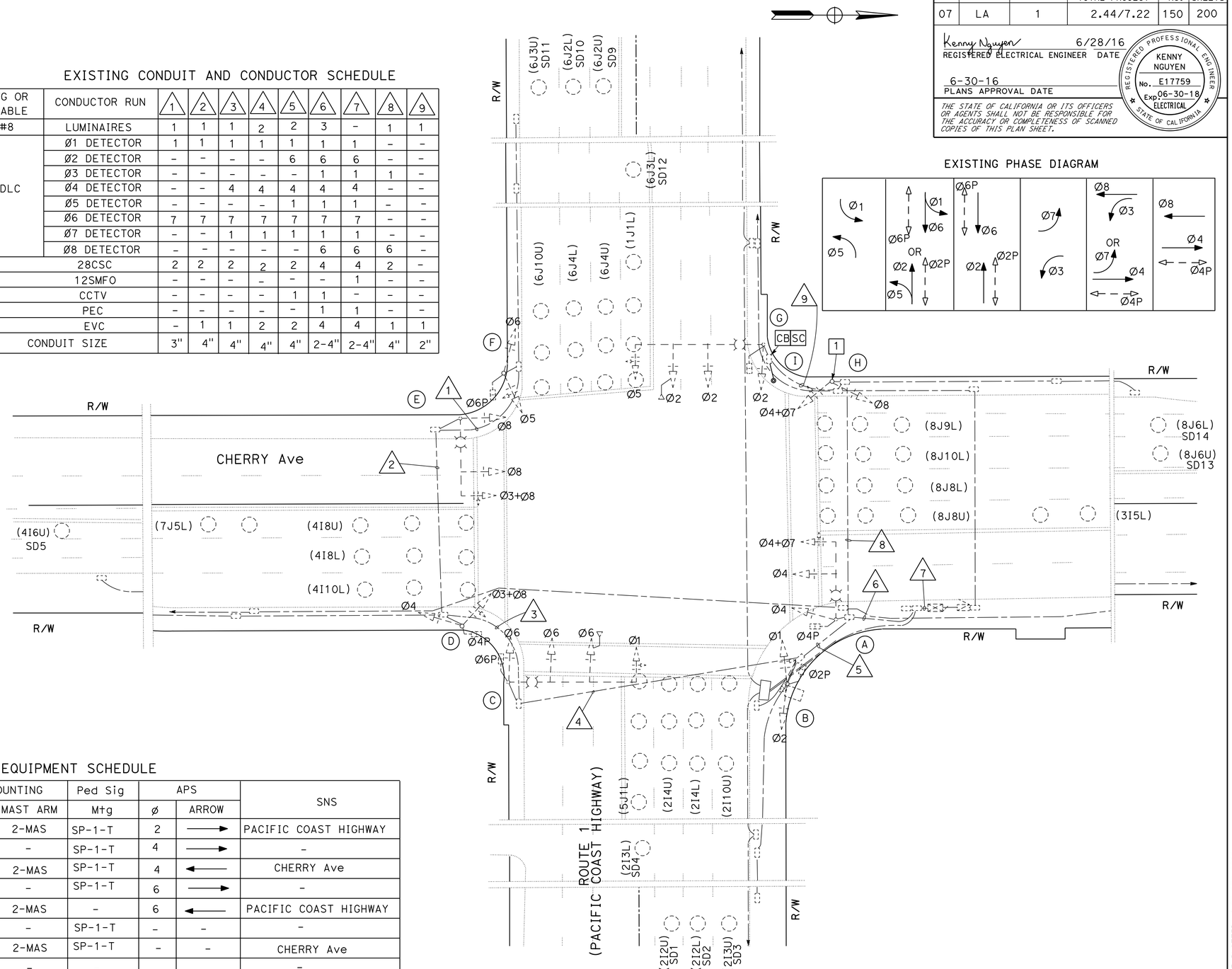

EXISTING POLE AND EQUIPMENT SCHEDULE

	STANDARD			LUMINAIRE	SIGNAL MOUNTING		Ped Sig	APS		SNS
No.	TYPE	SMA	LMA	LED	POLE	MAST ARM	Mtg	ø	ARROW	
A	19-4-100	30'	15'	235 W	SV-1-T	2-MAS	SP-1-T	2	→	PACIFIC COAST HIGHWAY
B	CCTV-45	-	-	-	TV-1-T	-	SP-1-T	4	→	-
C	29-5-100	45'	15'	235 W	SV-1-T	2-MAS	SP-1-T	4	←	CHERRY Ave
D	1-A	-	-	-	TV-1-T	-	SP-1-T	6	→	-
E	19-4-100	30'	15'	235 W	SV-1-T	2-MAS	-	6	←	PACIFIC COAST HIGHWAY
F	1-A	-	-	-	TV-1-T	-	SP-1-T	-	-	-
G	29-5-100	45'	15'	235 W	SV-1-T	2-MAS	SP-1-T	-	-	CHERRY Ave
H	1-A	-	-	-	TV-1-T	-	-			-
I	PBA POST (N)	-	-	-	-	-	-	2	→	-

(N) NEW

APPROVED FOR ELECTRICAL WORK ONLY

MODIFYING EXISTING ELECTRICAL SYSTEM

SCALE 1"=20'

E-15

STATE OF CALIFORNIA - DEPARTMENT OF TRANSPORTATION
Caltrans® TRAFFIC DESIGN

FUNCTIONAL SUPERVISOR: FATEMEH ANSARI
CALCULATED-DESIGNED BY: KENNY NGUYEN
CHECKED BY: FATEMEH ANSARI
REVISED BY / DATE REVISED

LAST REVISION 00-00-00
DATE PLOTTED => 07-SEP-2016
TIME PLOTTED => 12:28

Dist	COUNTY	ROUTE	POST MILES TOTAL PROJECT	SHEET No.	TOTAL SHEETS
07	LA	1	2.4/7.2	151	200

Kenny Nguyen 6/28/16
REGISTERED ELECTRICAL ENGINEER DATE

6-30-16
PLANS APPROVAL DATE

REGISTERED PROFESSIONAL ENGINEER KENNY NGUYEN No. E17759 Exp. 06-30-18 ELECTRICAL STATE OF CALIFORNIA

THE STATE OF CALIFORNIA OR ITS OFFICERS OR AGENTS SHALL NOT BE RESPONSIBLE FOR THE ACCURACY OR COMPLETENESS OF SCANNED COPIES OF THIS PLAN SHEET.

NOTES: (THIS SHEET)

1. FOR ACCURATE RIGHT OF WAY DATA, CONTACT RIGHT OF WAY ENGINEERING AT THE DISTRICT OFFICE.
2. FOR CURB RAMP INFORMATION AT THIS LOCATION, SEE CONSTRUCTION DETAILS (CURB RAMPS).

LEGEND: (THIS SHEET)

1 RC HPS LUMINAIRE. INSTALL 165 W LED Lum

2 RC PEDESTRIAN SIGNAL HEAD AND PBA. INSTALL LED COUNTDOWN Ped SIGNAL FACE MODULES IN NEW HOUSING

3 RC EXISTING PULL BOX AND INSTALL NEW PULL BOX AT THE SAME LOCATION.

4 RC PEDESTRIAN SIGNAL HEAD AND PBA. INSTALL APS AND LED COUNTDOWN Ped SIGNAL FACE MODULES IN NEW HOUSING

5 RC EXISTING TYPE 1-A TRAFFIC SIGNAL

EXISTING PHASE DIAGRAM

Ø1	Ø2	Ø3	Ø4
Ø5	Ø6	Ø7	Ø8

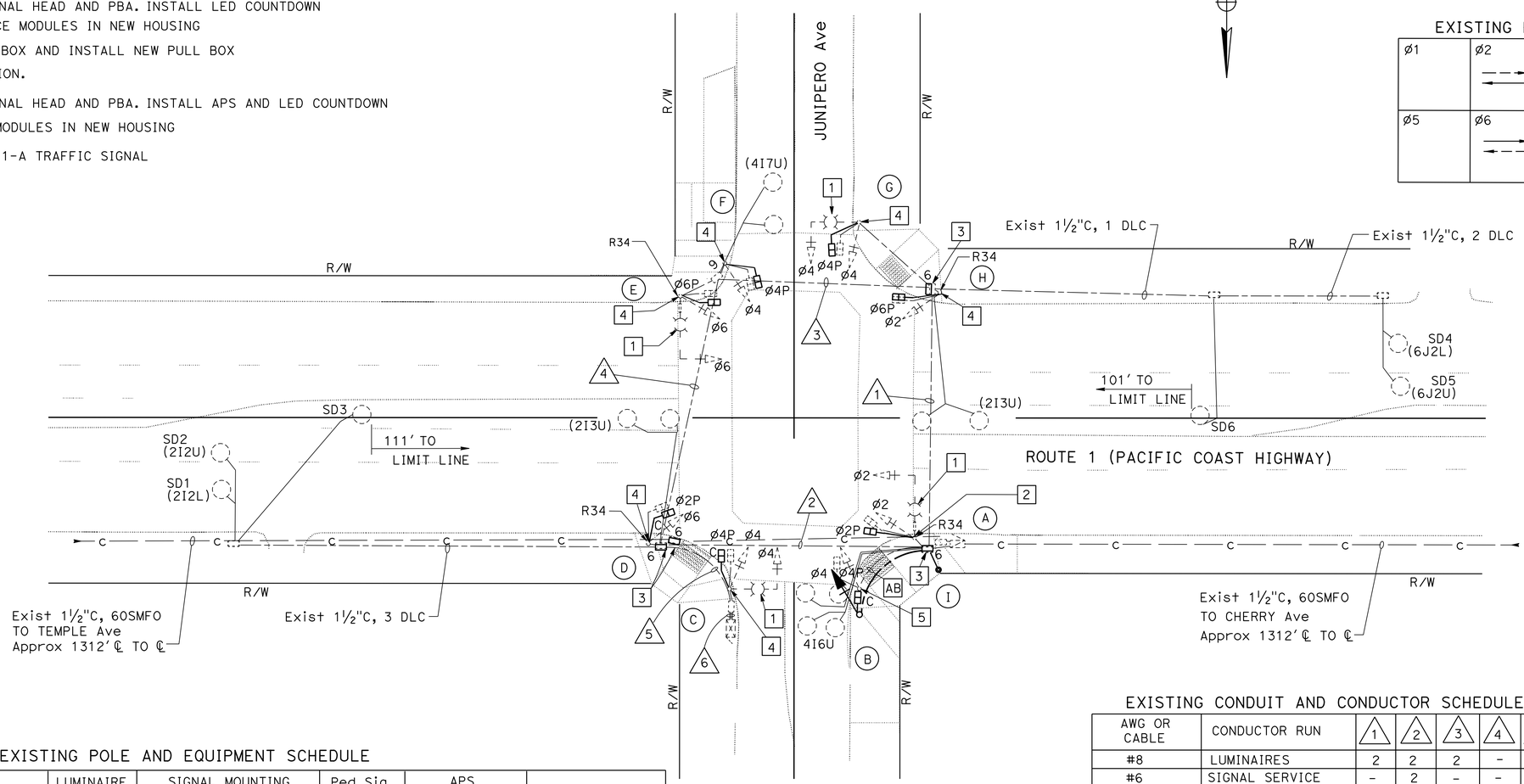

EXISTING POLE AND EQUIPMENT SCHEDULE

STANDARD				LUMINAIRE	SIGNAL MOUNTING		Ped Sig	APS		SNS
No.	TYPE	SMA	LMA	LED	POLE	MAST ARM	Mtg	Ø	ARROW	
A	17-2-113	25'	12'	165 W (N)	SV-1-T	1-MAS	SP-1-T	4(N)	→	JUNIPERO Ave
B	1-A (N)	-	-	-	TV-1-T(N)	-	SP-1-T(N)	2(N)	→	
C	17-2-113	15'	12'	165 W (N)	SV-1-T	1-MAS	SP-1-T	2(N)	←	
D	1-A	-	-	-	TV-1-T	-	SP-1-T	4(N)	→	
E	17-2-113	25'	12'	165 W (N)	SV-1-T	1-MAS	SP-1-T	4(N)	←	JUNIPERO Ave
F	1-A	-	-	-	TV-1-T	-	SP-1-T(N)	6(N)	→	
G	17-1-113	15'	12'	165 W (N)	SV-1-T	1-MAS	SP-1-T	6(N)	←	
H	1-A	-	-	-	TV-1-T	-	SP-1-T		←	
I	PBA POST(N)	-	-	-	-	-	-	4(N)	→	

(N) NEW

EXISTING CONDUIT AND CONDUCTOR SCHEDULE

AWG OR CABLE	CONDUCTOR RUN	1	2	3	4	5	6
#8	LUMINAIRES	2	2	2	-	2	-
#6	SIGNAL SERVICE	-	2	-	-	2	2
#10	GROUND	1	1	1	1	1	1
DLC	Ø2 DETECTOR	-	-	-	-	4	4
	Ø4 DETECTOR	-	1	-	1	2	2
	Ø6 DETECTOR	4	4	-	-	4	4
	TOTAL	4	5	-	1	10	10
28CSC		2	2	2	2	2	2
12SMFO		-	-	-	-	1	1
CONDUIT SIZE		3"	3"	3"	3"	3"	2-3"

MODIFYING EXISTING ELECTRICAL SYSTEM

SCALE 1"=20'

E-16

APPROVED FOR ELECTRICAL WORK ONLY

STATE OF CALIFORNIA - DEPARTMENT OF TRANSPORTATION
Caltrans® TRAFFIC DESIGN

FUNCTIONAL SUPERVISOR: FATEMEH ANSARI
CALCULATED-DESIGNED BY: KENNY NGUYEN
CHECKED BY: FATEMEH ANSARI
REVISED BY / DATE REVISED

LAST REVISION 00-00-00 | DATE PLOTTED => 07-SEP-2016 | TIME PLOTTED => 12:28

Dist	COUNTY	ROUTE	POST MILES TOTAL PROJECT	SHEET No.	TOTAL SHEETS
07	LA	1	2.4/7.4	152	200

Kenny Nguyen 6/28/16
REGISTERED ELECTRICAL ENGINEER DATE

6-30-16
PLANS APPROVAL DATE

REGISTERED PROFESSIONAL ENGINEER KENNY NGUYEN No. E17759 Exp. 6/30/18 ELECTRICAL STATE OF CALIFORNIA

THE STATE OF CALIFORNIA OR ITS OFFICERS OR AGENTS SHALL NOT BE RESPONSIBLE FOR THE ACCURACY OR COMPLETENESS OF SCANNED COPIES OF THIS PLAN SHEET.

NOTES: (THIS SHEET)

1. FOR ACCURATE RIGHT OF WAY DATA, CONTACT RIGHT OF WAY ENGINEERING AT THE DISTRICT OFFICE.
2. FOR CURB RAMP INFORMATION AT THIS LOCATION, SEE CONSTRUCTION DETAILS (CURB RAMPS).

LEGEND: (THIS SHEET)

1 RC HPS LUMINAIRE. INSTALL 235 W Lum

2 RC PEDESTRIAN SIGNAL HEAD AND PBA. INSTALL APS AND Ped COUNTDOWN PEDESTRIAN SIGNAL FACE MODULES IN NEW HOUSING.

3 RC EXISTING PULL BOX AND INSTALL NEW PULL BOX AT THE SAME LOCATION

4 RC Exist TYPE 1-A TRAFFIC SIGNAL POLE

5 RC EXISTING TRAFFIC SIGNAL AND LIGHTING STANDARD AND RL EXISTING SIGNS ON THE POLE TO THE NEW POLE A

EXISTING POLE AND EQUIPMENT SCHEDULE

	STANDARD			LUMINAIRE	SIGNAL MOUNTING		Ped Sig	APS		SNS
No.	TYPE	SMA	LMA	LED	MAST ARM	POLE	Mtg	ø	ARROW	
A	17-2-100 (N)	20′	12′	235 W (N)	1-MAS (N)	SV-1-T (N)	SP-1-T (N)	2(N)	→	PACIFIC COAST Hwy
B	1-A (N)	-	-	-	-	TV-1-T (N)	SP-1-T (N)	4(N)	→	-
C	26-3-100	40′	12′	235 W (N)	2-MAS	SV-1-T	SP-1-T	4(N)	←	TERMINO Ave
D	1-A	-	-	-	-	TV-1-T	SP-1-T	6(N)	→	
E	17-2-70	20′	12′	235 W (N)	1-MAS	SV-1-T	SP-1-T	6(N)	←	PACIFIC COAST Hwy
F	1-A	-	-	-	-	TV-1-T	SP-1-T	8(N)	→	
G	26-3-100	40′	12′	235 W (N)	2-MAS	SV-1-T	SP-1-T	8(N)	←	TERMINO Ave
H	1-A (N)	-	-	-	-	TV-1-T (N)	SP-1-T (N)	2(N)	←	

(N) NEW

EXISTING PHASE DIAGRAM

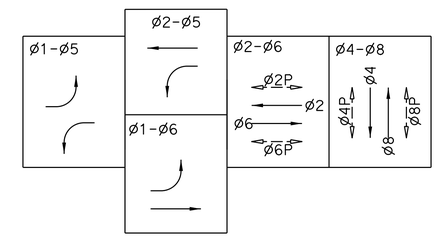

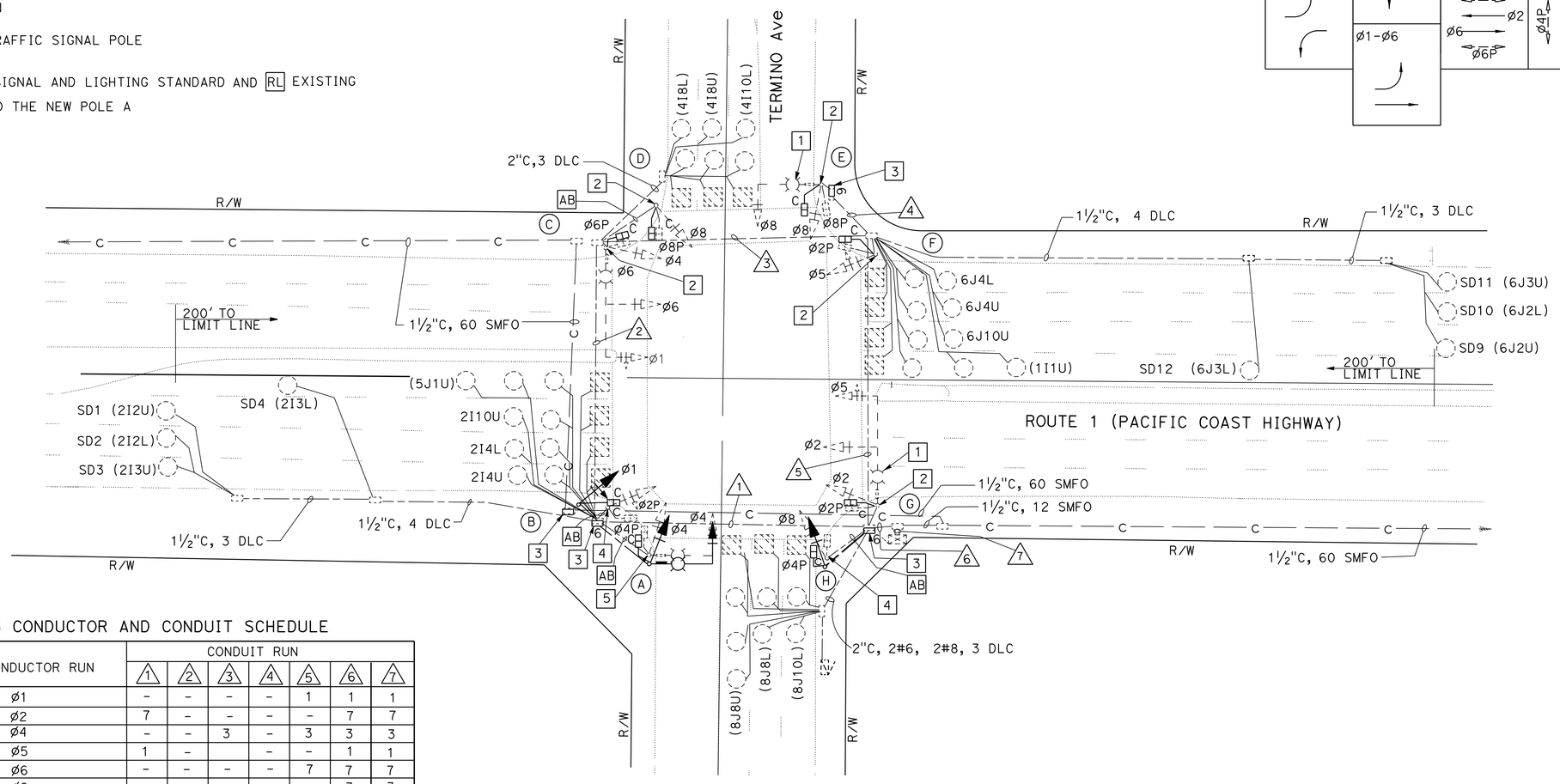

EXISTING CONDUCTOR AND CONDUIT SCHEDULE

AWG OR CABLE	CONDUCTOR RUN	CONDUIT RUN 1	2	3	4	5	6	7
DLC	ø1	-	-	-	-	1	1	1
	ø2	7	-	-	-	-	7	7
	ø4	-	-	3	-	3	3	3
	ø5	1	-		-	-	1	1
	ø6	-	-	-	-	7	7	7
	ø8	-	-	-	-	-	3	3
	TOTAL	8	-	3		11	22	22
#10	LUMINAIRE	2	2	2	-	-	-	-
#6	SERVICE	-	-	-	-	2	2	-
#8	GROUND	1	1	1	1	1	1	1
28CSC		2	2	2	2	2	2	2
12SMFO		-	-	-	-	-	-	1
CONDUIT SIZE		3"	3"	3"	3"	3"	3"	2-3"

MODIFYING EXISTING ELECTRICAL SYSTEM

SCALE: 1" = 20′

APPROVED FOR ELECTRICAL WORK ONLY

E-17

STATE OF CALIFORNIA - DEPARTMENT OF TRANSPORTATION
Caltrans® **TRAFFIC DESIGN**

FUNCTIONAL SUPERVISOR: FATEMEH ANSARI
CALCULATED-DESIGNED BY: KENNY NGUYEN
CHECKED BY: FATEMEH ANSARI
REVISED BY / DATE REVISED

LAST REVISION 11-01-10 | DATE PLOTTED => 07-SEP-2016 | TIME PLOTTED => 12:28

Dist	COUNTY	ROUTE	POST MILES TOTAL PROJECT	SHEET No.	TOTAL SHEETS
07	LA	1	2.4/7.2	153	200

Kenny Nguyen 6/28/16
REGISTERED CIVIL ENGINEER DATE

6-30-16
PLANS APPROVAL DATE

REGISTERED PROFESSIONAL ENGINEER KENNY NGUYEN No. E17759 Exp. 6/30/18 ELECTRICAL STATE OF CALIFORNIA

THE STATE OF CALIFORNIA OR ITS OFFICERS OR AGENTS SHALL NOT BE RESPONSIBLE FOR THE ACCURACY OR COMPLETENESS OF SCANNED COPIES OF THIS PLAN SHEET.

NOTES: (FOR SHEETS E-18, E-19)

1. FOR ACCURATE RIGHT OF WAY DATA, CONTACT RIGHT OF WAY ENGINEERING AT THE DISTRICT OFFICE.
2. FOR CURB RAMP INFORMATION AT THIS LOCATION, SEE CONSTRUCTION DETAILS (CURB RAMPS).
3. SEE CONDUIT AND CONDUCTOR SCHEDULES, POLE AND EQUPMENT SCHEDULES SHEET.
4. SEE CITY LIGHTING PULL BOX ON ELETRICAL DETAILS SHEET.
5. SEE NEW LOOP DETECTOR ON ELECTRICAL DETAILS SHEET.

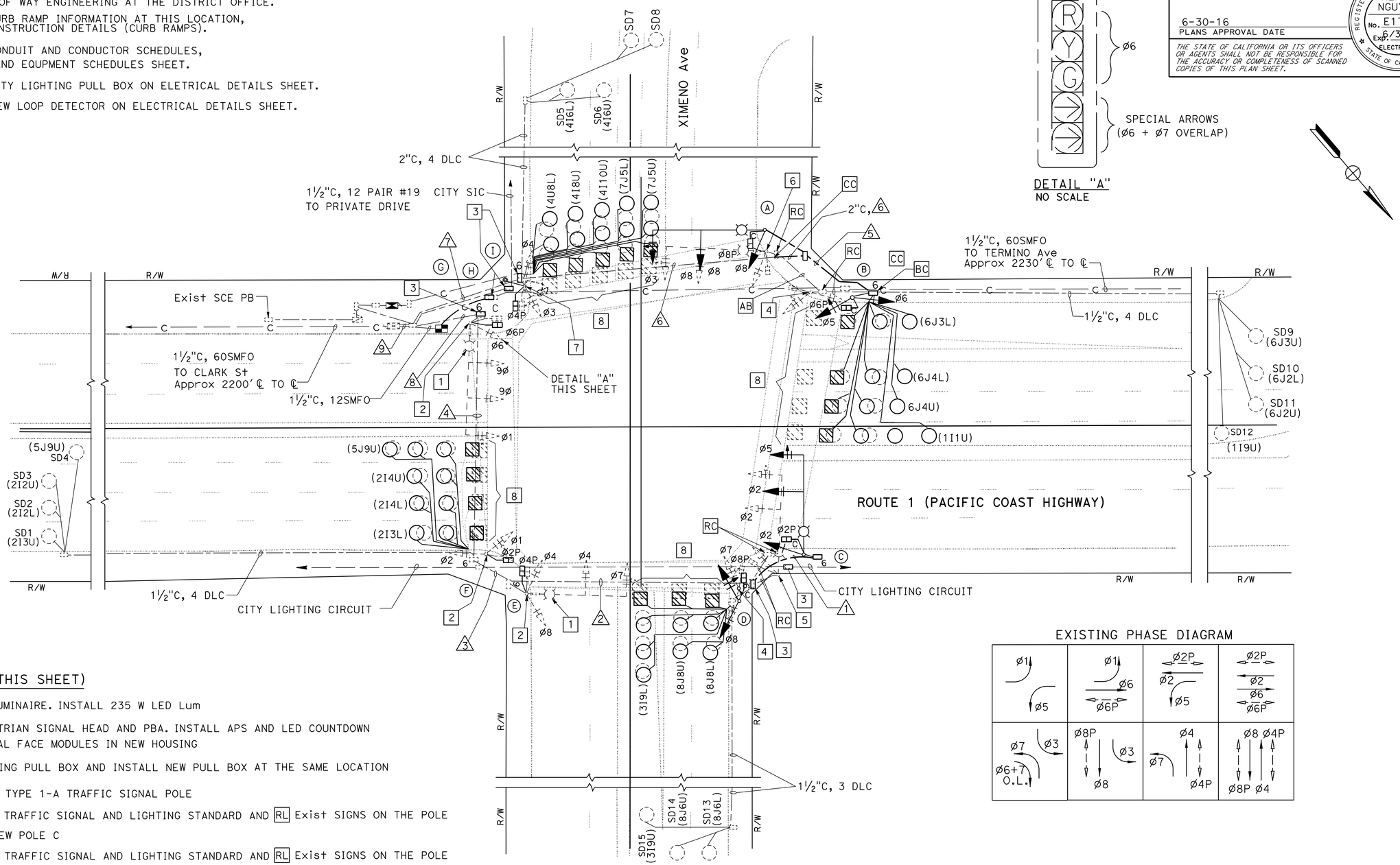

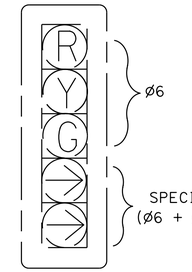

DETAIL "A"
NO SCALE

EXISTING PHASE DIAGRAM

LEGEND: (THIS SHEET)

1 RC HPS LUMINAIRE. INSTALL 235 W LED Lum

2 RC PEDESTRIAN SIGNAL HEAD AND PBA. INSTALL APS AND LED COUNTDOWN Ped SIGNAL FACE MODULES IN NEW HOUSING

3 RC EXISTING PULL BOX AND INSTALL NEW PULL BOX AT THE SAME LOCATION

4 RC Exist TYPE 1-A TRAFFIC SIGNAL POLE

5 RC Exist TRAFFIC SIGNAL AND LIGHTING STANDARD AND RL Exist SIGNS ON THE POLE TO THE NEW POLE C

6 RC Exist TRAFFIC SIGNAL AND LIGHTING STANDARD AND RL Exist SIGNS ON THE POLE TO THE NEW POLE A

7 RC PEDESTRIAN SIGNAL HEAD AND PBA. INSTALL LED COUNTDOWN Ped SIGNAL FACE MODULES IN NEW HOUSING

8 AB Exist INDUCTIVE LOOP DETECTORS AND INSTALL NEW INDUCTIVE LOOP DETECTORS

APPROVED FOR ELECTRICAL WORK ONLY

MODIFYING EXISTING ELECTRICAL SYSTEM

SCALE: 1" = 20'

E-18

REVISED BY	DATE REVISED
KENNY NGUYEN	FATEMEH ANSARI
CALCULATED-DESIGNED BY	CHECKED BY
FUNCTIONAL SUPERVISOR	FATEMEH ANSARI

STATE OF CALIFORNIA - DEPARTMENT OF TRANSPORTATION
Caltrans® TRAFFIC DESIGN

LAST REVISION 00-00-00 | DATE PLOTTED => 07-SEP-2016 | TIME PLOTTED => 12:28

Dist	COUNTY	ROUTE	POST MILES TOTAL PROJECT	SHEET No.	TOTAL SHEETS
07	LA	1	2.4/7.2	154	200

Kenny Nguyen 6/28/16
REGISTERED ELECTRICAL ENGINEER DATE

6-30-16
PLANS APPROVAL DATE

REGISTERED PROFESSIONAL ENGINEER KENNY NGUYEN No. E17759 Exp. 6/30/18 ELECTRICAL STATE OF CALIFORNIA

THE STATE OF CALIFORNIA OR ITS OFFICERS OR AGENTS SHALL NOT BE RESPONSIBLE FOR THE ACCURACY OR COMPLETENESS OF SCANNED COPIES OF THIS PLAN SHEET.

EXISTING CONDUIT AND CONDUCTOR SCHEDULE

AWG OR CABLE	CONDUCTOR RUN	CONDUIT RUN 1	2	3	4	5	6	7	8	9
DLC	ø1	-	-	-	-	2	2	2	-	2
	ø2	-	-	-	6	-	-	-	6	6
	ø3		2	2	2	-	-	-	2	2
	ø4	-	-	-	-	-	-	5	-	5
	ø5	-	-	-	2	-	-	-	2	2
	ø6	-	-	-	-	6	6	6	-	6
	ø7	-	-	-	-	-	-	4	-	4
	ø8	-	-	-	4	-	-	-	4	4
#6	SERVICE	-	-	-	-	-	-	-	-	2
#10	LUMINAIRES	2	2	2	2	-	-	2	2	-
#8	GROUND	1	1	1	1	1	1	1	1	1
28CSC		2(N)	2(N)	2(N)	2(N)	2(N)	2(N)	2(N)	2(N)	2(N)
12SMFO		-	-	-	-	-	-	-	-	1
CONDUIT SIZE		3"	3"	3"	3"	3"	3"	3"	3"	2-3"

(N) NEW

EXISTING POLE AND EQUIPMENT SCHEDULE

	STANDARD			LUMINAIRE	SIGNAL MOUNTING		Ped Sig	APS		SNS
No.	TYPE	SMA	LMA	LED	MAST ARM	POLE	Mtg	ø	ARROW	
A	26-4-100 (N)	45'	12'	235 W (N)	1-MAT (N) 2-MAS (N)	SV-1-T (N)	SP-1-T (N)	6(N)	→	PACIFIC COAST Hwy
B	1-A (N)	-	-	-	-	TV-2-T (N)	SP-1-T (N)	8(N)	→	-
C	26-4-100 (N)	40'	12'	235 W (N)	1-MAT (N) 2-MAS (N)	SV-1-T (N)	SP-1-T (N)	8(N)	←	XIMENO Ave
D	1-A (N)	-	-	-	-	TV-2-T (N)	SP-1-T (N)	2(N)	→	-
E	26-4-70	40'	12'	235 W (N)	1-MAT 1-MAS	SV-1-T	SP-1-T	2(N)	←	PACIFIC COAST Hwy
F	1-A	-	-	-	-	TV-2-T	SP-1-T	4(N)	→	-
G	26-5-70	40'	12'	235 W (N)	1-MAT 2-MAS	SV-1-T	SP-1-T	4(N)	←	
H	PBA POST (N)	-	-	-	-	-	-	6(N)	←	-
I	CCTV45	-	-	-	-	SV-2-T	SP-1-T	-	-	-

(N) NEW

MODIFYING EXISTING ELECTRICAL SYSTEM

E-19

REVISED BY | DATE REVISED

KENNY NGUYEN | ANSARI FATEMEH

CALCULATED-DESIGNED BY | CHECKED BY

FUNCTIONAL SUPERVISOR: ANSARI FATEMEH

STATE OF CALIFORNIA - DEPARTMENT OF TRANSPORTATION

Caltrans® TRAFFIC DESIGN

LAST REVISION 8-24-11 | DATE PLOTTED => 07-SEP-2016 | TIME PLOTTED => 12:28

Dist	COUNTY	ROUTE	POST MILES TOTAL PROJECT	SHEET No.	TOTAL SHEETS
07	LA	1	2.4/7.2	155	200

Kenny Nguyen 6/28/16
REGISTERED ELECTRICAL ENGINEER DATE

6-30-16
PLANS APPROVAL DATE

REGISTERED PROFESSIONAL ENGINEER KENNY NGUYEN No. E17759 Exp. 06/30/18 ELECTRICAL STATE OF CALIFORNIA

THE STATE OF CALIFORNIA OR ITS OFFICERS OR AGENTS SHALL NOT BE RESPONSIBLE FOR THE ACCURACY OR COMPLETENESS OF SCANNED COPIES OF THIS PLAN SHEET.

NOTES: (FOR SHEETS E-20, E-21)

1. FOR ACCURATE RIGHT OF WAY DATA, CONTACT RIGHT OF WAY ENGINEERING AT THE DISTRICT OFFICE.
2. FOR CURB RAMP INFORMATION AT THIS LOCATION, SEE CONSTRUCTION DETAILS (CURB RAMPS).
3. SEE CONDUIT AND CONDUCTOR SCHEDULES, POLE AND EQUPMENT SCHEDULES SHEET.

LEGEND: (THIS SHEET)

1 RC HPS LUMINAIRE. INSTALL 235 W Lum

2 RC PEDESTRIAN SIGNAL HEAD AND PBA. INSTALL APS AND Ped COUNTDOWN PEDESTRIAN SIGNAL FACE MODULES IN NEW HOUSING.

3 RC EXISTING PULL BOX AND INSTALL NEW PULL BOX AT THE SAME LOCATION

4 RC PEDESTRIAN SIGNAL HEAD. INSTALL Ped COUNTDOWN PEDESTRIAN SIGNAL FACE MODULES IN NEW HOUSING

5 RC Exist TYPE 1-A TRAFFIC SIGNAL POLE

6 RC PEDESTRIAN SIGNAL HEAD AND PBA. INSTALL Ped COUNTDOWN PEDESTRIAN SIGNAL FACE MODULES IN NEW HOUSING

EXISTING PHASE DIAGRAM

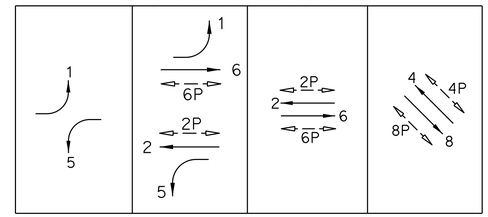

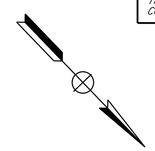

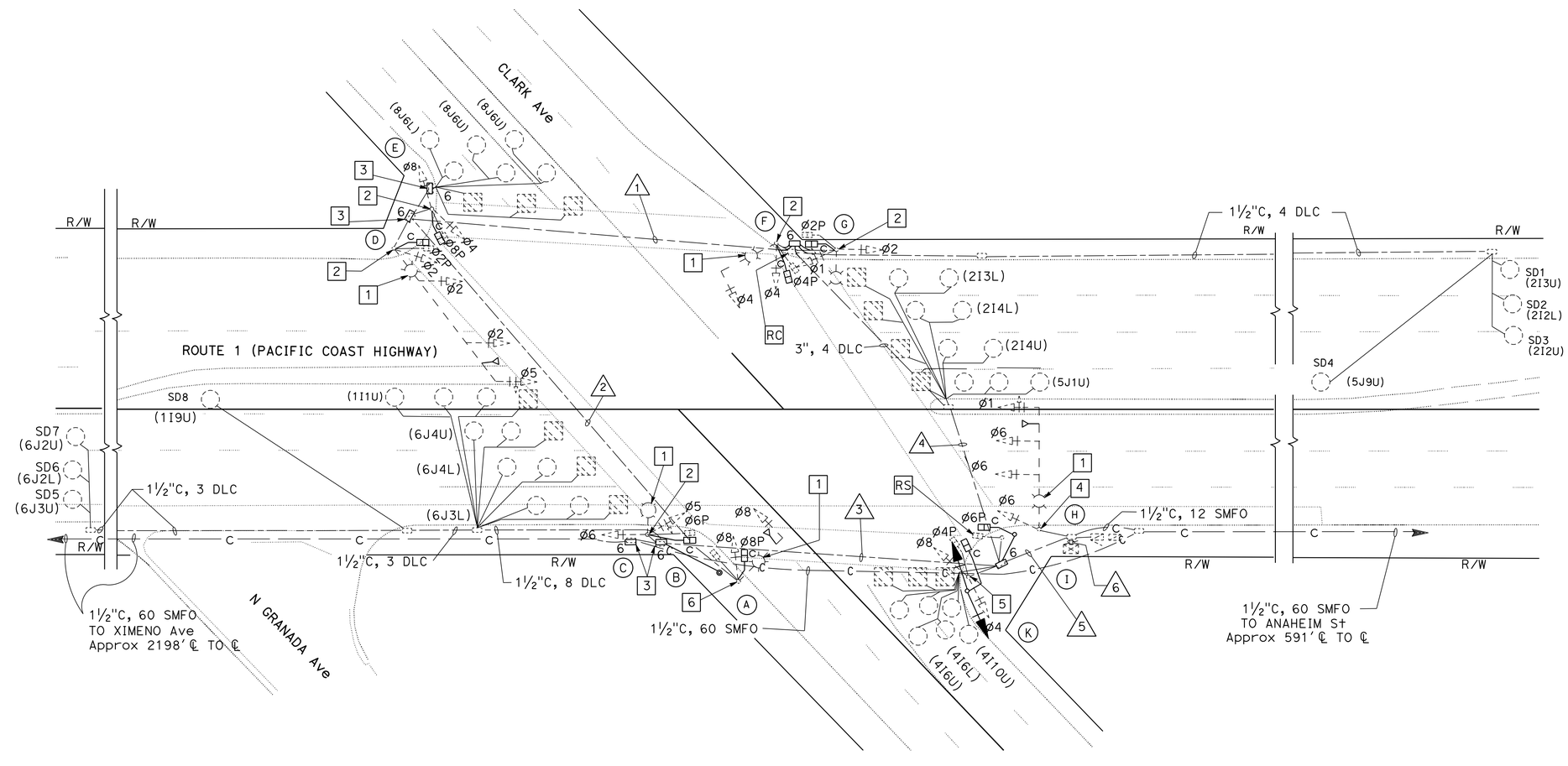

MODIFYING EXISTING ELECTRICAL SYSTEM

SCALE: 1" = 20'

APPROVED FOR ELECTRICAL WORK ONLY

E-20

REVISED BY	DATE REVISED

KENNY NGUYEN	CALCULATED-DESIGNED BY
FATEMEH ANSARI	CHECKED BY
FATEMEH ANSARI	FUNCTIONAL SUPERVISOR

STATE OF CALIFORNIA - DEPARTMENT OF TRANSPORTATION
Caltrans® **TRAFFIC DESIGN**

LAST REVISION 00-00-00 | DATE PLOTTED => 07-SEP-2016 | TIME PLOTTED => 12:28

Dist	COUNTY	ROUTE	POST MILES TOTAL PROJECT	SHEET No.	TOTAL SHEETS
07	LA	1	2.4/7.2	156	200

Kenny Nguyen 6/28/16
REGISTERED ELECTRICAL ENGINEER DATE

6-30-16
PLANS APPROVAL DATE

REGISTERED PROFESSIONAL ENGINEER KENNY NGUYEN No. E17759 Exp. 6/30/18 ELECTRICAL STATE OF CALIFORNIA

THE STATE OF CALIFORNIA OR ITS OFFICERS OR AGENTS SHALL NOT BE RESPONSIBLE FOR THE ACCURACY OR COMPLETENESS OF SCANNED COPIES OF THIS PLAN SHEET.

EXISTING CONDUCTOR AND CONDUIT SCHEDULE

AWG OR CABLE	CONDUCTOR RUN	CONDUIT RUN					
		1	2	3	4	5	6
DLC	ø1	-	-	2	2	2	2
	ø2	-		-	6	6	6
	ø4	-	-	-	-	3	3
	ø5	-	-	2	-	2	2
	ø6	-	-	-	6	6	6
	ø8	-	3	3	-	-	3
	TOTAL	-	3	7	14	19	22
#6	SIGNAL SERVICE	-	-	-	-	-	2
#10	LUMINAIRE	2	2	2	-	2	-
#8	GROUND	1	1	1	1	1	1
#20	EVUC	-	3	6	-	6	9
12SMFO		-	-	-	-	-	1
28CSC		2	2	2	-	2	2
CONDUIT SIZE		3"	3"	3"	3"	3"	2-3"

EXISTING POLE AND EQUIPMENT SCHEDULE

STANDARD				LUMINAIRE	SIGNAL MOUNTING		Ped Sig	APS		SNS
No.	TYPE	SMA	LMA	LED	MAST ARM	POLE	Mtg	ø	ARROW	
A	19-1-70	30'	12'	235 W (N)	1-MAS	SV-1-T	SP-1-T	-	-	-
B	PBA POST (N)	-	-	-	-	-	-	6(N)	→	-
C	15TS	-	12'	235 W (N)	-	SV-2-TA	SP-1-T	8(N)	←	-
D	28-5-70	55'	12'	235 W (N)	1-MAT 2-MAS	SV-1-TA	SP-1-T	8(N)	→	CLARK Ave
E	1-A	-	-	-	-	TV-2-T	SP-1-T	2(N)	←	-
F	17-1-70	20'	12'	235 W (N)	1-MAS	SV-1-T	SP-1-T	2(N)	→	-
G	15TS	-	12'	235 W (N)		SV-2-TA	SP-1-T	4(N)	←	-
H	28-5-70	55'	12'	235 W (N)	1-MAT 2-MAS	SV-1-TA	-	-	-	CLARK Ave
I	1-A (N)	-	-	-	-	-	TP-1-T (N)	4(N)	→	-
K	1-A (N)	-	-	-	-	TV-2-T (N)	SP-I-T (N)	6(N)	←	-

(N) NEW

MODIFYING EXISTING ELECTRICAL SYSTEM

E-21

STATE OF CALIFORNIA - DEPARTMENT OF TRANSPORTATION
Caltrans® TRAFFIC DESIGN

FUNCTIONAL SUPERVISOR: FATEMEH ANSARI
CALCULATED-DESIGNED BY: KENNY NGUYEN
CHECKED BY: FATEMEH ANSARI
REVISED BY
DATE REVISED

LAST REVISION 8-24-11
DATE PLOTTED => 07-SEP-2016
TIME PLOTTED => 12:28

Dist	COUNTY	ROUTE	POST MILES TOTAL PROJECT	SHEET No.	TOTAL SHEETS
07	LA	1	2.4/7.2	157	200

Kenny Nguyen 6/28/16
REGISTERED ELECTRICAL ENGINEER DATE

6-30-16
PLANS APPROVAL DATE

REGISTERED PROFESSIONAL ENGINEER KENNY NGUYEN No. E17759 Exp. 6/30/18 ELECTRICAL STATE OF CALIFORNIA

THE STATE OF CALIFORNIA OR ITS OFFICERS OR AGENTS SHALL NOT BE RESPONSIBLE FOR THE ACCURACY OR COMPLETENESS OF SCANNED COPIES OF THIS PLAN SHEET.

NOTES: (FOR SHEETS E-22, E-23)

1. FOR ACCURATE RIGHT OF WAY DATA, CONTACT RIGHT OF WAY ENGINEERING AT THE DISTRICT OFFICE.
2. FOR CURB RAMP INFORMATION AT THIS LOCATION, SEE CONSTRUCTION DETAILS (CURB RAMPS).
3. SEE CONDUIT AND CONDUCTOR SCHEDULES, POLE AND EQUPMENT SCHEDULES SHEET.

LEGEND: (THIS SHEET)

1 RC HPS LUMINAIRE. INSTALL 235 W Lum

2 RC PEDESTRIAN SIGNAL HEAD AND PBA. INSTALL APS AND Ped COUNTDOWN PEDESTRIAN SIGNAL FACE MODULES IN NEW HOUSING.

3 RC EXISTING PULL BOX AND INSTALL NEW PULL BOX AT THE SAME LOCATION

4 RC PEDESTRIAN SIGNAL HEAD AND PBA. INSTALL Ped COUNTDOWN PEDESTRIAN

EXISTING PHASE DIAGRAM

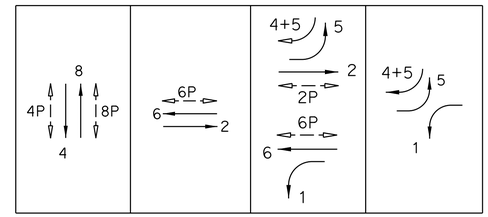

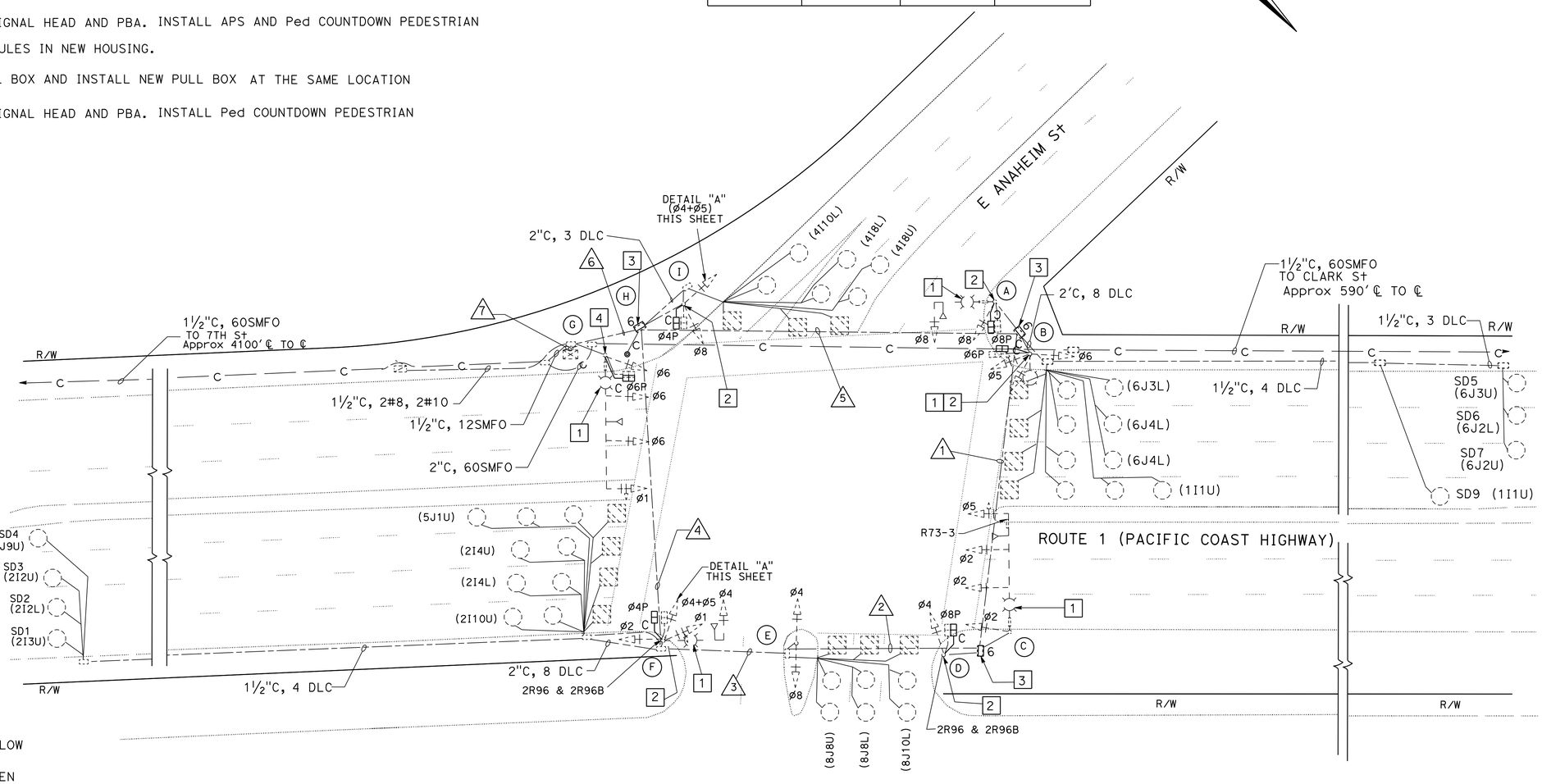

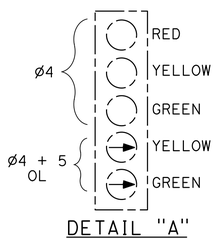

DETAIL "A"
NO SCALE

MODIFYING EXISTING ELECTRICAL SYSTEM

SCALE: 1" = 20'

APPROVED FOR ELECTRICAL WORK ONLY

E-22

REVISED BY	DATE REVISED

CALCULATED-DESIGNED BY	CHECKED BY
KENNY NGUYEN	FATEMEH ANSARI

FUNCTIONAL SUPERVISOR: FATEMEH ANSARI

STATE OF CALIFORNIA - DEPARTMENT OF TRANSPORTATION
Caltrans® TRAFFIC DESIGN

LAST REVISION 00-00-00 | DATE PLOTTED => 07-SEP-2016 | TIME PLOTTED => 12:28

Dist	COUNTY	ROUTE	POST MILES TOTAL PROJECT	SHEET No.	TOTAL SHEETS
07	LA	1	2.4/7.2	158	200

Kenny Nguyen 6/28/16
REGISTERED CIVIL ENGINEER DATE

6-30-16
PLANS APPROVAL DATE

REGISTERED PROFESSIONAL ENGINEER KENNY NGUYEN No. E17759 Exp. 6/30/18 ELECTRICAL STATE OF CALIFORNIA

THE STATE OF CALIFORNIA OR ITS OFFICERS OR AGENTS SHALL NOT BE RESPONSIBLE FOR THE ACCURACY OR COMPLETENESS OF SCANNED COPIES OF THIS PLAN SHEET.

EXISTING CONDUCTOR AND CONDUIT SCHEDULE

AWG OR CABLE	CONDUCTOR RUN	CONDUIT RUN						
		1	2	3	4	5	6	7
DLC	Ø1	-	-	-	-	2	2	2
	Ø2	-	-	-	6	-	6	6
	Ø4	-	-	-	-	-	3	3
	Ø5	-	-	-	2	-	2	2
	Ø6	-	-	-	-	6	6	6
	Ø8	3	3	-	-	3	3	3
	TOTAL	3	3	-	8	11	22	22
#8	GROUND	1	1	1	1	1	1	1
#10	LUMINAIRE	-	2	2	2	2	2	-
#8	SIGNAL SERVICE	-	-	-	-	-	-	2
#20	EVUC	1	-	-	1	2	3	4
28CSC		2	2	2	2	2	2	2
12SFMO		-	-	-	-	-	-	1
CONDUIT SIZE		3"	3"	3"	3"	3"	2-3"	2-3" 1-2"

EXISTING POLE AND EQUIPMENT SCHEDULE

	STANDARD			LUMINAIRE	SIGNAL MOUNTING		Ped Sig	APS		SNS
No.	TYPE	SMA	LMA	LED	MAST ARM	POLE	Mtg	Ø	ARROW	
A	19-2-70	25'	12'	235 W (N)	1-MAS	SV-1-T	SP-1-T	6(N)	→	-
B	15TS	-	12'	235 W (N)	-	SV-2-TA	SP-1-T	8(N)	→	-
C	26-5-70	45'	12'	235 W (N)	1-MAT 2-MAS	SV-1-T	-	-	-	ANAHEIM St
D	1-A	-	-	-	-	SV-1-T	SP-1-T	8(N)	←	-
E	1-A	-	-	-	-	TV-2-T	-	-	-	-
F	19-2-70	30'	12'	235 W (N)	1-MAS	SV-3-TA	SP-1-T	4(N)	→	-
G	26-5-70	45'	12'	235 W (N)	1-MAT 2-MAS	SV-1-T	SP-1-T	-	-	ANAHEIM St
H	PBA POST (N)	-	-	-	-	-	-	4(N)	←	-
I	1-A	-	-	-	-	TV-2-T	SP-1-T	6(N)	←	-

(N) NEW

MODIFYING EXISTING ELECTRICAL SYSTEM

E-23

STATE OF CALIFORNIA - DEPARTMENT OF TRANSPORTATION
Caltrans® TRAFFIC DESIGN

FUNCTIONAL SUPERVISOR: FATEMEH ANSARI
CALCULATED-DESIGNED BY: KENNY NGUYEN
CHECKED BY: FATEMEH ANSARI
REVISED BY
DATE REVISED

LAST REVISION 00-00-00
DATE PLOTTED => 07-SEP-2016
TIME PLOTTED => 12:28

Dist	COUNTY	ROUTE	POST MILES TOTAL PROJECT	SHEET No.	TOTAL SHEETS
07	LA	1	2.4/7.2	159	200

Kenny Nguyen 6/28/16
REGISTERED ELEC. ENGINEER DATE

6-30-16
PLANS APPROVAL DATE

REGISTERED PROFESSIONAL ENGINEER KENNY NGUYEN No. E17759 Exp. 6/30/18 ELECTRICAL STATE OF CALIFORNIA

THE STATE OF CALIFORNIA OR ITS OFFICERS OR AGENTS SHALL NOT BE RESPONSIBLE FOR THE ACCURACY OR COMPLETENESS OF SCANNED COPIES OF THIS PLAN SHEET.

PULL BOX LOCATION

CURB RAMP No.	DESCRIPTION	DIRECTION	RC Exist PULL BOX	PULL BOX TYPE 5	PULL BOX TYPE 6
14	PACIFIC COAST Hwy AT GRANADA Ave	SB	2	1	1
18	PACIFIC COAST Hwy AT ANAHEIM PLACE	SB	1	1	
19	PACIFIC COAST Hwy AT PARK Ave	SB	1	1	
27	PACIFIC COAST Hwy AT OUTER TRAFFIC CIRCLE	NB	1	1	
34	PACIFIC COAST Hwy AT OUTER TRAFFIC CIRCLE	SB	1	1	
40	PACIFIC COAST Hwy AT RESERVOIR Dr. W.	SB	1	1	
50	PACIFIC COAST Hwy 100′ W. OF CORONADA Ave	SB	1	1	
56	PACIFIC COAST Hwy 100′ W. OF ORIZABA Ave	SB	1	1	
63	PACIFIC COAST Hwy AT MOLINO Ave	SB	1	1	
65	PACIFIC COAST Hwy 120′ W. OF MOLINO Ave	NB	1	1	
77	PACIFIC COAST Hwy 120′ E. OF CHERRY Ave	SB	1	1	
81	PACIFIC COAST Hwy AT GARDENIA Ave	SB	1	1	
84	PACIFIC COAST Hwy AT ROSE Ave	NB	1	1	
88	PACIFIC COAST Hwy AT GAVIOTA Ave	NB	2	2	
89	PACIFIC COAST Hwy AT GAVIOTA Ave	NB	1	1	
90	PACIFIC COAST Hwy AT MAY Ave	NB	2	2	
92	PACIFIC COAST Hwy 120′ E. OF CRRITOS Ave	NB	1	1	
99	PACIFIC COAST Hwy AT MYRTLE Ave	NB	1	1	
100	PACIFIC COAST Hwy AT MYRTLE Ave	NB	2	1	1
103	PACIFIC COAST Hwy AT OLIVE Ave	NB	1	1	
104	PACIFIC COAST Hwy 180′ W OF OLIVE Ave	NB	3	3	
106	PACIFIC COAST Hwy AT LIME Ave	NB	1	1	
111	PACIFIC COAST Hwy AT BROADWAY Ct	NB	1	1	
117	PACIFIC COAST Hwy AT LINDEN Ave	NB	1	1	
118	PACIFIC COAST Hwy AT LINDEN Ave	NB	1	1	
119	PACIFIC COAST Hwy AT N PASADENA Ave	NB	3	3	
120	PACIFIC COAST Hwy AT N PASADENA Ave	NB	1	1	

LEGEND: (THIS SHEET)

1. RC EXISTING PULL BOX AT CURB RAMP AREA. INSTALL NEW PB AT SAME LOCATION.
2. FOR CURB RAMP INFORMATION, SEE CONSTRUCTION DETAILS (CURB RAMP).

PULL BOX LOCATION

CURB RAMP No.	DESCRIPTION	DIRECTION	RC Exist PULL BOX	PULL BOX TYPE 5	PULL BOX TYPE 6
129	PACIFIC COAST Hwy AT PALMER Ct	NB	1	1	
128	PACIFIC COAST Hwy AT PALMER Ct	SB	1	1	
131	PACIFIC COAST Hwy AT LOCUST Ave	NB	2	2	
134	PACIFIC COAST Hwy AT TRIBUNE Ct	NB	1	1	
138	PACIFIC COAST Hwy AT SOLANA Ct	NB	2	2	
139	PACIFIC COAST Hwy AT SOLANA Ct	NB	1	1	
149	PACIFIC COAST Hwy AT CHESTNUT Ave	NB	2	1	1
165	PACIFIC COAST Hwy AT DAISY Ave	SB	1	1	
166	PACIFIC COAST Hwy AT DAISY Ave	NB	1	1	
168	PACIFIC COAST Hwy AT DAISY Ave	NB	1	1	
172	PACIFIC COAST Hwy AT MAINE Ave	NB	1	1	
173	PACIFIC COAST Hwy AT MAINE Ave	NB	1	1	
177	PACIFIC COAST Hwy AT OREGON Ave	NB	1	1	

MODIFYING EXISTING ELECTRICAL SYSTEM

E-24

REVISED BY | DATE REVISED
KENNY NGUYEN | FATEMEH ANSARI
CALCULATED-DESIGNED BY | CHECKED BY
FUNCTIONAL SUPERVISOR | FATEMEH ANSARI
STATE OF CALIFORNIA - DEPARTMENT OF TRANSPORTATION
Caltrans® TRAFFIC DESIGN

LAST REVISION 00-00-00 | DATE PLOTTED => 07-SEP-2016 | TIME PLOTTED => 12:28

Dist	COUNTY	ROUTE	POST MILES TOTAL PROJECT	SHEET No.	TOTAL SHEETS
07	LA	1	2.4/7.2	160	200

Kenny Nguyen 6/28/16
REGISTERED ELEC ENGINEER DATE

6-30-16
PLANS APPROVAL DATE

REGISTERED PROFESSIONAL ENGINEER KENNY NGUYEN No. E17759 Exp. 6/30/18 ELECTRICAL STATE OF CALIFORNIA

THE STATE OF CALIFORNIA OR ITS OFFICERS OR AGENTS SHALL NOT BE RESPONSIBLE FOR THE ACCURACY OR COMPLETENESS OF SCANNED COPIES OF THIS PLAN SHEET.

NOTES: (THIS SHEET)

1. FOR CURB RAMP INFORMATION AT THIS LOCATION, SEE CONSTRUCTION DETAILS (CURB RAMPS).
2. SEE CITY LIGHTING PULL BOX ON ELECTRICAL DETAILS SHEET.

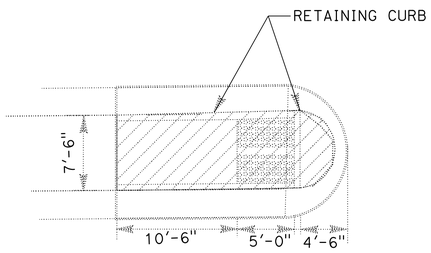

CURB RAMP No. 29 (CASE F)

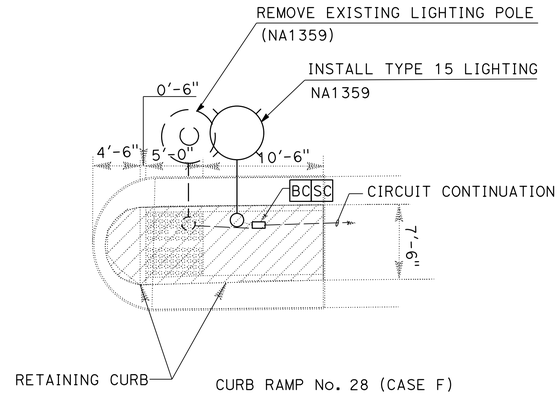

CURB RAMP No. 28 (CASE F)

PACIFIC COAST Hwy

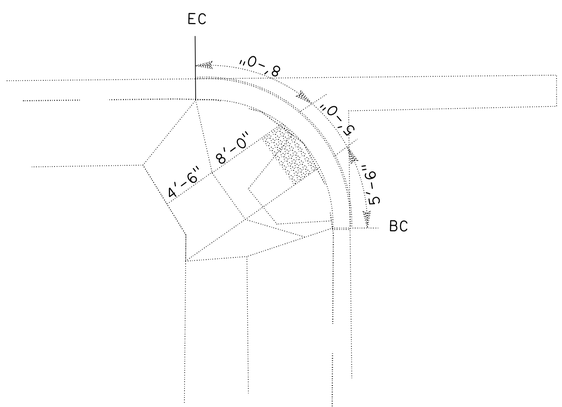

CURB RAMP No. 27 (CASE A)

PARK Ave

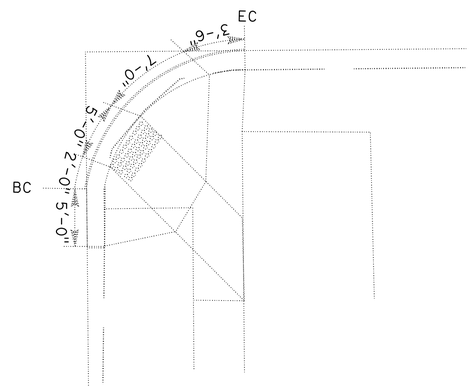

CURB RAMP No. 26 (CASE A)

WIRING DIAGRAM LEGEND: (THIS SHEET)

- ⊘ EXISTING LUMINARIE
- --- EXISTING #8 AWG
- ○ NEW 165 W LED
- ⊗ REMOVE EXISTING LUMINARIE

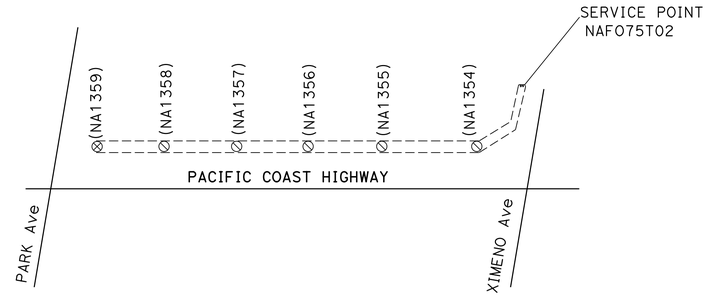

EXISTING WIRING DIAGRAM
NO SCALE

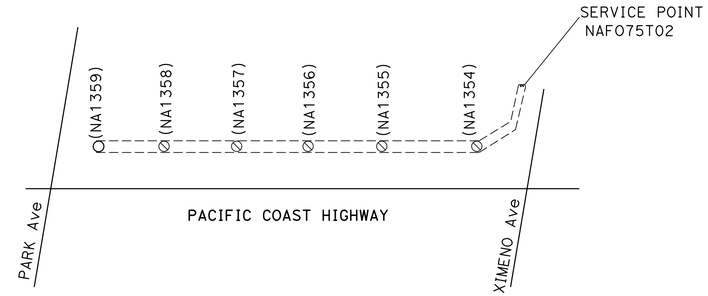

NEW WIRING DIAGRAM
NO SCALE

APPROVED FOR ELECTRICAL WORK ONLY

LIGHTING (CITY STREET)

NO SCALE

E-25

REVISED BY	DATE REVISED
KENNY NGUYEN	FATEMEH ANSARI
CALCULATED-DESIGNED BY	CHECKED BY
FUNCTIONAL SUPERVISOR	FATEMEH ANSARI

STATE OF CALIFORNIA - DEPARTMENT OF TRANSPORTATION
Caltrans® **TRAFFIC DESIGN**

LAST REVISION 00-00-00 | DATE PLOTTED => 07-SEP-2016 | TIME PLOTTED => 12:28

Dist	COUNTY	ROUTE	POST MILES TOTAL PROJECT	SHEET No.	TOTAL SHEETS
07	LA	1	2.4/7.2	161	200

Kenny Nguyen 6/28/16
REGISTERED ELECTRICAL ENGINEER DATE

6-30-16
PLANS APPROVAL DATE

REGISTERED PROFESSIONAL ENGINEER KENNY NGUYEN No. E17759 Exp. 6/30/18 ELECTRICAL STATE OF CALIFORNIA

THE STATE OF CALIFORNIA OR ITS OFFICERS OR AGENTS SHALL NOT BE RESPONSIBLE FOR THE ACCURACY OR COMPLETENESS OF SCANNED COPIES OF THIS PLAN SHEET.

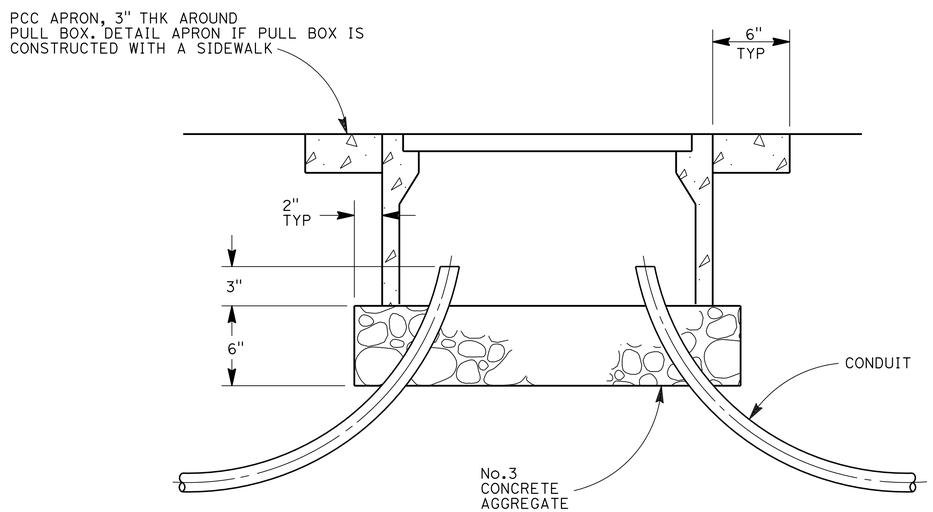

TYPICAL PULL BOX INSTALLATION

PULL BOX No.	OUTSIDE	DIMENSIONS			
		OUTSIDE		COVER	
		A	B	C	D
5	PCC	25"	15"	21¾"	11¾"
6	PCC	34"	22"	29¾"	17¾"

NOTE:

1. PULL BOXES SHALL BE NON-BOLTDOWN TYP UNLESS NOTED.
2. SIZE OF COUPLER AND NEW CONDUIT SHALL BE SAME SIZE AS EXISTING CONDUIT

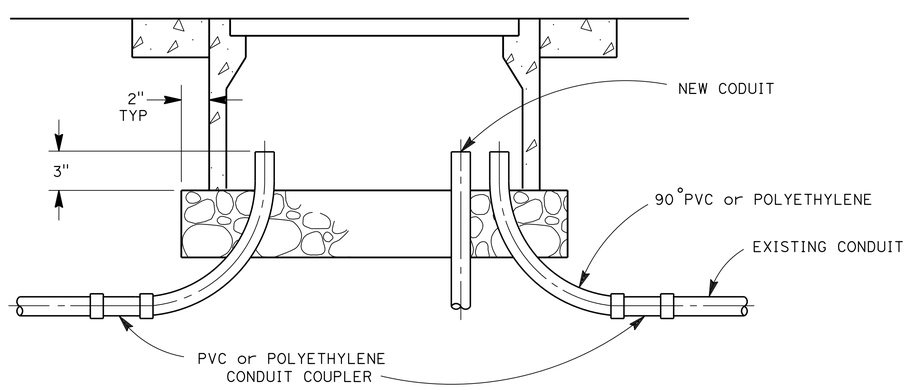

TYPICAL CONDUIT INTERCEPT

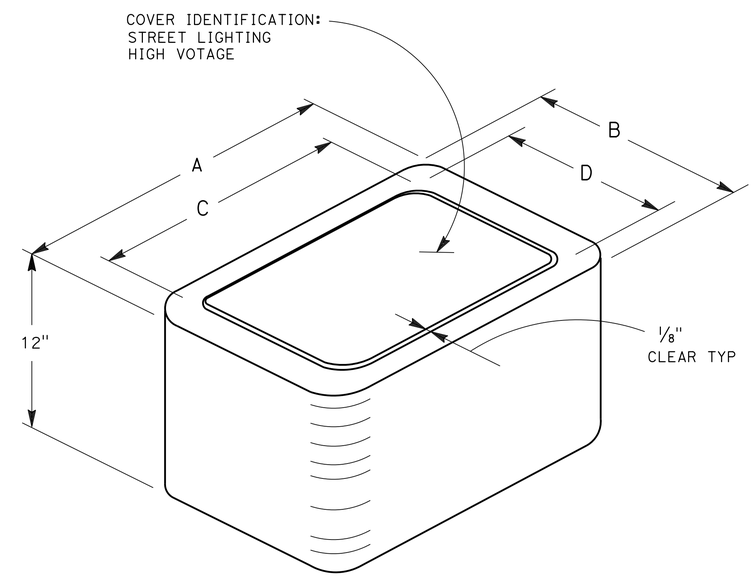

PULL BOX DETAIL

LIGHTING (CITY STREET)
(PULL BOX AND CONDUIT DETAILS)

ELECTRICAL DETAILS
NO SCALE

E-26

STATE OF CALIFORNIA - DEPARTMENT OF TRANSPORTATION
Caltrans® **TRAFFIC DESIGN**

FUNCTIONAL SUPERVISOR: FATEMEH ANSARI
CALCULATED-DESIGNED BY: KENNY NGUYEN
CHECKED BY: FATEMEH ANSARI
REVISED BY
DATE REVISED

LAST REVISION 00-00-00
DATE PLOTTED => 07-SEP-2016
TIME PLOTTED => 12:28

Dist	COUNTY	ROUTE	POST MILES TOTAL PROJECT	SHEET No.	TOTAL SHEETS
07	LA	1	2.4/7.2	162	200

Kenny Nguyen 6/28/16
REGISTERED ELECTRICAL ENGINEER DATE

6-30-16
PLANS APPROVAL DATE

REGISTERED PROFESSIONAL ENGINEER KENNY NGUYEN No. E17759 Exp. 6/30/18 ELECTRICAL STATE OF CALIFORNIA

THE STATE OF CALIFORNIA OR ITS OFFICERS OR AGENTS SHALL NOT BE RESPONSIBLE FOR THE ACCURACY OR COMPLETENESS OF SCANNED COPIES OF THIS PLAN SHEET.

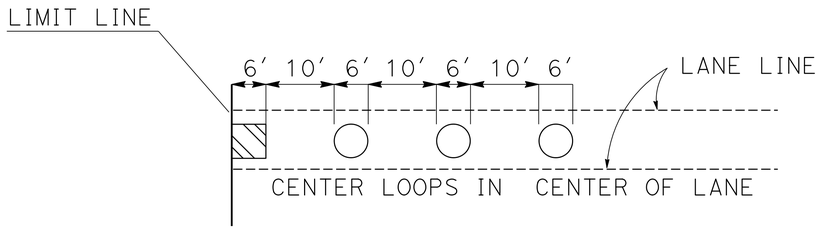

TYPICAL LOOP DETAIL

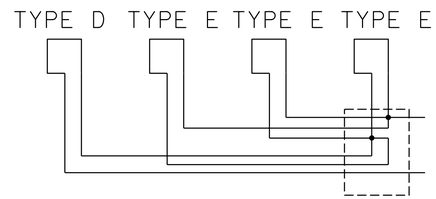

LOOP CONNECTION
DETAIL A

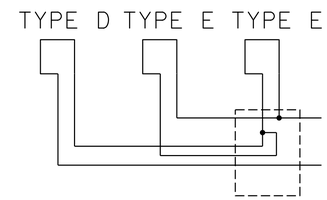

LOOP CONNECTION
DETAIL B

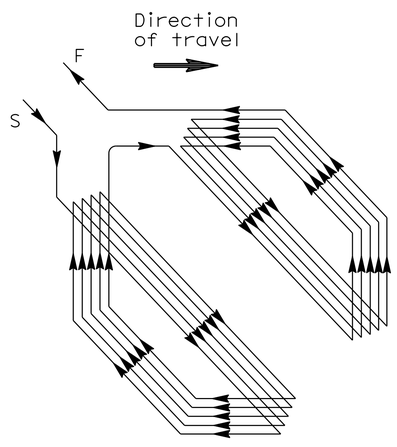

WINDING DETAIL

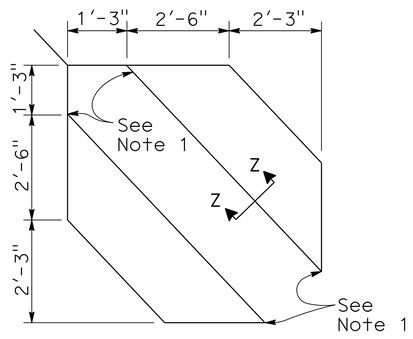

SAWCUT DETAIL

TYPE D LOOP DETECTOR CONFIGURATION

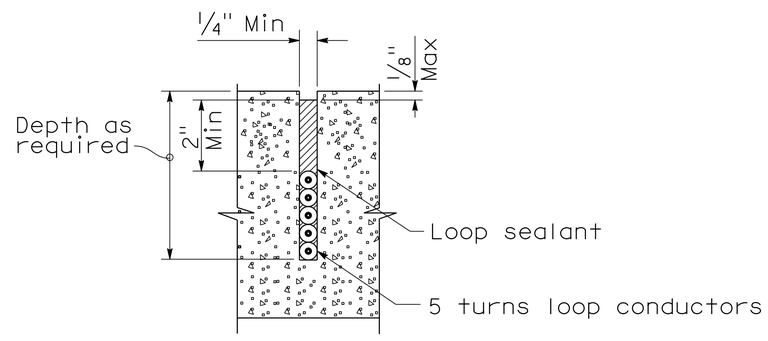

SECTION Z-Z (FOR TYPE D LOOP DETECTOR)

SLOT DETAILS - TYPE 2 LOOP CONDUCTOR

NOTES:

1. Round corners of acute angle sawcuts to prevent damage to conductors.
2. Use section Z-Z instead of A-A in RSP ES-5A for Type D loop detector.
3. Install 5 turns for all Type D loops.

MODIFYING EXISTING ELECTRICAL SYSTEM

ELECTRICAL DETAILS
NO SCALE

E-27

STATE OF CALIFORNIA - DEPARTMENT OF TRANSPORTATION
Caltrans® **TRAFFIC DESIGN**
FUNCTIONAL SUPERVISOR: FATEMEH ANSARI
CALCULATED-DESIGNED BY: KENNY NGUYEN
CHECKED BY: FATEMEH ANSARI
REVISED BY / DATE REVISED

LAST REVISION 00-00-00 | DATE PLOTTED => 07-SEP-2016 | TIME PLOTTED => 12:28

Dist	COUNTY	ROUTE	POST MILES TOTAL PROJECT	SHEET No.	TOTAL SHEETS
07	LA	1	2.4/7.2	163	200

Kenny Nguyen 6/28/16
REGISTERED ELECTRICAL ENGINEER DATE

6-30-16
PLANS APPROVAL DATE

REGISTERED PROFESSIONAL ENGINEER KENNY NGUYEN No. E17759 Exp. 6/30/18 ELECTRICAL STATE OF CALIFORNIA

THE STATE OF CALIFORNIA OR ITS OFFICERS OR AGENTS SHALL NOT BE RESPONSIBLE FOR THE ACCURACY OR COMPLETENESS OF SCANNED COPIES OF THIS PLAN SHEET.

NOTE: (THIS SHEET)

1. ITEMS SHOWN IN TABLES ARE NOT A SEPARATE PAY ITEM, FOR INFORMATION ONLY.

LIGHTING (CITY STREET)

SHEET No.	TYPE 15 STANDARD	CITY PULL BOX #5
	EA	EA
E-26	1	1

MODIFYING EXISTING ELECTRICAL SYSTEM

SHEET No.	CCTV 45 POLE	TYPE 15TS STANDARD	PBA POST	TYPE 1-A STANDARD	TYPE 17-2-100 STANDARD	TYPE 26-4-100 STANDARD	APS	PEDESTRIAN LED COUNTDOWN SIGNAL HEAD	VEHICULAR SIGNAL HEAD	LED LUMINAIRE 165 W	LED LUMINAIRE 235 W	LOOP DETECTOR	PULL BOX #5	PULL BOX #6	#28 CSC	CONDUCTOR 2#8	CONDUCTOR 2#6	CONDUCTOR 1#8 (GROUND)	3"C TYPE 1	2"C TYPE 1
	EA	EA	EA	EA	EA	EA	EA	EA	EA	EA	EA	EA	EA	EA	LF	LF	LF	LF	LF	LF
E-1	1	2	2	1	-	-	8	8	5	4	-	17	4	4	400	600	20	300	250	30
E-3	-	-	-	-	-	-	8	8	-	4	-	-	-	7	-	-	-	-	-	-
E-5	-	-	-	1	-	-	8	8	2	4	-	-	4	1		-	-	-	-	-
E-6	-	-	2	-	-	-	8	8	-	-	7	-	-	-	-	-	-	-	-	-
E-8	-	-	-	3	1	-	8	8	6	4	-	-	3	1	-	-	-	-	-	-
E-10	-	-	3	-	-	-	8	8	-	-	6	-	-	2	-	-	-	-	-	-
E-12	-	-	1	-	-	-	6	6	-	-	4	-	1	1	-	-	-	-	-	-
E-13	-	-	-	-	-	-	8	8	-	-	8	-	2	-	-	-	-	-	-	-
E-15	-	-	1	-	-	-	-	-	-	-	-	-	-	-	-	-	-	-	-	-
E-16	-	-	1	1	-	-	8	8	4	4	-	-	1	3	-	-	-	-	-	-
E-17	-	-	-	2	1	-	8	8	8	-	4	-	1	4	-	-	-	-	-	-
E-18	-	-	1	2	-	2	8	8	10	-	4	51	2	6	400	-	-	-	60	-
E-20	-	-	1	2	-	-	8	8	2	-	6	-	-	6	-	-	-	-		-
E-22	-	-	1	-	-	-	6	6	-	-	5	-	-	3	-	-	-	-	-	-
E-24	-	-	-	-	-	-	-	-	-	-	-	-	48	3	-	-	-	-	-	-

STATE OF CALIFORNIA - DEPARTMENT OF TRANSPORTATION
Caltrans® TRAFFIC DESIGN

FUNCTIONAL SUPERVISOR: FATEMEH ANSARI
CALCULATED-DESIGNED BY: KENNY NGUYEN
CHECKED BY: FATEMEH ANSARI
REVISED BY
DATE REVISED

ELECTRICAL QUANTITIES
E-28

LAST REVISION 00-00-00
DATE PLOTTED => 07-SEP-2016
TIME PLOTTED => 12:28

DIST	COUNTY	ROUTE	POST MILES TOTAL PROJECT	SHEET No	TOTAL SHEETS
07	LA	1	2.4/7.2	164	200

Eliseo Lopez 5-18-16
REGISTERED CIVIL ENGINEER DATE

6-30-16
PLANS APPROVAL DATE

REGISTERED PROFESSIONAL ENGINEER ELISEO LOPEZ No. C72910 Exp. 12/31/16 CIVIL STATE OF CALIFORNIA

The State of California or its officers or agents shall not be responsible for the accuracy or completeness of electronic copies of this plan sheet.

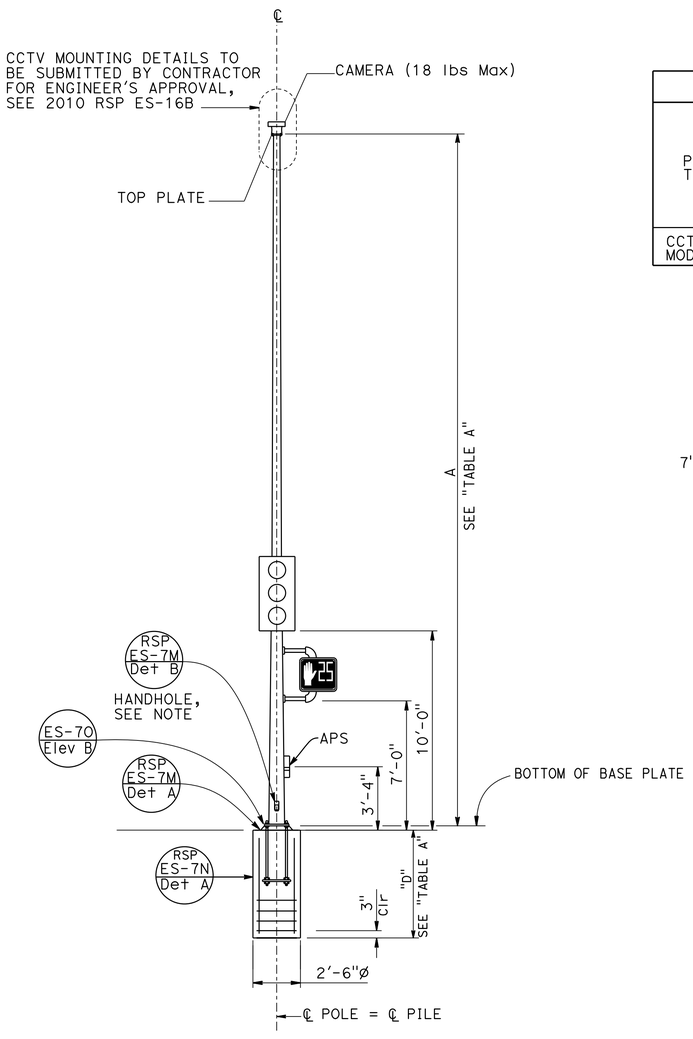

CCTV 45 POLE MODIFIED ELEVATION

See Note 6

TABLE A

POLE TYPE	POLE DATA				BASE PLATE DATA				"D" 2'-6"ø CIDH PILE
	HEIGHT "A"	MIN OD		WALL THICKNESS	"C"	THICKNESS	ANCHOR BOLTS		
		BASE	TOP				SIZE	BC = BOLT CIRCLE	LEVEL GROUND
CCTV 45 MODIFIED	45'-0"	10"	3¾"	0.1793"	1'-3"	1"	1½"ø x 36"	1'-2"	9'-0"

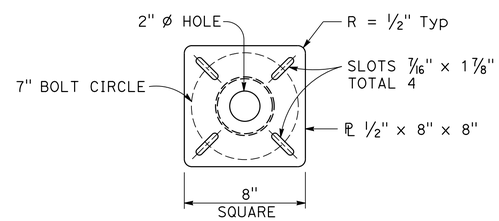

TOP PLATE DETAIL

GENERAL NOTES:

SPECIFICATIONS

Design: AASHTO Standard Specifications for Structural Supports for Highway Signs, Luminaires and Traffic Signals, Sixth Edition

LOADING

Wind Loading: 100 MPH (3-sec gust)

UNIT STRESSES

Structural Steel: fy = 55,000 psi tapered steel tube
fy = 50,000 psi unless otherwise noted.

Anchor bolts: fy = 55,000 psi

Reinforced Concrete: f'c = 3,600 psi
fy = 60,000 psi

NOTES:

1. For pole locations, see "ROADWAY PLANS".
2. All steel must be galvanized after fabrication.
3. During pole erection the post must be raked as necessary with the use of leveling nuts to provide a plumb pole axis.
4. Foundation design is based on AASHTO LTS-6 article 13.6 Broms' approximate procedure assuming a cohessionless material. The angle of internal friction used is 30 degrees and unit weight of soil used is 120 lbs/ft^3.
5. For details not shown, see "2010 STANDARD PLANS" and "2010 REVISED STANDARD PLANS".
6. For additional details not shown for Type CCTV 45, see "2010 REVISED STANDARD PLANS" ES-16B.

NOTE:
THE CONTRACTOR MUST VERIFY ALL CONTROLLING FIELD DIMENSIONS BEFORE ORDERING OR FABRICATING ANY MATERIAL.

STANDARD PLAN SHEET No.
DETAIL No.

NO SCALE

BRANCH CHIEF *JEFF WOODY*

	BY	CHECKED
DESIGN	E.LOPEZ	M.LICHA
DETAILS	T.NGUYEN	M.LICHA
QUANTITIES		

STATE OF CALIFORNIA
DEPARTMENT OF TRANSPORTATION

DIVISION OF ENGINEERING SERVICES
DESIGN AND TECHNICAL SERVICES
SPECIAL DESIGNS BRANCH A

BRIDGE NO. N/A
POST MILE 2.4/7.2

CCTV 45 MODIFIED
POLE DETAILS

SES-1

(ENGLISH) SPECIAL DESIGNS BRANCH BORDER SHEET (REV. 4-1-14)

ORIGINAL SCALE IN INCHES FOR REDUCED PLANS 0 1 2 3

UNIT: 3619
PROJECT NUMBER & PHASE: 0712000075-1 CONTRACT NO.: 07-290801

DISREGARD PRINTS BEARING EARLIER REVISION DATES

REVISION DATES 5-9-16 5-18-16 6-17-16 5-18-16

SHEET 1 OF 1

FILE => /2016sd/07-290801/SES_1

USERNAME => s115484 DATE PLOTTED => 07-SEP-2016 TIME PLOTTED => 12:28

M

Maint	MAINTENANCE
Max	MAXIMUM
MB	METAL BEAM
MBB	METAL BEAM BARRIER
MBGR	METAL BEAM GUARD RAILING
Med	MEDIAN
MGS	MIDWEST GUARDRAIL SYSTEM
MH	MANHOLE
Min	MINIMUM
Misc	MISCELLANEOUS
Misc I & S	MISCELLANEOUS IRON AND STEEL
Mkr	MARKER
Mod	MODIFIED,
	MODIFY
Mon	MONUMENT
MP	METAL PLATE
MPGR	METAL PLATE GUARD RAILING
MR	MOVEMENT RATING
MSE	MECHANICALLY STABILIZED EMBANKMENT
Mt	MOUNTAIN, MOUNT
Mtl	MATERIAL
MVP	MAINTENANCE VEHICLE PULLOUT

N

N	NORTH
NB	NORTHBOUND
No.	NUMBER (MUST HAVE PERIOD)
Nos.	NUMBERS (MUST HAVE PERIOD)
NPS	NOMINAL PIPE SIZE
NS	NEAR SIDE
NSP	NEW STANDARD PLAN
NTS	NOT TO SCALE

O

Oblr	OBLITERATE
OC	OVERCROSSING
OD	OUTSIDE DIAMETER
OF	OUTSIDE FACE
OG	ORIGINAL GROUND
OGAC	OPEN GRADED ASPHALT CONCRETE
OGFC	OPEN GRADED FRICTION COURSE
OH	OVERHEAD
OHWM	ORDINARY HIGH WATER MARK
O-O	OUT TO OUT
Opp	OPPOSITE
OSD	OVERSIDE DRAIN

P

P	PAGE
PAP	PERFORATED ALUMINUM PIPE
PB	PULL BOX
PC	POINT OF CURVATURE,
	PRECAST
PCC	POINT OF COMPOUND CURVE,
	PORTLAND CEMENT CONCRETE
PCMS	PORTABLE CHANGEABLE MESSAGE SIGN
PCP	PERFORATED CONCRETE PIPE,
	PRESTRESSED CONCRETE PIPE
PCVC	POINT OF COMPOUND VERTICAL CURVE
PEC	PERMIT TO ENTER AND CONSTRUCT
Ped	PEDESTRIAN
Ped OC	PEDESTRIAN OVERCROSSING
Ped UC	PEDESTRIAN UNDERCROSSING
Perm Mtl	PERMEABLE MATERIAL

P continued

PG	PROFILE GRADE
PI	POINT OF INTERSECTION
PJP	PARTIAL JOINT PENETRATION
Pkwy	PARKWAY
ℙ,PL	PLATE
P/L	PROPERTY LINE
PM	POST MILE,
	TIME FROM NOON TO MIDNIGHT
PN	PAVING NOTCH
POC	POINT OF HORIZONTAL CURVE
POT	POINT OF TANGENT
POVC	POINT OF VERTICAL CURVE
PP	PIPE PILE,
	PLASTIC PIPE,
	POWER POLE
PPL	PREFORMED PERMEABLE LINER
PPP	PERFORATED PLASTIC PIPE
PRC	POINT OF REVERSE CURVE
PRF	PAVEMENT REINFORCING FABRIC
PRVC	POINT OF REVERSE VERTICAL CURVE
PS&E	PLANS, SPECIFICATIONS AND ESTIMATES
PS, P/S	PRESTRESSED
PSP	PERFORATED STEEL PIPE
PT	POINT OF TANGENCY
PVC	POLYVINYL CHLORIDE
Pvmt	PAVEMENT

Q

Qty	QUANTITY

R

R	RADIUS
R & D	REMOVE AND DISPOSE
R & S	REMOVE AND SALVAGE
R/C	RATE OF CHANGE
RCA	REINFORCED CONCRETE ARCH
RCB	REINFORCED CONCRETE BOX
RCP	REINFORCED CONCRETE PIPE
RCPA	REINFORCED CONCRETE PIPE ARCH
Rd	ROAD
Reinf	REINFORCED,
	REINFORCEMENT,
	REINFORCING
Rel	RELOCATE
Repl	REPLACEMENT
Ret	RETAINING
Rev	REVISED, REVISION
Rdwy	ROADWAY
RHMA	RUBBERIZED HOT MIX ASPHALT
Riv	RIVER
RM	ROAD-MIXED
RP	RADIUS POINT,
	REFERENCE POINT
RR	RAILROAD
RSP	ROCK SLOPE PROTECTION,
	REVISED STANDARD PLAN
Rt	RIGHT
Rte	ROUTE
RW	REDWOOD,
	RETAINING WALL
R/W	RIGHT OF WAY
Rwy	RAILWAY

S

S	SOUTH,
	SUPPLEMENT
SAE	STRUCTURE APPROACH EMBANKMENT
Salv	SALVAGE
SAPP	STRUCTURAL ALUMINUM PLATE PIPE
SB	SOUTHBOUND
SC	SAND CUSHION
SCSP	SLOTTED CORRUGATED STEEL PIPE
SD	STORM DRAIN
Sec	SECOND,
	SECTION
Sep	SEPARATION
SG	SUBGRADE
Shld	SHOULDER
Sht	SHEET
Sim	SIMILAR
₤	STATION LINE
SM	SELECTED MATERIAL
Spec	SPECIAL,
	SPECIFICATIONS
SPP	SLOTTED PLASTIC PIPE
SS	SLOPE STAKE
SSBM	STRAP AND SADDLE BRACKET METHOD
SSD	STRUCTURAL SECTION DRAIN
SSPA	STRUCTURAL STEEL PLATE ARCH
SSPP	STRUCTURAL STEEL PLATE PIPE
SSPPA	STRUCTURAL STEEL PLATE PIPE ARCH
SSRP	STEEL SPIRAL RIB PIPE
St	STREET
Sta	STATION
STBB	SINGLE THRIE BEAM BARRIER
Std	STANDARD
Str	STRUCTURE
Surf	SURFACING
SW	SIDEWALK,
	SOUND WALL
Swr	SEWER
Sym	SYMMETRICAL
S4S	SURFACE 4 SIDES

T

T	SEMI-TANGENT
Tan	TANGENT
TBB	THRIE BEAM BARRIER
Tbr	TIMBER
TC	TOP OF CURB
TCB	TRAFFIC CONTROL BOX
TCE	TEMPORARY CONSTRUCTION EASEMENT
Tel	TELEPHONE
Temp	TEMPORARY
TG	TOP OF GRADE
Tot	TOTAL
TP	TELEPHONE POLE
TPB	TREATED PERMEABLE BASE
TPM	TREATED PERMEABLE MATERIAL
Trans	TRANSITION

T continued

TS	TRANSVERSE,
	TRAFFIC SIGNAL,
	TUBULAR STEEL
Typ	TYPICAL

U

UC	UNDERCROSSING
UD	UNDERDRAIN
UG	UNDERGROUND
UON	UNLESS OTHERWISE NOTED
UP	UNDERPASS

V

V	VALVE,
	DESIGN SPEED
Var	VARIABLE,
	VARIES
VC	VERTICAL CURVE
VCP	VITRIFIED CLAY PIPE
Vert	VERTICAL
Via	VIADUCT
Vol	VOLUME

W

W	WEST,
	WIDTH
WB	WESTBOUND
WH	WEEP HOLE
WM	WIRE MESH
WS	WATER SURFACE
WSP	WELDED STEEL PIPE
Wt	WEIGHT
WV	WATER VALVE
WW	WINGWALL
WWLOL	WINGWALL LAYOUT LINE

X

X Sec	CROSS SECTION
Xing	CROSSING

Y

Yr	YEAR
Yrs	YEARS

Dist	COUNTY	ROUTE	POST MILES TOTAL PROJECT	SHEET No.	TOTAL SHEETS
07	LA	1	2.4/7.2	165	200

Grace M. Tsushima
REGISTERED CIVIL ENGINEER

July 19, 2013
PLANS APPROVAL DATE

REGISTERED PROFESSIONAL ENGINEER
Grace M. Tsushima
No. C49814
Exp. 9-30-14
CIVIL
STATE OF CALIFORNIA

THE STATE OF CALIFORNIA OR ITS OFFICERS OR AGENTS SHALL NOT BE RESPONSIBLE FOR THE ACCURACY OR COMPLETENESS OF SCANNED COPIES OF THIS PLAN SHEET.

TO ACCOMPANY PLANS DATED 6-30-16

UNIT OF MEASUREMENT SYMBOLS:

Some of the symbols used in the project plan quantity tables and in the Bid Item List are:

TABLE A

SYMBOL USED	DEFINITIONS
ACRE	ACRE
CF	CUBIC FOOT
CY	CUBIC YARD
EA	EACH
GAL	GALLON
LB	POUND
LF	LINEAR FOOT
SQFT	SQUARE FOOT
SQYD	SQUARE YARD
STA	100 FEET
TAB	TABLET
TON	2,000 POUNDS

Some of the symbols used in the plans other than in the project plan quantity tables are:

TABLE B

SYMBOL USED	DEFINITIONS
ksi	KIPS PER SQUARE INCH
ksf	KIPS PER SQUARE FOOT
psi	POUNDS PER SQUARE INCH
psf	POUNDS PER SQUARE FOOT
lb/ft^3, pcf	POUNDS PER CUBIC FOOT
tsf	TONS PER SQUARE FOOT
mph, MPH *	MILES PER HOUR
ø	NOMINAL DIAMETER
oz	OUNCE
lb	POUND
kip	1,000 POUNDS
cal	CALORIE
ft	FOOT OR FEET
gal	GALLON

* For use on a sign panel only

STATE OF CALIFORNIA
DEPARTMENT OF TRANSPORTATION

ABBREVIATIONS (SHEET 2 OF 2)

NO SCALE

RSP A10B DATED JULY 19, 2013 SUPERSEDES STANDARD PLAN A10B DATED MAY 20, 2011 - PAGE 2 OF THE STANDARD PLANS BOOK DATED 2010.

REVISED STANDARD PLAN RSP A10B

2010 REVISED STANDARD PLAN RSP A10B

6-7-13

Dist	COUNTY	ROUTE	POST MILES TOTAL PROJECT	SHEET No.	TOTAL SHEETS
07	LA	1	2.4/7.2	166	200

REGISTERED CIVIL ENGINEER

April 20, 2012
PLANS APPROVAL DATE

REGISTERED PROFESSIONAL ENGINEER
Roberta L. McLaughlin
No. C40375
Exp. 3-31-13
CIVIL
STATE OF CALIFORNIA

THE STATE OF CALIFORNIA OR ITS OFFICERS OR AGENTS SHALL NOT BE RESPONSIBLE FOR THE ACCURACY OR COMPLETENESS OF SCANNED COPIES OF THIS PLAN SHEET.

TO ACCOMPANY PLANS DATED 6-30-16

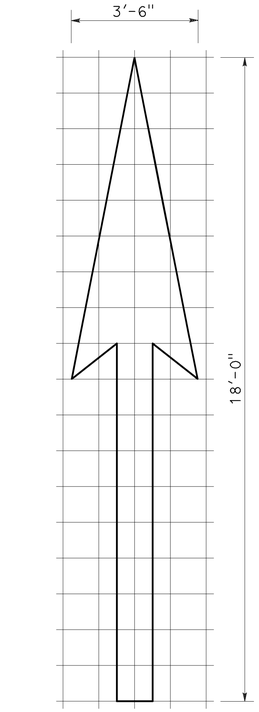

A=25 ft^2

TYPE I 18'-0" ARROW

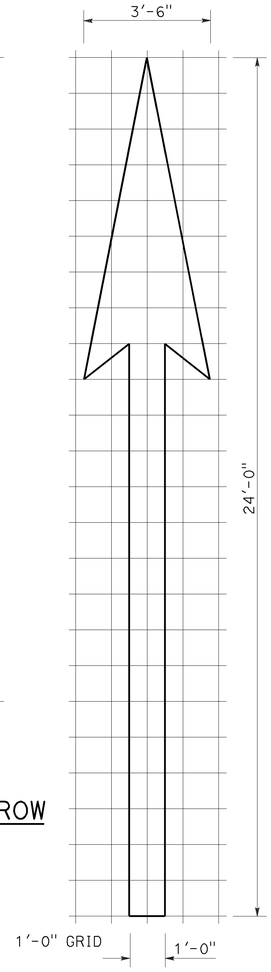

A=31 ft^2

TYPE I 24'-0" ARROW

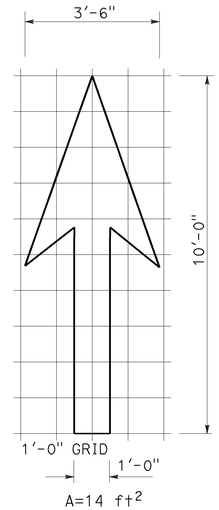

A=14 ft^2

TYPE I 10'-0" ARROW

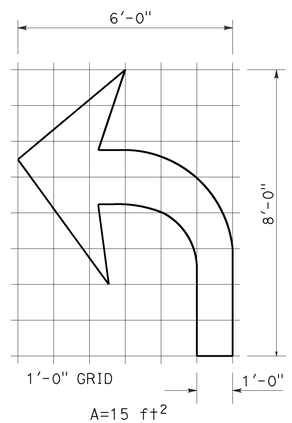

A=15 ft^2

TYPE IV (L) ARROW

(For Type IV (R) arrow, use mirror image)

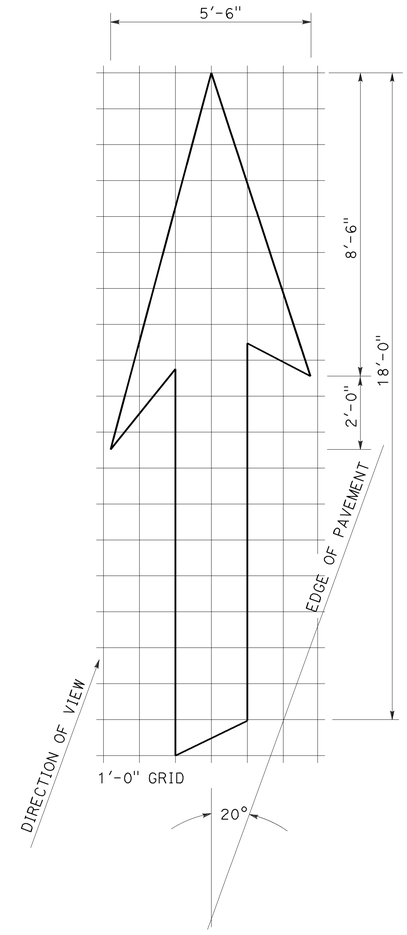

A=42 ft^2

TYPE VI ARROW

Right lane drop arrow (For left lane, use mirror image)

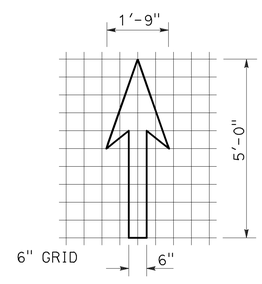

A=3.5 ft^2

BIKE LANE ARROW

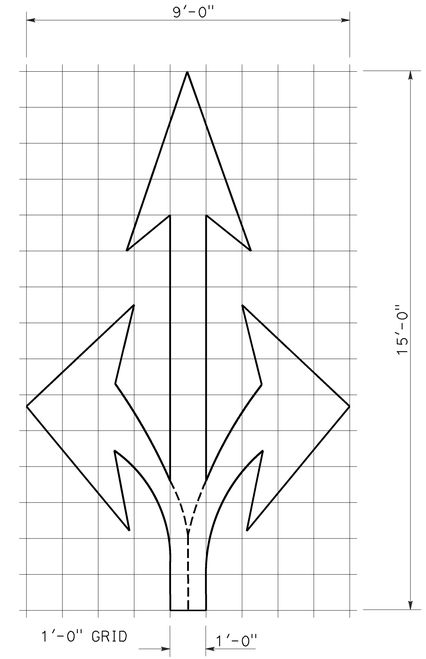

A=36 ft^2

TYPE VIII ARROW

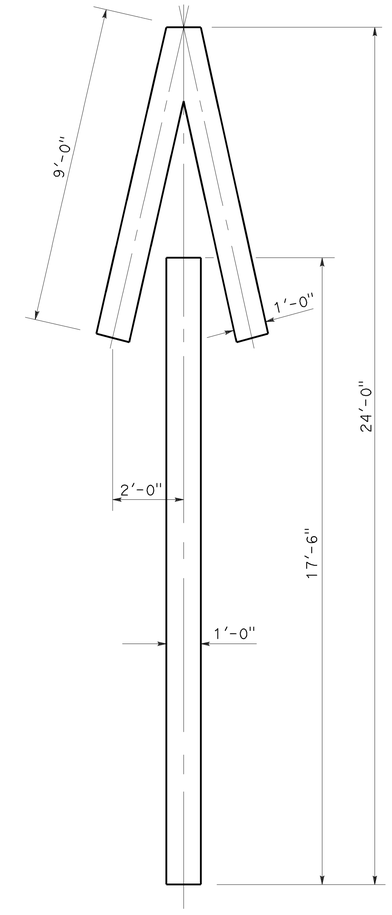

A=33 ft^2

TYPE V ARROW

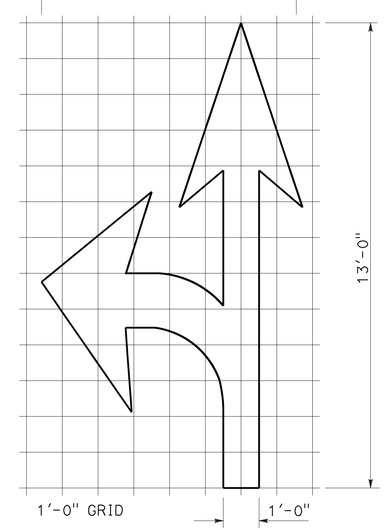

A=27 ft^2

TYPE VII (L) ARROW

(For Type VII (R) arrow, use mirror image)

NOTE:
Minor variations in dimensions may be accepted by the Engineer.

STATE OF CALIFORNIA
DEPARTMENT OF TRANSPORTATION

PAVEMENT MARKINGS ARROWS

NO SCALE

RSP A24A DATED APRIL 20, 2012 SUPERSEDES STANDARD PLAN A24A DATED MAY 20, 2011 - PAGE 13 OF THE STANDARD PLANS BOOK DATED 2010.

REVISED STANDARD PLAN RSP A24A

2010 REVISED STANDARD PLAN RSP A24A

3-14-12

Dist	COUNTY	ROUTE	POST MILES TOTAL PROJECT	SHEET No.	TOTAL SHEETS
07	LA	1	2.4/7.2	167	200

REGISTERED CIVIL ENGINEER

July 20, 2012
PLANS APPROVAL DATE

REGISTERED PROFESSIONAL ENGINEER
Roberta L. McLaughlin
No. C40375
Exp. 3-31-13
CIVIL
STATE OF CALIFORNIA

THE STATE OF CALIFORNIA OR ITS OFFICERS OR AGENTS SHALL NOT BE RESPONSIBLE FOR THE ACCURACY OR COMPLETENESS OF SCANNED COPIES OF THIS PLAN SHEET.

TO ACCOMPANY PLANS DATED 6-30-16

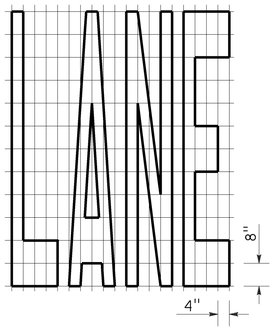

A=24 ft²

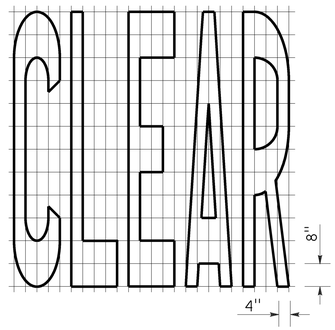

A=27 ft²

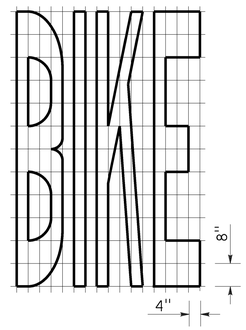

A=21 ft²

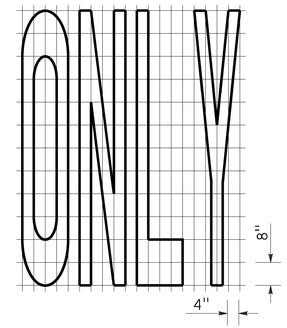

A=22 ft²

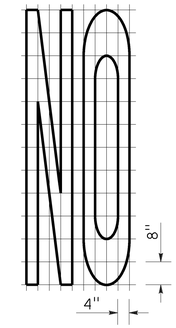

A=14 ft²

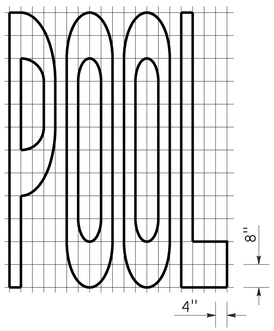

A=23 ft²

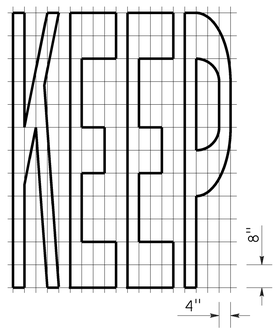

A=24 ft²

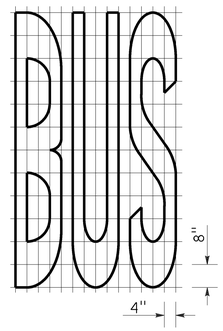

A=20 ft²

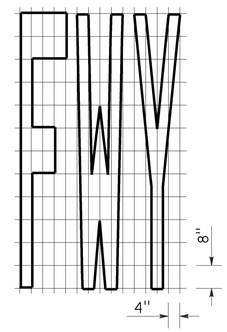

A=16 ft²

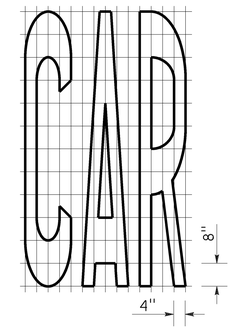

A=17 ft²

WORD MARKINGS			
ITEM	ft²	ITEM	ft²
LANE	24	NO	14
POOL	23	BIKE	21
CAR	17	BUS	20
CLEAR	27	ONLY	22
KEEP	24	FWY	16

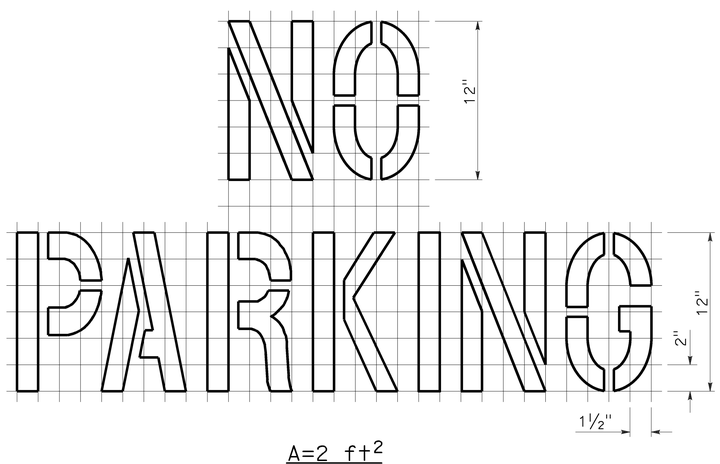

A=2 ft²
See Notes 6 and 7

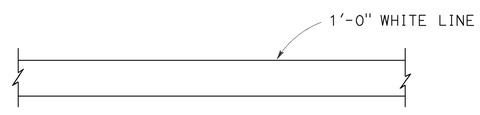

LIMIT LINE (STOP LINE)

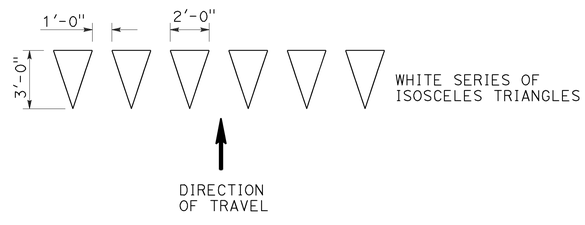

YIELD LINE

NOTES:

1. If a message consists of more than one word, it should read "UP", i.e., the first word should be nearest the driver.
2. The space between words should be at least four times the height of the characters for low speed roads, but not more than ten times the height of the characters. The space may be reduced appropriately where there is limited space because of local conditions.
3. Minor variations in dimensions may be accepted by the Engineer.
4. Portions of a letter, number or symbol may be separated by connecting segments not to exceed 2" in width.
5. The words "NO PARKING" pavement marking is to be used for parking facilities. For typical locations of markings, see Standard Plans A90A and A90B.
6. The words "NO PARKING", shall be painted in white letters no less than 1'-0" high on a contrasting background and located so that it is visible to traffic enforcement officials.

STATE OF CALIFORNIA
DEPARTMENT OF TRANSPORTATION

PAVEMENT MARKINGS WORDS, LIMIT AND YIELD LINES

NO SCALE

RSP A24E DATED JULY 20, 2012 SUPERSEDES STANDARD PLAN A24E
DATED MAY 20, 2011 - PAGE 17 OF THE STANDARD PLANS BOOK DATED 2010.

REVISED STANDARD PLAN RSP A24E

2010 REVISED STANDARD PLAN RSP A24E

6-12-12

Dist	COUNTY	ROUTE	POST MILES TOTAL PROJECT	SHEET No.	TOTAL SHEETS
07	LA	1	2.4/7.2	168	200

REGISTERED CIVIL ENGINEER

July 20, 2012
PLANS APPROVAL DATE

REGISTERED PROFESSIONAL ENGINEER
Roberta L. McLaughlin
No. C40375
Exp. 3-31-13
CIVIL
STATE OF CALIFORNIA

THE STATE OF CALIFORNIA OR ITS OFFICERS OR AGENTS SHALL NOT BE RESPONSIBLE FOR THE ACCURACY OR COMPLETENESS OF SCANNED COPIES OF THIS PLAN SHEET.

TO ACCOMPANY PLANS DATED 6-30-16

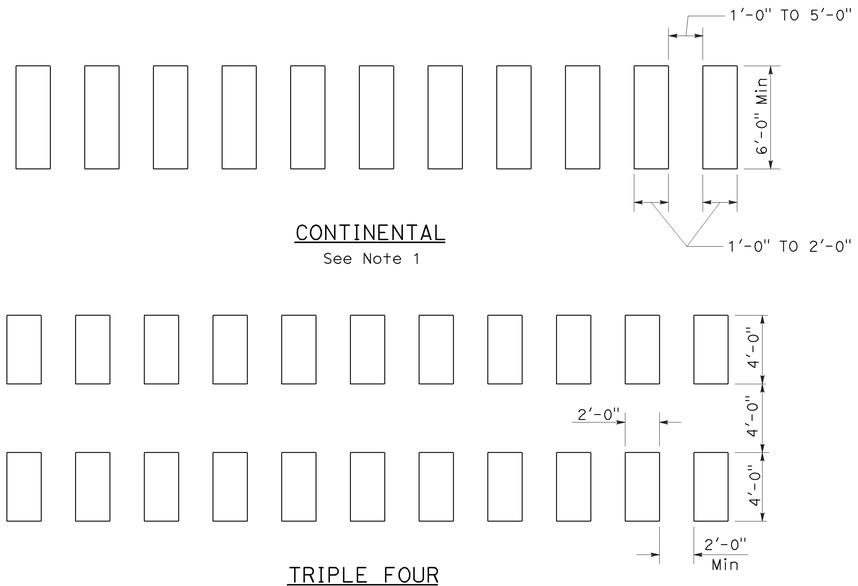

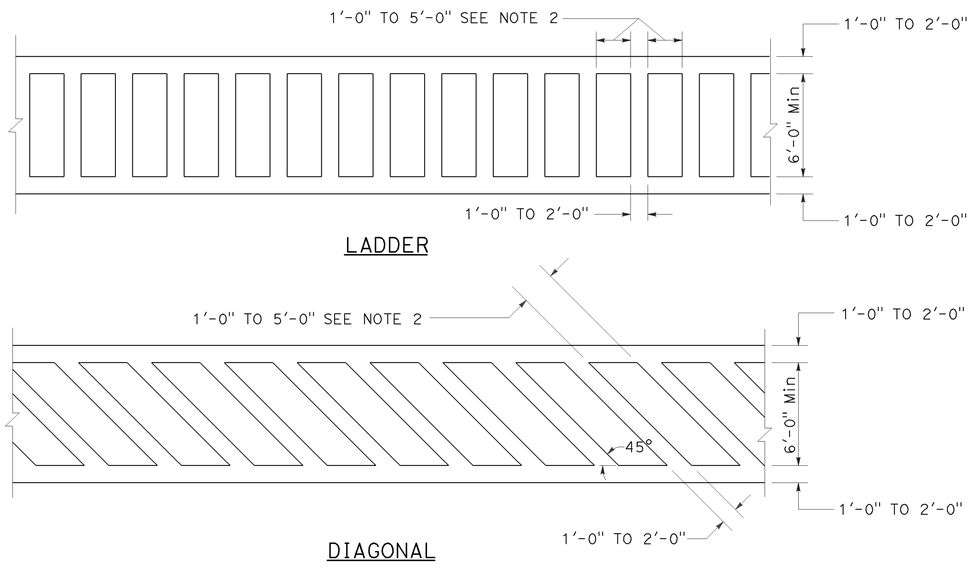

HIGHER VISIBILITY CROSSWALKS

NOTES:

1. Spaces between markings should be placed in wheel tracks of each lane.
2. Spacings not to exceed 2.5 times width of longitudinal line.
3. All crosswalk markings must be white except for those near schools must be yellow.

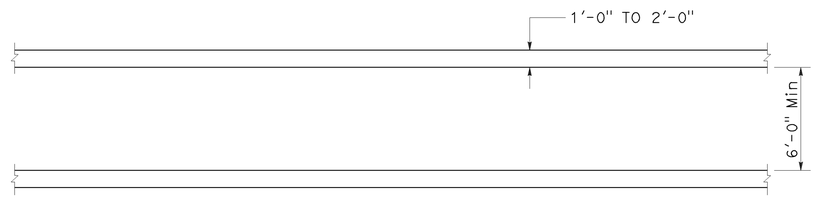

BASIC

STATE OF CALIFORNIA
DEPARTMENT OF TRANSPORTATION

PAVEMENT MARKINGS CROSSWALKS

NO SCALE

RSP A24F DATED JULY 20, 2012 SUPPLEMENTS THE STANDARD PLANS BOOK DATED 2010.

REVISED STANDARD PLAN RSP A24F

2010 REVISED STANDARD PLAN RSP A24F

6-28-12

Dist	COUNTY	ROUTE	POST MILES TOTAL PROJECT	SHEET No.	TOTAL SHEETS
07	LA	1	2.4/7.2	169	200

REGISTERED CIVIL ENGINEER

July 19, 2013
PLANS APPROVAL DATE

REGISTERED PROFESSIONAL ENGINEER Michael Janzen No. 44788 Exp. 03-31-14 CIVIL STATE OF CALIFORNIA

THE STATE OF CALIFORNIA OR ITS OFFICERS OR AGENTS SHALL NOT BE RESPONSIBLE FOR THE ACCURACY OR COMPLETENESS OF SCANNED COPIES OF THIS PLAN SHEET.

TO ACCOMPANY PLANS DATED 6-30-16

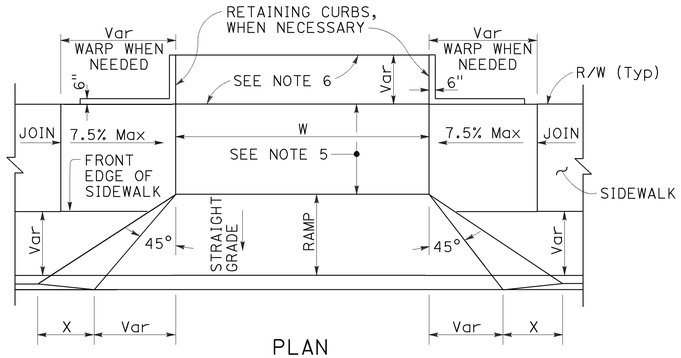

PLAN

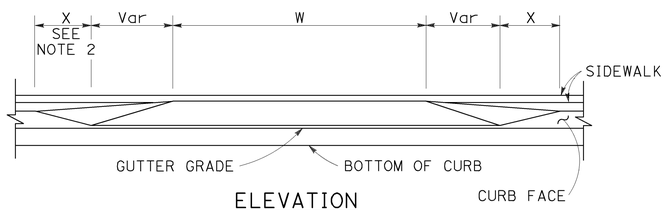

ELEVATION

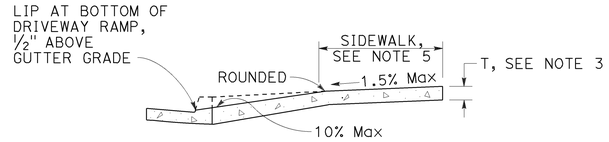

CASE A

Typical driveway, sidewalk not depressed

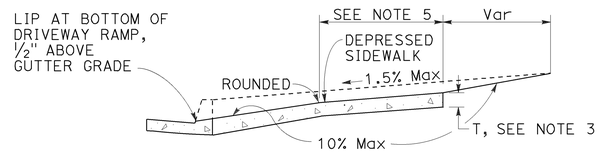

CASE B

Driveway with depressed sidewalk

SECTIONS

DRIVEWAYS

TABLE A

CURB TYPE	DIMENSIONS			
	"H1"	"H2"	"W1"	"W2"
A1-6	1'-2"	6"	7½"	1½"
A1-8	1'-4"	8"	8"	2"
A2-6	1'-0"	6"	2'-7½"	1½"
A2-8	1'-2"	8"	2'-8"	2"
A3-6	6"	5"	7¼"	1¼"
A3-8	8"	7"	7¾"	1¾"
B1-4	1'-0"	4"	7½"	2½"
B1-6	1'-2"	6"	9"	4"
B2-4	10"	4"	2'-7½"	2½"
B2-6	1'-0"	6"	2'-9"	4"
B3-4	4"	3"	7"	2"
B3-6	6"	5"	8½"	3½"
D-4	10"	4"	1'-6"	1'-1"
D-6	1'-0"	6"	2'-2"	1'-9"

CURB QUANTITIES

TYPE	CUBIC YARDS PER LINEAR FOOT
A1-6	0.02585
A1-8	0.03084
A2-6	0.05903
A2-8	0.06379
A3-6	0.01036
A3-8	0.01435
B1-4	0.02185
B1-6	0.02930
B2-4	0.05515
B2-6	0.06171
B3-4	0.00641
B3-6	0.01074
B4	0.05709
D-4	0.04083
D-6	0.06804
E	0.06661

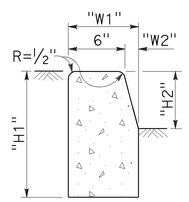

TYPE A1 CURBS

See Table A

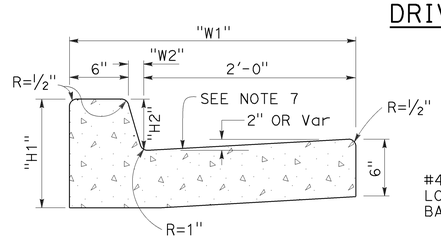

TYPE A2 CURBS

See Table A

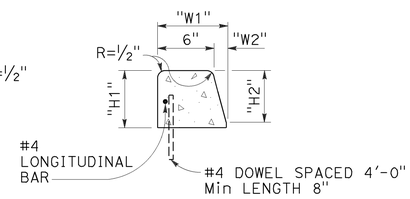

TYPE A3 CURBS

Superimposed on existing pavement
See Table A

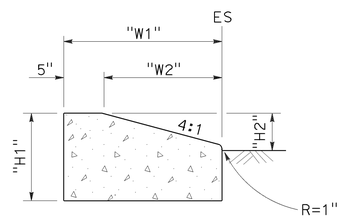

TYPE D CURBS

See Table A

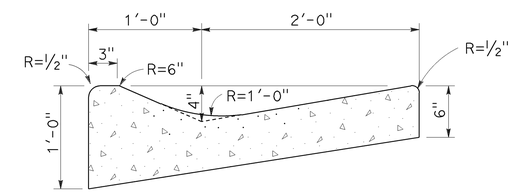

TYPE E CURB

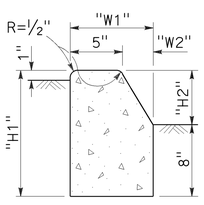

TYPE B1 CURBS

See Table A

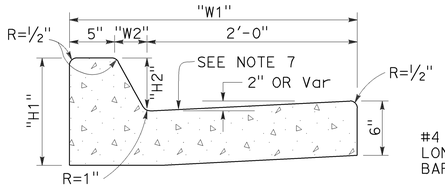

TYPE B2 CURBS

See Table A

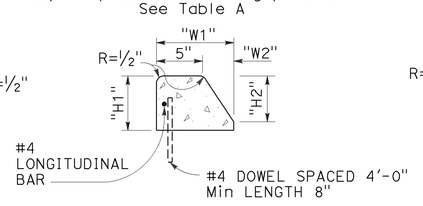

TYPE B3 CURBS

Superimposed on existing pavement
See Table A

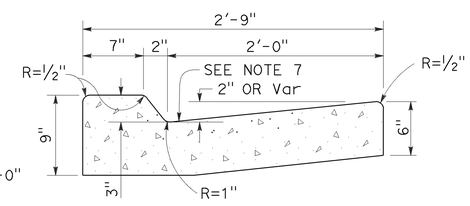

TYPE B4 CURBS

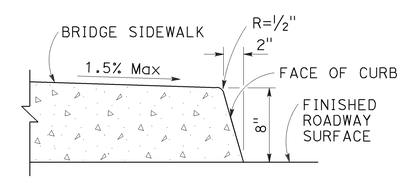

TYPE H CURB

On Bridges

CURBS

NOTES:

1. Case A driveway section typically applies.
2. X=3'-0" except for curb heights over 10" where 4:1 slopes shall be used on curb slope.
3. Sidewalk and ramp thickness "T" at driveway shall be 4" for residental and 6" for commercial.
4. Difference in slope of the driveway ramp and the slope of a line between the gutter and a point on the roadway 5'-0" from gutter line shall not exceed 15%. Reduce driveway ramp slope, not gutter slope, where required.
5. Minimum width of clear passageway for sidewalk shall be 4'-2".
6. Retaining curbs and acquisition of construction easement may be necessary for narrow sidewalks or curb heights in excess of 6".
7. Across the pedestrian route at curb ramp locations, the gutter pan slope shall not exceed 1" of depth for each 2'-0" of width.

STATE OF CALIFORNIA
DEPARTMENT OF TRANSPORTATION

CURBS AND DRIVEWAYS

NO SCALE

RSP A87A DATED JULY 19, 2013 SUPERSEDES STANDARD PLAN A87A
DATED MAY 20, 2011 - PAGE 119 OF THE STANDARD PLANS BOOK DATED 2010.

REVISED STANDARD PLAN RSP A87A

2010 REVISED STANDARD PLAN RSP A87A

7-8-13

Dist	COUNTY	ROUTE	POST MILES TOTAL PROJECT	SHEET No.	TOTAL SHEETS
07	LA	1	2.4/7.2	170	200

REGISTERED CIVIL ENGINEER

July 15, 2016
PLANS APPROVAL DATE

Hector David Cordova
No. C41957
Exp. 3-31-18
CIVIL
STATE OF CALIFORNIA
REGISTERED PROFESSIONAL ENGINEER

THE STATE OF CALIFORNIA OR ITS OFFICERS OR AGENTS SHALL NOT BE RESPONSIBLE FOR THE ACCURACY OR COMPLETENESS OF SCANNED COPIES OF THIS PLAN SHEET.

TO ACCOMPANY PLANS DATED 6-30-16

2010 REVISED STANDARD PLAN RSP A88A

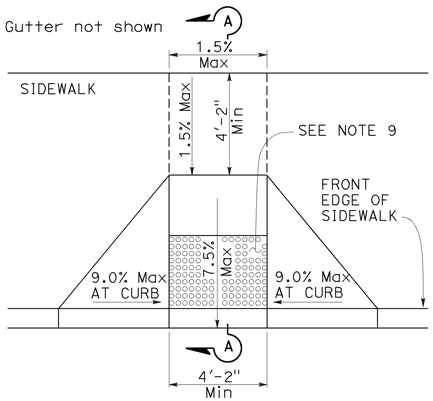

CASE A

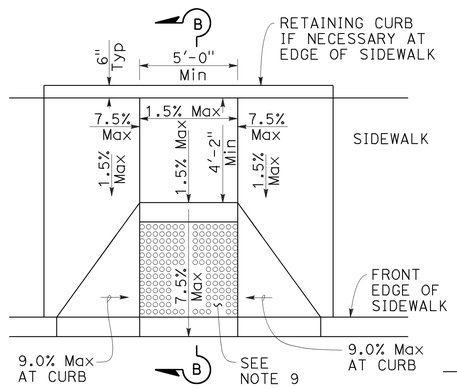

CASE B

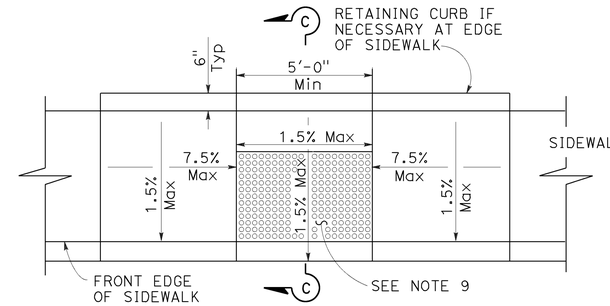

CASE C

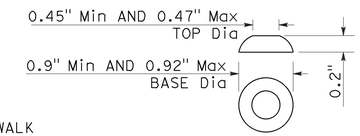

RAISED TRUNCATED DOME

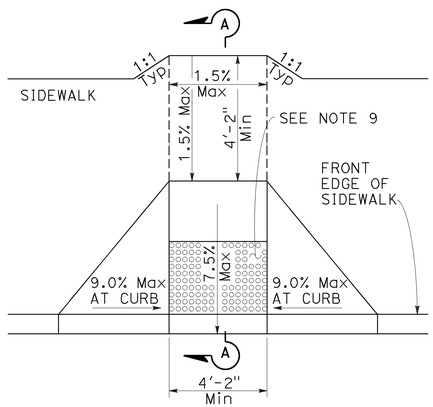

CASE D

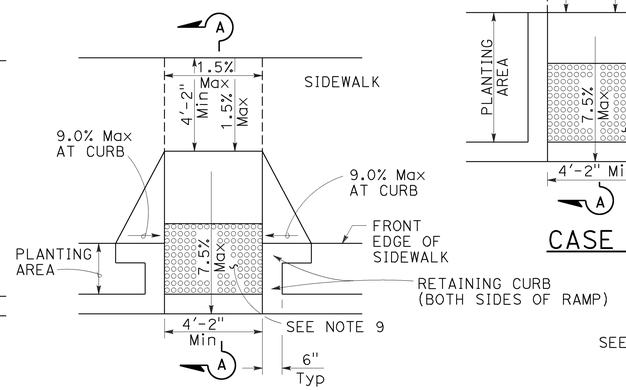

CASE E

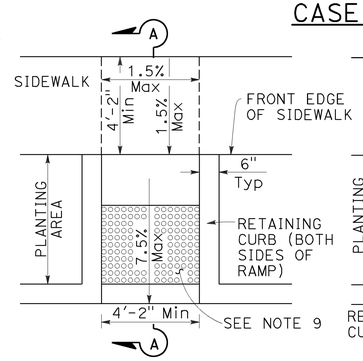

CASE F

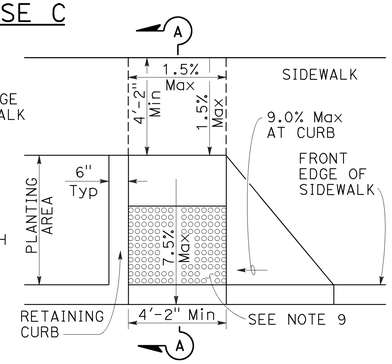

CASE G
See Note 4

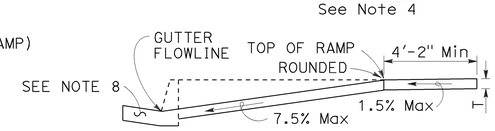

SECTION A-A

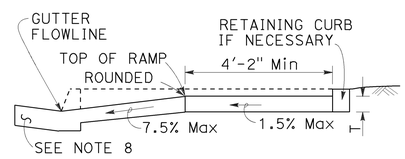

SECTION B-B
Depress entire sidewalk as required

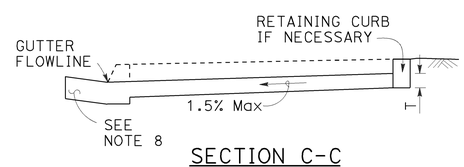

SECTION C-C

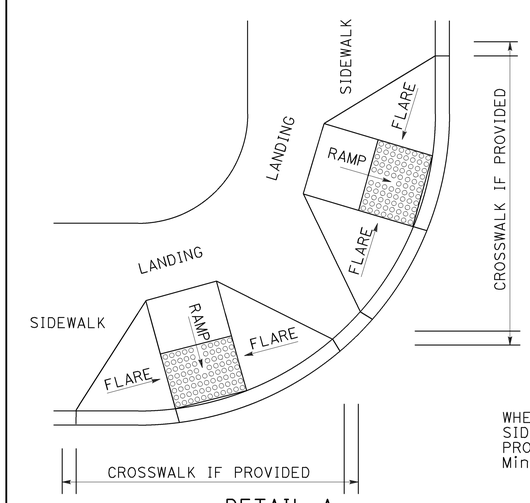

DETAIL A
TYPICAL TWO-RAMP CORNER INSTALLATION
See Note 1

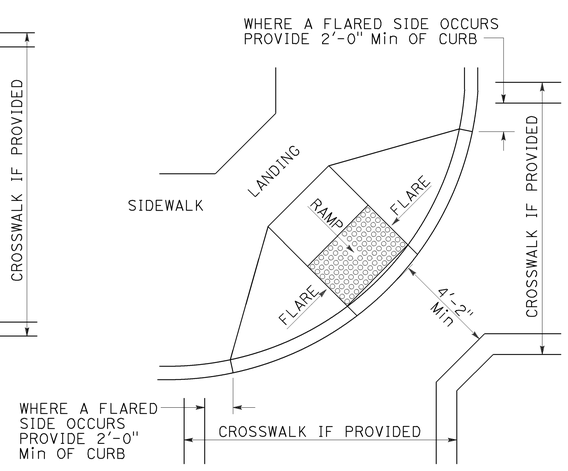

DETAIL B
TYPICAL ONE-RAMP CORNER INSTALLATION
See Notes 1 and 3

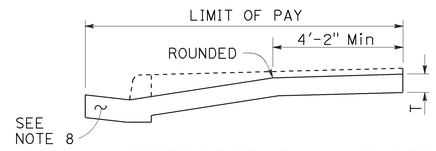

RETROFIT PAY LIMITS
Existing curb and sidewalk

NOTES:

1. As site conditions dictate, Case A through Case G curb ramps may be used for corner installations similar to those shown in Detail A and Detail B. The case of curb ramps used in Detail A do not have to be the same. Case A through Case G curb ramps also may be used at mid block locations, as site conditions dictate.
2. If distance from curb to back of sidewalk is too short to accommodate ramp and 4'-2" platform (landing) as shown in Case A, the sidewalk may be depressed longitudinally as in Case B, or C or may be widened as in Case D.
3. When ramp is located in center of curb return, crosswalk configuration must be similar to that shown for Detail B.
4. As site conditions dictate, the retaining curb side and the flared side of the Case G ramp shall be constructed in reversed position.
5. If located on a curve, the sides of the ramp need not be parallel, but the minimum width of the ramp shall be 4'-2".
6. Side slope of ramp flares vary uniformly from a maximum of 9.0% at curb to conform with longitudinal sidewalk slope adjacent to top of the ramp, except in Case C and Case F.
7. The adjacent surfaces at transitions at curb ramps to walks, gutters, and streets shall be at the same level.
8. Counter slopes of adjoining gutters and road surfaces immediately adjacent to and within 24 inches of the curb ramp shall not be steeper than 1:20 (5.0%). Gutter pan slope shall not exceed 1" of depth for each 2'-0" of width.
9. Curb ramps shall have a detectable warning surface that extends the full width and 3'-0" depth of the ramp. A 4'-0" wide detectable warning surface may be used on a 4'-2" wide curb ramp. Detectable Warning Surfaces shall conform to the requirements in the Standard Specifications.
10. Sidewalk and ramp thickness, "T", shall be 3½" minimum.
11. Utility pull boxes, manholes, vaults and all other utility facilities within the boundaries of the curb ramp will be relocated or adjusted to grade by the owner prior to, or in conjunction with, curb ramp construction.
12. Detectable warning surface may have to be cut to allow removal of utility covers while maintaining full detectable warning width and depth.

RAISED TRUNCATED DOME PATTERN (IN-LINE)
DETECTABLE WARNING SURFACE
See Note 9

STATE OF CALIFORNIA
DEPARTMENT OF TRANSPORTATION

CURB RAMP DETAILS

NO SCALE

RSP A88A DATED JULY 15, 2016 SUPERSEDES RSP A88A DATED JULY 3, 2015, RSP A88A DATED MARCH 21, 2014 AND RSP A88A DATED JULY 19, 2013 AND STANDARD PLAN A88A DATED MAY 20, 2011 - PAGE 121 OF THE STANDARD PLANS BOOK DATED 2010.

REVISED STANDARD PLAN RSP A88A

3-30-16

Dist	COUNTY	ROUTE	POST MILES TOTAL PROJECT	SHEET No.	TOTAL SHEETS
07	LA	1	2.4/7.2	171	200

REGISTERED CIVIL ENGINEER

July 15, 2016
PLANS APPROVAL DATE

REGISTERED PROFESSIONAL ENGINEER
Hector David Cordova
No. C41957
Exp. 3-31-18
CIVIL
STATE OF CALIFORNIA

THE STATE OF CALIFORNIA OR ITS OFFICERS OR AGENTS SHALL NOT BE RESPONSIBLE FOR THE ACCURACY OR COMPLETENESS OF SCANNED COPIES OF THIS PLAN SHEET.

TO ACCOMPANY PLANS DATED 6-30-16

Gutter not shown

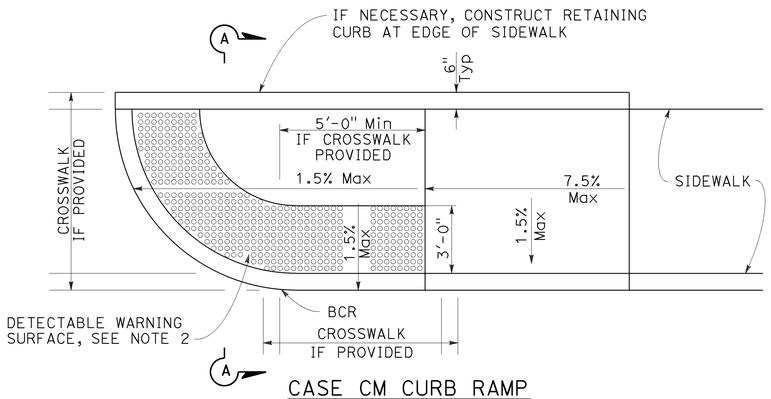

CASE CM CURB RAMP

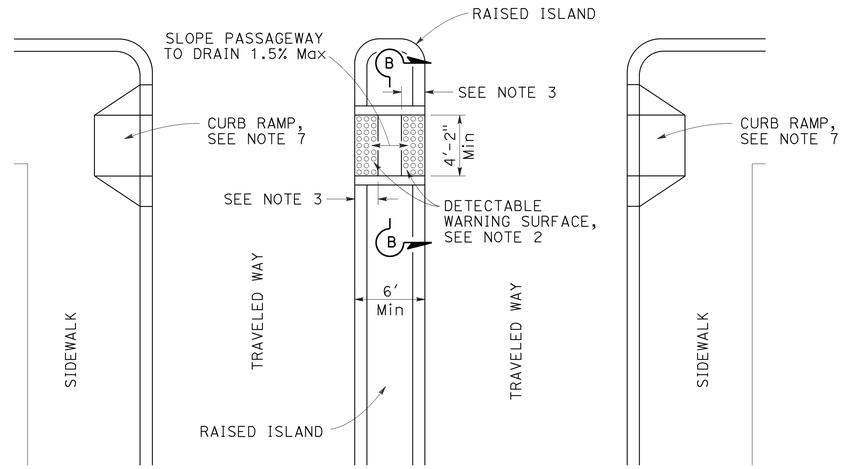

TYPE A PASSAGEWAY

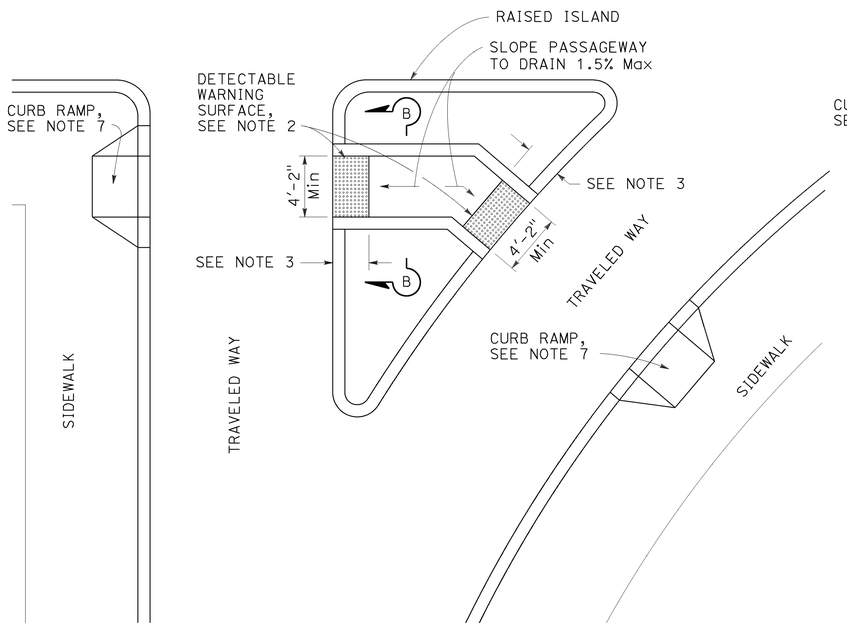

TYPE B PASSAGEWAY

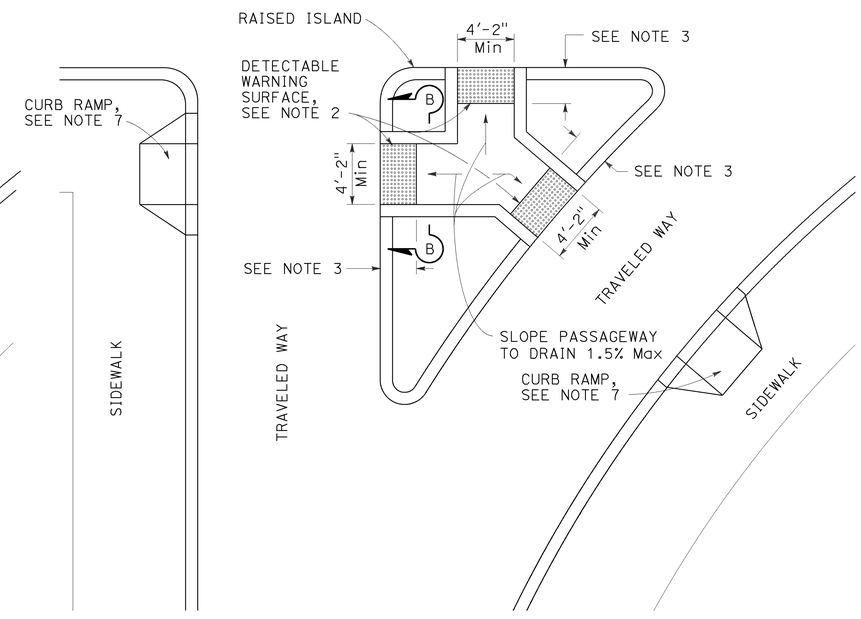

TYPE C PASSAGEWAY

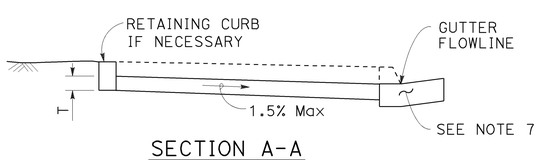

SECTION A-A

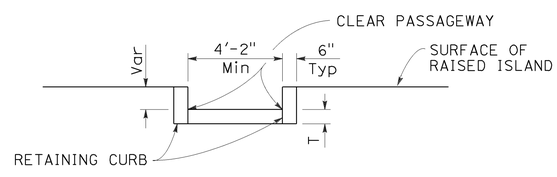

SECTION B-B

NOTES:

1. Sidewalk, ramp and passageway thickness, "T", shall be 3½" minimum.
2. For details of detectable warning surfaces, see Revised Standard Plan RSP A88A.
3. Where an island passageway length is greater than or equal to 6'-0", but less than 8'-0", each detectable warning surface shall extend the full width and 2'-0" depth of the passageway length. Where an island passageway length is greater than or equal to 8'-0", each detectable warning surface shall extend the full width and 3'-0" depth of the passageway length. A 4'-0" wide detectable warning surface may be used on a 4'-2" wide island passageway.
4. The adjacent surfaces at transitions at curb ramps to walks, gutters, and streets shall be at the same level.
5. Utility pull boxes, manholes, vaults and all other utility facilities within the boundaries of the curb ramp will be relocated or adjusted to grade by the owner prior to, or in conjunction with, curb ramp construction.
6. Detectable warning surface may have to be cut to allow removal of utility covers while maintaining full detectable warning width and depth.
7. For additional curb ramp details, see Revised Standard Plan RSP A88A.

STATE OF CALIFORNIA
DEPARTMENT OF TRANSPORTATION

CURB RAMP AND ISLAND PASSAGEWAY DETAILS

NO SCALE

RSP A88B DATED JULY 15, 2016 SUPERSEDES RSP A88B DATED JULY 3, 2015, RSP A88B DATED MARCH 21, 2014 AND RSP A88B DATED JULY 19, 2013 AND STANDARD PLAN A88B DATED MAY 20, 2011 - PAGE 122 OF THE STANDARD PLANS BOOK DATED 2010.

REVISED STANDARD PLAN RSP A88B

2010 REVISED STANDARD PLAN RSP A88B

3-29-16

Dist	COUNTY	ROUTE	POST MILES TOTAL PROJECT	SHEET No.	TOTAL SHEETS
07	LA	1	2.4/7.2	172	200

REGISTERED CIVIL ENGINEER

July 19, 2013
PLANS APPROVAL DATE

REGISTERED PROFESSIONAL ENGINEER
Gurinderpal Bhullar
No. C48815
Exp. 9-30-14
CIVIL
STATE OF CALIFORNIA

THE STATE OF CALIFORNIA OR ITS OFFICERS OR AGENTS SHALL NOT BE RESPONSIBLE FOR THE ACCURACY OR COMPLETENESS OF SCANNED COPIES OF THIS PLAN SHEET.

TO ACCOMPANY PLANS DATED 6-30-16

2010 REVISED STANDARD PLAN RSP T9

TABLE 1

TAPER LENGTH CRITERIA AND CHANNELIZING DEVICE SPACING

SPEED (S)	MINIMUM TAPER LENGTH * FOR WIDTH OF OFFSET 12 FEET (W)				MAXIMUM CHANNELIZING DEVICE SPACING		
					X	Y	Z **
	TANGENT 2L	MERGING L	SHIFTING L/2	SHOULDER L/3	TAPER	TANGENT	CONFLICT
mph	ft	ft	ft	ft	ft	ft	ft
20	160	80	40	27	20	40	10
25	250	125	63	42	25	50	12
30	360	180	90	60	30	60	15
35	490	245	123	82	35	70	17
40	640	320	160	107	40	80	20
45	1080	540	270	180	45	90	22
50	1200	600	300	200	50	100	25
55	1320	660	330	220	55	110	27
60	1440	720	360	240	60	120	30
65	1560	780	390	260	65	130	32
70	1680	840	420	280	70	140	35

* - For other offsets, use the following merging taper length formula for L:
For speed of 40 mph or less, $L = WS^2/60$
For speed of 45 mph or more, $L = WS$

Where: L = Taper length in feet
W = Width of offset in feet
S = Posted speed limit, off-peak 85th-percentile speed prior to work starting, or the anticipated operating speed in mph

** - Use for taper and tangent sections where there are no pavement markings or where there is a conflict between existing pavement markings and channelizers (CA).

TABLE 2

LONGITUDINAL BUFFER SPACE AND FLAGGER STATION SPACING

SPEED *	Min D **	DOWNGRADE Min D ***		
		-3%	-6%	-9%
mph	ft	ft	ft	ft
20	115	116	120	126
25	155	158	165	173
30	200	205	215	227
35	250	257	271	287
40	305	315	333	354
45	360	378	400	427
50	425	446	474	507
55	495	520	553	593
60	570	598	638	686
65	645	682	728	785
70	730	771	825	891

* - Speed is posted speed limit, off-peak 85th-percentile speed prior to work starting, or the anticipated operating speed in mph

** - Longitudinal buffer space or flagger station spacing

*** - Use on sustained downgrade steeper than -3 percent and longer than 1 mile.

TABLE 3

ADVANCE WARNING SIGN SPACING

ROAD TYPE	DISTANCE BETWEEN SIGNS *		
	A	B	C
	ft	ft	ft
URBAN - 25 mph OR LESS	100	100	100
URBAN - MORE THAN 25 mph TO 40 mph	250	250	250
URBAN - MORE THAN 40 mph	350	350	350
RURAL	500	500	500
EXPRESSWAY / FREEWAY	1000	1500	2640

* - The distances are approximate, are intended for guidance purposes only, and should be applied with engineering judgment. These distances should be adjusted by the Engineer for field conditions, if necessary, by increasing or decreasing the recommmended distances.

STATE OF CALIFORNIA
DEPARTMENT OF TRANSPORTATION

TRAFFIC CONTROL SYSTEM TABLES FOR LANE AND RAMP CLOSURES

NO SCALE

RSP T9 DATED JULY 19, 2013 SUPERSEDES RSP T9 DATED APRIL 19, 2013 THAT SUPPLEMENTS THE STANDARD PLANS BOOK DATED 2010.

REVISED STANDARD PLAN RSP T9

4-30-13

Dist	COUNTY	ROUTE	POST MILES TOTAL PROJECT	SHEET No.	TOTAL SHEETS
07	LA	1	2.4/7.2	173	200

REGISTERED CIVIL ENGINEER

April 19, 2013
PLANS APPROVAL DATE

REGISTERED PROFESSIONAL ENGINEER
Gurinderpal Bhullar
No. C48815
Exp. 9-30-14
CIVIL
STATE OF CALIFORNIA

THE STATE OF CALIFORNIA OR ITS OFFICERS OR AGENTS SHALL NOT BE RESPONSIBLE FOR THE ACCURACY OR COMPLETENESS OF SCANNED COPIES OF THIS PLAN SHEET.

TO ACCOMPANY PLANS DATED 6-30-16

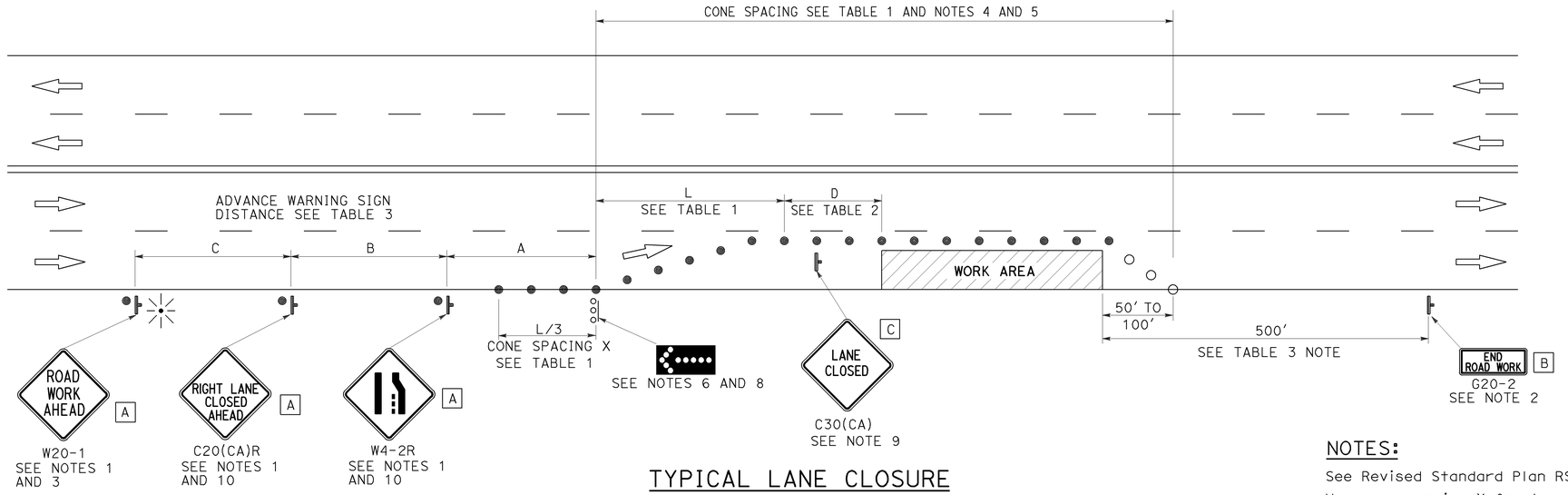

TYPICAL LANE CLOSURE

NOTES:

See Revised Standard Plan RSP T9 for tables.

Use cone spacing X for taper segment, Y for tangent segment or Z for conflict situations, as approriate, per Table 1, unless X, Y, or Z cone spacing is shown on this sheet.

Unless otherwise specified in the special provisions, all temporary warning signs shall have black legend on fluorescent orange background.

California codes are designated by (CA). Otherwise, Federal (MUTCD) codes are shown.

NOTES:

1. Each advance warning sign shall be equipped with at least two flags for daytime closure. Each flag shall be at least 16" x 16" in size and shall be orange or fluorescent red-orange in color. Flashing beacons shall be placed at the locations indicated for lane closure during hours of darkness.
2. A G20-2 "END ROAD WORK" sign, as appropriate, shall be placed at the end of the lane closure unless the end of work area is obvious, or ends within a larger project's limits.
3. If the W20-1 sign would follow within 2000' of a stationary W20-1 or G20-1 "ROAD WORK NEXT _____ MILES", use a C20(CA) sign for the first advance warning sign.
4. All cones used for lane closures during the hours of darkness shall be fitted with retroreflective bands (or sleeves) as specified in the specifications.
5. Portable delineators, placed at one-half the spacing indicated for traffic cones, may be used instead of cones for daytime closures only.
6. Flashing arrow sign shall be either Type I or Type II.
7. For approach speeds over 50 mph, use the "Traffic Control System for Lane Closure On Freeways And Expressways" plan for lane closure details and requirements.
8. A minimum 1500' of sight distance shall be provided where possible for vehicles approaching the first flashing arrow sign. Lane closures shall not begin at the top of crest vertical curve or on a horizontal curve.
9. Place a C30(CA) sign every 2000' throughout length of lane closure.
10. Median lane closures shall conform to the details as shown except that C20(CA)L and W4-2L signs shall be used.
11. At least one person shall be assigned to provide full time maintenance of traffic control devices for lane closure unless, otherwise directed by the Engineer.

LEGEND

- TRAFFIC CONE
- TRAFFIC CONE (OPTIONAL TAPER)
- TEMPORARY TRAFFIC CONTROL SIGN
- FLASHING ARROW SIGN (FAS)
- FAS SUPPORT OR TRAILER
- PORTABLE FLASHING BEACON

SIGN PANEL SIZE (Min)

A	48" x 48"
B	36" x 18"
C	30" x 30"

STATE OF CALIFORNIA
DEPARTMENT OF TRANSPORTATION

TRAFFIC CONTROL SYSTEM FOR LANE CLOSURE ON MULTILANE CONVENTIONAL HIGHWAYS

NO SCALE

RSP T11 DATED APRIL 19, 2013 SUPERSEDES STANDARD PLAN T11 DATED MAY 20, 2011 - PAGE 239 OF THE STANDARD PLANS BOOK DATED 2010.

REVISED STANDARD PLAN RSP T11

2010 REVISED STANDARD PLAN RSP T11

4-2-13

Dist	COUNTY	ROUTE	POST MILES TOTAL PROJECT	SHEET No.	TOTAL SHEETS
07	LA	1	2.4/7.2	174	200

Theresa Gabriel
REGISTERED ELECTRICAL ENGINEER

October 30, 2015
PLANS APPROVAL DATE

REGISTERED PROFESSIONAL ENGINEER
Theresa Aziz Gabriel
No. E15129
Exp. 6-30-16
ELECTRICAL
STATE OF CALIFORNIA

THE STATE OF CALIFORNIA OR ITS OFFICERS OR AGENTS SHALL NOT BE RESPONSIBLE FOR THE ACCURACY OR COMPLETENESS OF SCANNED COPIES OF THIS PLAN SHEET.

TO ACCOMPANY PLANS DATED 6-30-16

LEGEND:

- AB — ABANDON. IF APPLIED TO CONDUIT, REMOVE CONDUCTORS
- BC — INSTALL PULL BOX IN EXISTING CONDUIT RUN
- BP — PEDESTRIAN BARRICADE, TYPE AS INDICATED ON PLAN
- CB — INSTALL CONDUIT INTO EXISTING PULL BOX
- CC — CONNECT NEW AND EXISTING CONDUIT. REMOVE EXISTING CONDUCTORS AND INSTALL CONDUCTORS AS INDICATED
- CF — CONDUIT TO REMAIN FOR FUTURE USE. REMOVE CONDUCTORS. INSTALL PULL TAPE
- DH — DETECTOR HANDHOLE
- FA — FOUNDATION TO BE ABANDONED
- IS — INSTALL SIGN ON SIGNAL MAST ARM
- NS — NO SLIP BASE ON STANDARD
- PEC — PHOTOELECTRIC CONTROL
- PEU — PHOTOELECTRIC UNIT
- RC — EQUIPMENT OR MATERIAL TO BE REMOVED AND BECOME THE PROPERTY OF THE CONTRACTOR
- RE — REMOVE ELECTROLIER, FUSES AND BALLAST. TAPE ENDS OF CONDUCTORS
- RL — RELOCATE EQUIPMENT
- RR — REMOVE AND REUSE EQUIPMENT
- RS — REMOVE AND SALVAGE EQUIPMENT
- SC — SPLICE NEW TO EXISTING CONDUCTORS
- SD — SERVICE DISCONNECT
- TSP — TELEPHONE SERVICE POINT

ABBREVIATIONS

AC+	UNDERGROUNDED CONDUCTOR
APS	ACCESSIBLE PEDESTRIAN SIGNAL
Batt	BATTERY
BBS	BATTERY BACKUP SYSTEM
BC	BOLT CIRCLE
Blk	BLACK
BP	BYPASS
BPB	BICYCLE PUSH BUTTON
C	CONDUIT
CB	CIRCUIT BREAKER
CCTV	CLOSED CIRCUIT TELEVISION
Ckt	CIRCUIT
CMS	CHANGEABLE MESSAGE SIGN
Ctid	CALTRANS IDENTIFICATION
Comm	COMMUNICATION
Cntl	CONTROL
DF	DEPARTMENT-FURNISHED
DLC	LOOP DETECTOR LEAD-IN CABLE
EMS	EXTINGUISHABLE MESSAGE SIGN
EVUC	EMERGENCY VEHICLE UNIT CABLE
EVUD	EMERGENCY VEHICLE UNIT DETECTOR
FB	FLASHING BEACON
FBCA	FLASHING BEACON CONTROL ASSEMBLY
FBS	FLASHING BEACON WITH SLIP BASE
FO	FIBER OPTIC
G	EQUIPMENT GROUNDING CONDUCTOR
GB	GROUND BUS
GFCI	GROUND FAULT CIRCUIT INTERRUPTER
Grn	GREEN
HAR	HIGHWAY ADVISORY RADIO
Hex	HEXAGONAL
HPS	HIGH PRESSURE SODIUM
IISNS	INTERNALLY ILLUMINATED STREET NAME SIGN
ISL	INDUCTION SIGN LIGHTING
LED	LIGHT EMITTING DIODE
LMA	LUMINAIRE MAST ARM
LPS	LOW PRESSURE SODIUM
Ltg	LIGHTING
Lum	LUMINAIRE
M	METERED
MAT	MAST ARM MOUNTING TOP ATTACHMENT
MAS	MAST ARM MOUNTING SIDE ATTACHMENT
MBPS	MANUAL BYPASS SWITCH
M/M	MULTIPLE TO MULTIPLE TRANSFORMER
Mtg	MOUNTING
MV	MERCURY VAPOR LIGHTING FIXTURE
MVDS	MICROWAVE VEHICLE DETECTION SYSTEM
N	NEUTRAL (GROUNDED CONDUCTOR)
NB	NEUTRAL BUS
NC	NORMALLY CLOSE
NO	NORMALLY OPEN
P	CIRCUIT BREAKER'S POLE
PB	PULL BOX
PBA	PUSH BUTTON ASSEMBLY
PEC	PHOTOELECTRIC CONTROL
Ped	PEDESTRIAN
PEU	PHOTOELECTRIC UNIT
PT	CONDUIT WITH PULL TAPE
PTR	POWER TRANSFER RELAY
RE	RELOCATED EQUIPMENT
RM	RAMP METERING
RWIS	ROADSIDE WEATHER INFORMATION SYSTEM
SB	SLIP BASE
SIC	SIGNAL INTERCONNECT CABLE
Sig	SIGNAL
SMA	SIGNAL MAST ARM
SNS	STREET NAME SIGN
SP	SERVICE POINT
TB	TERMINAL BOARD
TDC	TELEPHONE DEMARCATION CABINET
Temp	TEMPERATURE
TMS	TRAFFIC MONITORING STATION
TOS	TRAFFIC OPERATIONS SYSTEM
UPS	UNINTERRUPTABLE POWER SUPPLY
UPSC	UNINTERRUPTABLE POWER SUPPLY CONTROLLER
Veh	VEHICLE
VIVDS	VIDEO IMAGE VEHICLE DETECTION SYSTEM
Wht	WHITE
WIM	WEIGH-IN-MOTION
Xfmr	TRANSFORMER

SOFFIT AND WALL-MOUNTED LUMINAIRES

- PENDANT SOFFIT LUMINAIRE, 70 W HPS UNLESS OTHERWISE SPECIFIED
- FLUSH-MOUNTED SOFFIT LUMINAIRE, 70 W HPS UNLESS OTHERWISE SPECIFIED
- WALL-MOUNTED LUMINAIRE, 70 W HPS UNLESS OTHERWISE SPECIFIED
- EXISTING SOFFIT OR WALL-MOUNTED LUMINAIRE TO REMAIN UNMODIFIED
- EXISTING SOFFIT OR WALL-MOUNTED LUMINAIRE TO BE MODIFIED AS SPECIFIED

NOTE:
Arrow indicates "street side" of luminaire.

COMMONLY USED SYMBOLS FOR UNITED STATES CUSTOMARY UNITS OF MEASUREMENT:

SYMBOL	DEFINITIONS
Ω	OHMS
min	MINUTE
s	SECOND
bps	BITS PER SECOND
Bps	BYTES PER SECOND
A	AMPERE
V	VOLT
$V_{(dc)}$	VOLT (DIRECT CURRENT)
$V_{(ac)}$	VOLT (ALTERNATING CURRENT)
FC	FOOT - CANDLE
W	WATTS
VA	VOLT-AMPERE
M	MEGA
k	KILO
m	MILLI
μ	MICRO
P	PICO
Hz	HERTZ

MISCELLANEOUS ELECTROLIERS

NEW	EXISTING	
		LUMINAIRE ON WOOD POLE
		NON-STANDARD ELECTROLIER (SEE PROJECT LEGEND)
		CITY ELECTROLIER
		ELECTROLIER FOUNDATION (FUTURE INSTALLATION)

NOTES:

1. LED luminaires shall be 235 W when installed on Type 21, 21D, 30, 31 and 32 Standards, unless otherwise specified. LED luminaires shall be 165 W when installed on other type standards or poles, unless otherwise specified.
2. Luminaires shall be the cutoff type, ANSI Type III medium cutoff lighting distribution, unless otherwise specified.

STANDARD ELECTROLIER

NEW	EXISTING	STANDARD TYPE
		15
		15D
		15 STRUCTURE
		15D STRUCTURE
		21
		21D
		21 STRUCTURE
		21D STRUCTURE
		30
		31
		32

STATE OF CALIFORNIA
DEPARTMENT OF TRANSPORTATION

ELECTRICAL SYSTEMS (LEGEND AND ABBREVIATIONS)

NO SCALE

RSP ES-1A DATED OCTOBER 30, 2015 SUPERSEDES RSP ES-1A DATED JULY 19, 2013 AND STANDARD PLAN ES-1A DATED MAY 20, 2011 - PAGE 425 OF THE STANDARD PLANS BOOK DATED 2010.

REVISED STANDARD PLAN RSP ES-1A

2010 REVISED STANDARD PLAN RSP ES-1A

9-29-15

Dist	COUNTY	ROUTE	POST MILES TOTAL PROJECT	SHEET No.	TOTAL SHEETS
07	LA	1	2.4/7.2	175	200

Theresa Gabriel
REGISTERED ELECTRICAL ENGINEER

October 30, 2015
PLANS APPROVAL DATE

REGISTERED PROFESSIONAL ENGINEER
Theresa Aziz Gabriel
No. E15129
Exp. 6-30-16
ELECTRICAL
STATE OF CALIFORNIA

THE STATE OF CALIFORNIA OR ITS OFFICERS OR AGENTS SHALL NOT BE RESPONSIBLE FOR THE ACCURACY OR COMPLETENESS OF SCANNED COPIES OF THIS PLAN SHEET.

TO ACCOMPANY PLANS DATED 6-30-16

CONDUIT

NEW	EXISTING	
		LIGHTING CONDUIT, UNLESS OTHERWISE INDICATED OR NOTED
		TRAFFIC SIGNAL CONDUIT
C	c	COMMUNICATION CONDUIT
T	t	TELEPHONE CONDUIT
F	f	FIRE ALARM CONDUIT
FO	fo	FIBER OPTIC CONDUIT
		CONDUIT TERMINATION
R	r	CONDUIT RISER ATTACHED TO THE STRUCTURE OR SERVICE POLE

SERVICE EQUIPMENT

NEW	EXISTING	
OH	oh	OVERHEAD LINES
U	U	WOOD POLE, "U" INDICATES UTILITY OWNED
		POLE GUY WITH ANCHOR
		UTILITY TRANSFORMER - GROUND MOUNTED
III	III	SERVICE EQUIPMENT ENCLOSURE TYPE. DOOR INDICATES FRONT OF ENCLOSURE
T	T	TELEPHONE DEMARCATION CABINET

POLE-MOUNTED SERVICE DESIGNATION

TYPE H SERVICE, 28'-10" — TYPE OF INSTALLATION AND POLE HEIGHT ABOVE GRADE

FLASHING BEACON

NEW	EXISTING	
R	R	FLASHING BEACON (ONE VEHICLE SIGNAL HEAD WITH BACKPLATE AND VISOR) "R" INDICATES RED INDICATION, "Y" INDICATES YELLOW INDICATION
Y Y	Y Y	FLASHING BEACON WITH TYPE 15-FBS STANDARD AND A SIGN.
R R	R R	FLASHING BEACON WITH TYPES 9, 9A OR 9B SIGN UNLESS OTHERWISE SPECIFIED OR INDICATED

SIGNAL EQUIPMENT

NEW	EXISTING	
		PEDESTRIAN SIGNAL HEAD
		PUSH BUTTON ASSEMBLY POST
		PEDESTRIAN BARRICADE
		VEHICLE SIGNAL HEAD (WITH BACKPLATE AND 3-SECTIONS: RED, YELLOW AND GREEN)
		VEHICLE SIGNAL HEAD WITH ANGLE VISOR
PV	PV	MODIFICATIONS OF BASIC SYMBOL: "L" INDICATES ALL NON-ARROW SECTIONS LOUVERED "LG" INDICATES LOUVERED GREEN SECTION ONLY "PV" INDICATES ALL 12" SECTIONS PROGRAMMED VISIBILITY "8" INDICATES ALL 8" SECTIONS (ONLY WHEN SPECIFIED)
		VEHICLE SIGNAL HEAD CONSISTING OF RED, YELLOW AND GREEN LEFT ARROW SECTIONS
		VEHICLE SIGNAL HEAD CONSISTING OF RED AND YELLOW SECTIONS WITH AN UP GREEN ARROW SECTION
		VEHICLE SIGNAL HEAD (5 SECTION) CONSISTING OF RED, YELLOW AND GREEN SECTIONS WITH YELLOW AND GREEN RIGHT ARROW SECTIONS
		TYPE 15TS STANDARD WITH VEHICLE SIGNAL HEAD AND LUMINAIRE
		TYPE 21TS STANDARD WITH VEHICLE SIGNAL HEAD AND LUMINAIRE
		STANDARD WITH LUMINAIRE AND SIGNAL MAST ARMS AND ATTACHED VEHICLE SIGNAL HEADS
		TYPE 1 STANDARD WITH ATTACHED VEHICLE SIGNAL HEADS
		STANDARD WITH A SIGNAL MAST ARM, ATTACHED VEHICLE SIGNAL HEADS AND INTERNALLY ILLUMINATED STREET NAME SIGN
		CONTROLLER ASSEMBLY. DOOR INDICATES FRONT OF CABINET

SIGNAL EQUIPMENT Cont

NEW	EXISTING	
		GUARD POST
		TYPE 1 STANDARD WITH RAMP METERING SIGN
		OPTICAL DETECTOR FOR THE EMERGENCY VEHICLE DETECTION

NOTES:

1. All signal sections shall be 12" unless shown otherwise.
2. Signal heads shall be provided with backplates unless shown otherwise.

ILLUMINATED OVERHEAD SIGN

NEW	EXISTING	
		SINGLE POST, SINGLE ILLUMINATED SIGN, BALANCED BUTTERFLY
		SINGLE POST, DOUBLE ILLUMINATED SIGN, BALANCED BUTTERFLY
		SINGLE POST, SINGLE ILLUMINATED SIGN, FULL CANTILEVER
		DOUBLE POST, SINGLE ILLUMINATED SIGN
		SINGLE ILLUMINATED SIGN MOUNTED ON STRUCTURE
		DOUBLE POST, SINGLE ILLUMINATED SIGN WITH ELECTROLIER

STATE OF CALIFORNIA
DEPARTMENT OF TRANSPORTATION

ELECTRICAL SYSTEMS (LEGEND AND ABBREVIATIONS)

NO SCALE

RSP ES-1B DATED OCTOBER 30, 2015 SUPERSEDES RSP ES-1B DATED JULY 19, 2013 AND STANDARD PLAN ES-1B DATED MAY 20, 2011 - PAGE 426 OF THE STANDARD PLANS BOOK DATED 2010.

REVISED STANDARD PLAN RSP ES-1B

2010 REVISED STANDARD PLAN RSP ES-1B

8-19-15

Dist	COUNTY	ROUTE	POST MILES TOTAL PROJECT	SHEET No.	TOTAL SHEETS
07	LA	1	2.4/7.2	176	200

Theresa Gabriel
REGISTERED ELECTRICAL ENGINEER

April 15, 2016
PLANS APPROVAL DATE

REGISTERED PROFESSIONAL ENGINEER Theresa Aziz Gabriel No. E15129 Exp. 6-30-16 ELECTRICAL STATE OF CALIFORNIA

THE STATE OF CALIFORNIA OR ITS OFFICERS OR AGENTS SHALL NOT BE RESPONSIBLE FOR THE ACCURACY OR COMPLETENESS OF SCANNED COPIES OF THIS PLAN SHEET.

TO ACCOMPANY PLANS DATED 6-30-16

EQUIPMENT IDENTIFICATION

ILLUMINATED SIGN IDENTIFICATION:

SIGN No. 12345 — SIGN EQUIPMENT IDENTIFICATION CHARACTERS - PLACE ON POST OR STRUCTURE

10 ISL SCI 1.0

- 10 — TRANSFORMER RATING (kVA)
- SCI — LIGHTING CONTROL TYPE
- ISL — NUMBER AND TYPE OF FIXTURES

DO NOT PLACE ON STANDARD OR STRUCTURE

ELECTROLIER OR EQUIPMENT IDENTIFICATION:

L2745 - 15'-0"

- 15'-0" — MAST ARM LENGTH, IF SHOWN. DO NOT PLACE ON STANDARD OR STRUCTURE
- L2745 — EQUIPMENT IDENTIFICATION CHARACTERS - PLACE ON STANDARD OR STRUCTURE. EXISTING EQUIPMENT IDENTIFICATION CHARACTERS ARE SHOWN IN PARENTHESIS

CONDUIT AND CONDUCTOR IDENTIFICATION:

1½"C, 2#10, 15#14, 2 DLC, 12P#18 (PAIR)

- 2#10, 15#14, 2 DLC, 12P#18 — NUMBER AND SIZE OF CONDUCTORS AND CABLES
- 1½"C — SIZE OF CONDUIT IN INCHES

ø1, ø2, ø2P, etc.	TRAFFIC PHASE IDENTIFICATION FOR SIGNALS, DETECTORS AND PHASE DIAGRAMS
1 2 3	LEGEND NUMBERS
A B C	EQUIPMENT, SIGNAL POLES, INSTALLATION OR ITEMS
1 2 3	CONDUIT RUN NUMBERS

SIGNAL AND LIGHTING STANDARD (TYPICAL DESIGNATION):

19A - 3 - 100

- 100 — WIND VELOCITY = 100 mph
- 3 — CASE 3 ARM LOADING
- 19A — STANDARD TYPE
- STANDARD PLAN SHEET NUMBER
- DETAIL, NUMBER, SECTION, TYPE OR ELEVATION

MISCELLANEOUS EQUIPMENT

NEW	EXISTING	
CMS	cms	CHANGEABLE MESSAGE SIGN
		CLOSED CIRCUIT TELEVISION CAMERA
		HIGHWAY ADVISORY RADIO POLE AND ANTENNA
EMS	ems	LED EXTINGUISHABLE MESSAGE SIGN
M V	m v	DETECTION DEVICE M = MICROWAVE SENSOR V = VIDEO IMAGE SENSOR

WIRING DIAGRAM LEGEND

- EXTERNAL CONDUCTOR
- CONDUCTOR OR BUS
- TIE POINT
- CONTACTOR COIL
- CONTACTOR, NO CONTACT
- TERMINAL BLOCKS
- CONTACTOR, NC CONTACT
- ENCLOSURE BOND
- GROUNDING ELECTRODE
- CIRCUIT BREAKER
- RECEPTACLE

PULL BOXES

NEW	EXISTING	
		PULL BOX, No. 5 UNLESS OTHERWISE INDICATED OR NOTED
3	9A(21)	PULL BOX, ADDITIONAL DESIGNATIONS OR DESCRIPTIONS

3 No. 3½ PULL BOX
5 No. 5 PULL BOX
6 No. 6 PULL BOX
7 No. 7 PULL BOX (CEILING)
8 No. 8 PULL BOX
9 No. 9 PULL BOX (STRUCTURE)
9A No. 9A PULL BOX (STRUCTURE)

(C) COMMUNICATIONS PULL BOX
(E) PULL BOX WITH EXTENSION
(S) SPRINKLER CONTROL PULL BOX
(21) ANCHOR BOLTS AND CONDUIT FOR FUTURE INSTALLATION OF TYPE 21 STANDARD
(T) TRAFFIC PULL BOX

VEHICLE DETECTORS

5 J 9 U

- 9 — VEHICLE DETECTOR DESIGNATION
- U — U = UPPER, L = LOWER
- 9 — SLOT NUMBER IN INPUT FILE
- J — INPUT FILE (I OR J)
- 5 — PHASE

NEW	EXISTING	
		TYPE A LOOP DETECTOR. OUTLINE OF SAW CUT SHOWN
		TYPE B LOOP DETECTOR. OUTLINE OF SAW CUT SHOWN
		TYPE C LOOP DETECTOR. OUTLINE OF SAW CUT SHOWN
		TYPE D LOOP DETECTOR. OUTLINE OF SAW CUT SHOWN
		TYPE E LOOP DETECTOR. OUTLINE OF SAW CUT SHOWN
		TYPE Q LOOP DETECTOR. OUTLINE OF SAW CUT SHOWN
DH	dh	DETECTOR HANDHOLE
		MICROWAVE OR VIDEO DETECTION ZONE

STATE OF CALIFORNIA
DEPARTMENT OF TRANSPORTATION

ELECTRICAL SYSTEMS (LEGEND AND ABBREVIATIONS)

NO SCALE

RSP ES-1C DATED APRIL 15, 2016 SUPERSEDES RSP ES-1C DATED OCTOBER 30, 2015 AND RSP ES-1C DATED JULY 19, 2013 AND STANDARD PLAN ES-1C DATED MAY 20, 2011 - PAGE 427 OF THE STANDARD PLANS BOOK DATED 2010.

REVISED STANDARD PLAN RSP ES-1C

2010 REVISED STANDARD PLAN RSP ES-1C

1-22-16

Dist	COUNTY	ROUTE	POST MILES TOTAL PROJECT	SHEET No.	TOTAL SHEETS
07	LA	1	2.4/7.2	177	200

Theresa Gabriel
REGISTERED ELECTRICAL ENGINEER

October 30, 2015
PLANS APPROVAL DATE

REGISTERED PROFESSIONAL ENGINEER
Theresa Aziz Gabriel
No. E15129
Exp. 6-30-16
ELECTRICAL
STATE OF CALIFORNIA

THE STATE OF CALIFORNIA OR ITS OFFICERS OR AGENTS SHALL NOT BE RESPONSIBLE FOR THE ACCURACY OR COMPLETENESS OF SCANNED COPIES OF THIS PLAN SHEET.

TO ACCOMPANY PLANS DATED 6-30-16

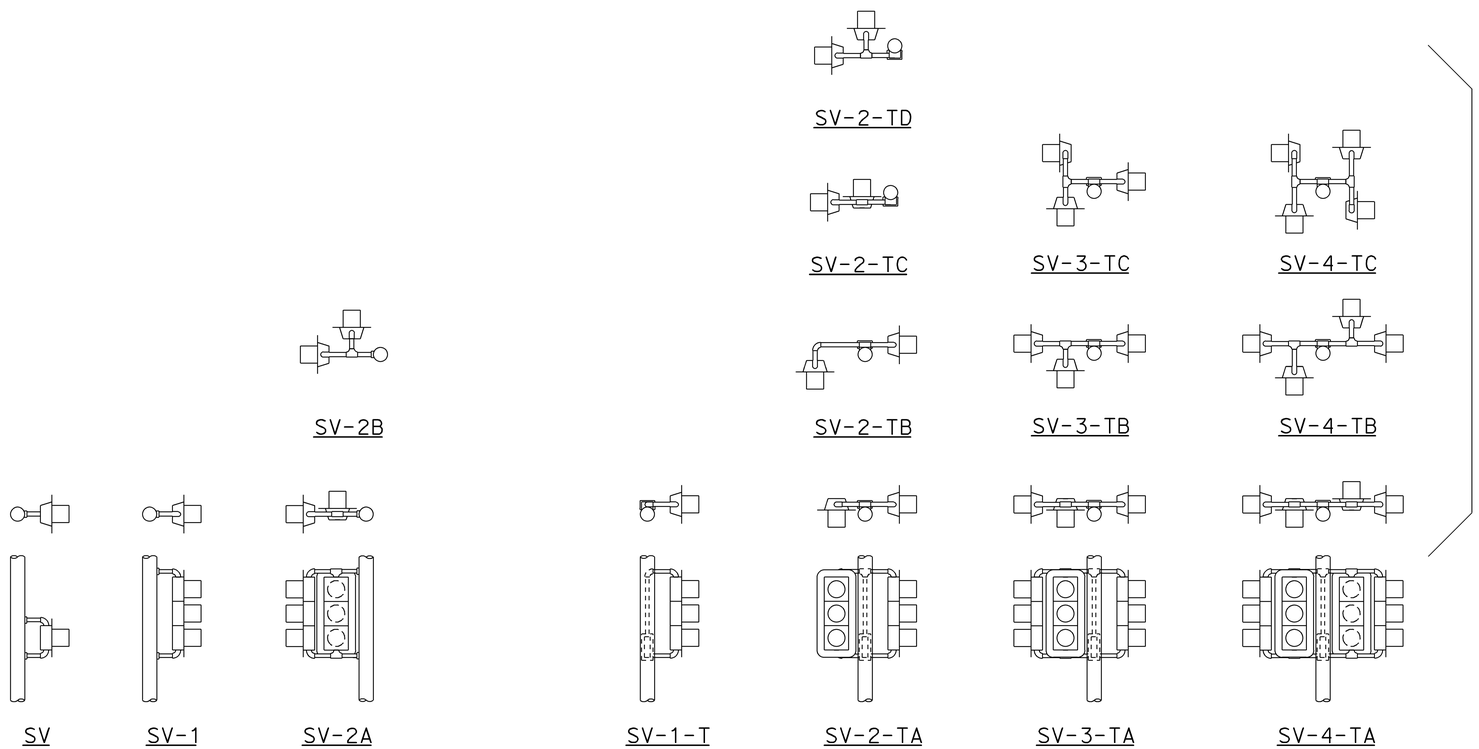

SIDE MOUNTINGS

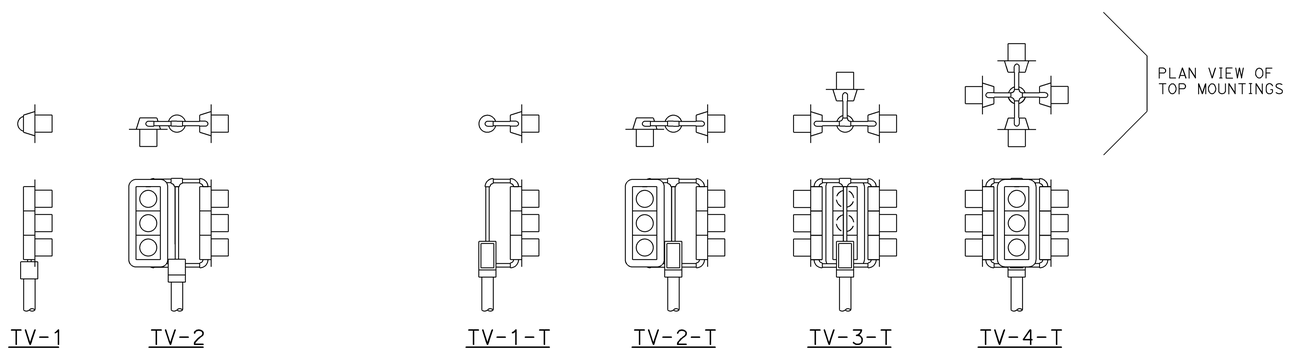

TOP MOUNTINGS

ABBREVIATIONS:

SV	SIDE MOUNTED SIGNAL HEADS
T	TERMINAL COMPARTMENT
TV	TOP MOUNTED SIGNAL HEADS
1, 2, 3, 4	NUMBER OF SIGNAL FACES (3 - SECTION, UNLESS OTHERWISE INDICATED)
A, B, C, D	CONFIGURATION OF SIGNALS

NOTES:

1. Mountings shall be oriented to provide maximum horizontal clearance to adjacent roadway.
2. Bracket arms shall be long enough to permit proper alignment of signals and backplate installation.
3. See Revised Standard Plans RSP ES-4D and RSP ES-4E for attachment fitting details.

STATE OF CALIFORNIA
DEPARTMENT OF TRANSPORTATION

ELECTRICAL SYSTEMS (SIGNAL HEADS AND MOUNTINGS)

NO SCALE

RSP ES-4A DATED OCTOBER 30, 2015 SUPERSEDES RSP ES-4A DATED JULY 19, 2013 AND STANDARD PLAN ES-4A DATED MAY 20, 2011 - PAGE 443 OF THE STANDARD PLANS BOOK DATED 2010.

REVISED STANDARD PLAN RSP ES-4A

2010 REVISED STANDARD PLAN RSP ES-4A

9-28-15

Dist	COUNTY	ROUTE	POST MILES TOTAL PROJECT	SHEET No.	TOTAL SHEETS
07	LA	1	2.4/7.2	178	200

Theresa Gabriel
REGISTERED ELECTRICAL ENGINEER

October 30, 2015
PLANS APPROVAL DATE

REGISTERED PROFESSIONAL ENGINEER
Theresa Aziz Gabriel
No. E15129
Exp. 6-30-16
ELECTRICAL
STATE OF CALIFORNIA

THE STATE OF CALIFORNIA OR ITS OFFICERS OR AGENTS SHALL NOT BE RESPONSIBLE FOR THE ACCURACY OR COMPLETENESS OF SCANNED COPIES OF THIS PLAN SHEET.

TO ACCOMPANY PLANS DATED 6-30-16

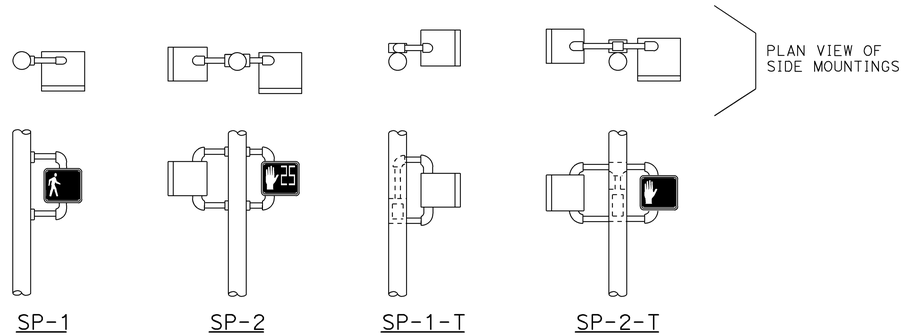

SIDE MOUNTINGS

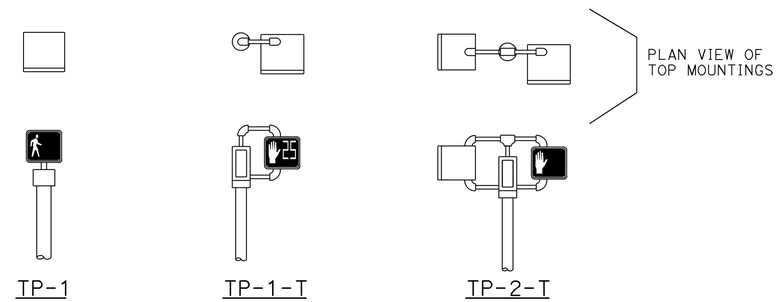

TOP MOUNTINGS

PEDESTRIAN SIGNAL HEAD MOUNTINGS
DETAIL A

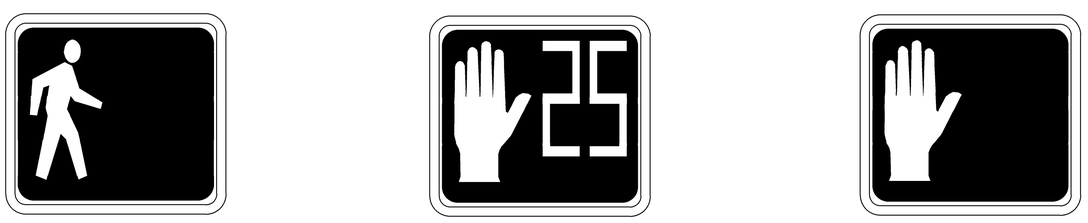

PERSON WALKING INTERVAL FLASHING UPRAISED HAND INTERVAL STEADY UPRAISED HAND INTERVAL

LED COUNTDOWN PEDESTRIAN SIGNAL FACE MODULE
DETAIL B

NOTES:

1. Mounting shall be oriented to provide maximum horizontal clearance to adjacent roadway.
2. Bracket arms shall be long enough to permit proper alignment of signals.
3. See Revised Standard Plan RSP ES-4D for attachment fittings details.

ABBREVIATIONS:

1, 2	NUMBER OF SIGNAL FACES
SP	SIDE MOUNTED PEDESTRIAN SIGNAL
T	TERMINAL COMPARTMENT
TP	TOP MOUNTED PEDESTRIAN SIGNAL

STATE OF CALIFORNIA
DEPARTMENT OF TRANSPORTATION

ELECTRICAL SYSTEMS (PEDESTRIAN SIGNAL HEADS)

NO SCALE

RSP ES-4B DATED OCTOBER 30, 2015 SUPERSEDES RSP ES-4B DATED JULY 19, 2013 AND STANDARD PLAN ES-4B DATED MAY 20, 2011 - PAGE 444 OF THE STANDARD PLANS BOOK DATED 2010.

REVISED STANDARD PLAN RSP ES-4B

2010 REVISED STANDARD PLAN RSP ES-4B

9-1-15

Dist	COUNTY	ROUTE	POST MILES TOTAL PROJECT	SHEET No.	TOTAL SHEETS
07	LA	1	2.4/7.2	179	200

Theresa Gabriel
REGISTERED ELECTRICAL ENGINEER

October 30, 2015
PLANS APPROVAL DATE

REGISTERED PROFESSIONAL ENGINEER Theresa Aziz Gabriel No. E15129 Exp. 6-30-16 ELECTRICAL STATE OF CALIFORNIA

THE STATE OF CALIFORNIA OR ITS OFFICERS OR AGENTS SHALL NOT BE RESPONSIBLE FOR THE ACCURACY OR COMPLETENESS OF SCANNED COPIES OF THIS PLAN SHEET.

TO ACCOMPANY PLANS DATED 6-30-16

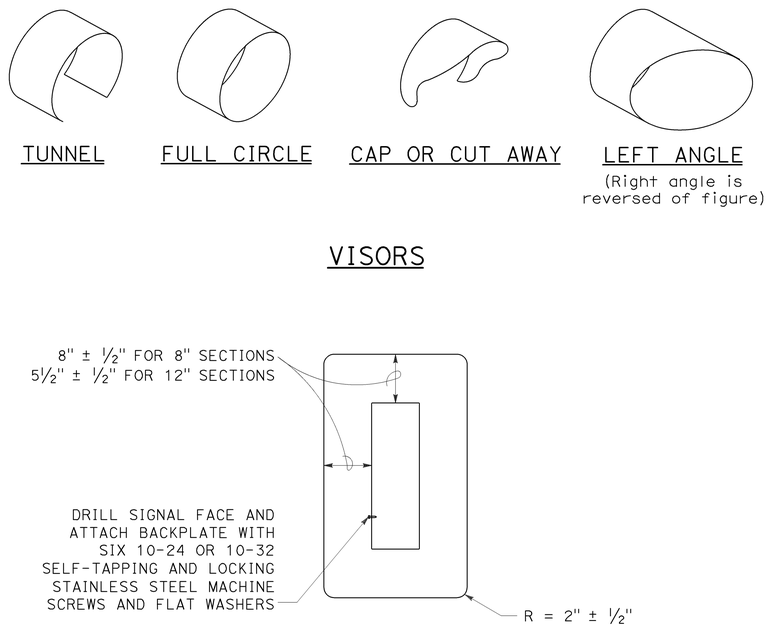

VISORS

8" AND 12" SECTIONS

BACKPLATE

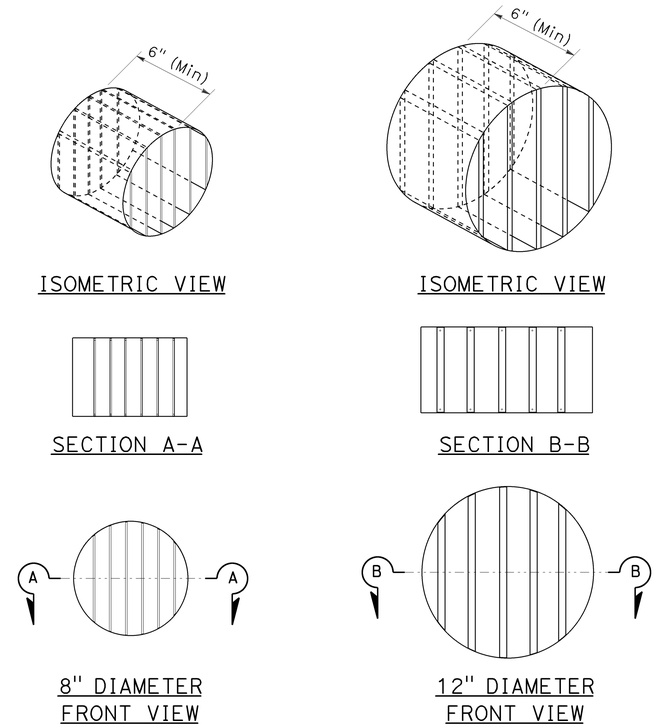

ISOMETRIC VIEW

ISOMETRIC VIEW

SECTION A-A

SECTION B-B

8" DIAMETER FRONT VIEW

12" DIAMETER FRONT VIEW

DIRECTIONAL LOUVER

Directional louvers shall be oriented and secured in place with one plated brass machine screw and nut.

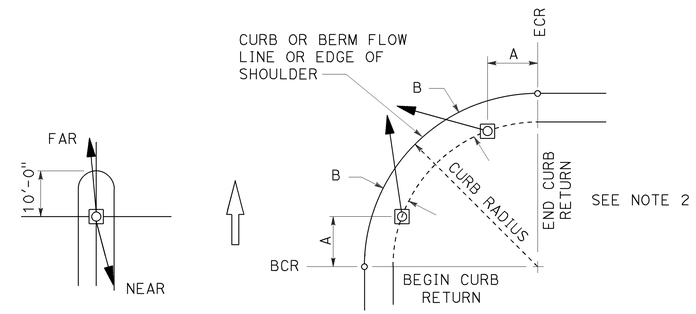

NOTES:

1. Typical signal pole placement unless dimensioned on plans.
2. For A and B dimensions, see Pole Schedule.

SIGNAL STANDARD PLACEMENT DIMENSIONS AND EQUIPMENT LOCATIONS

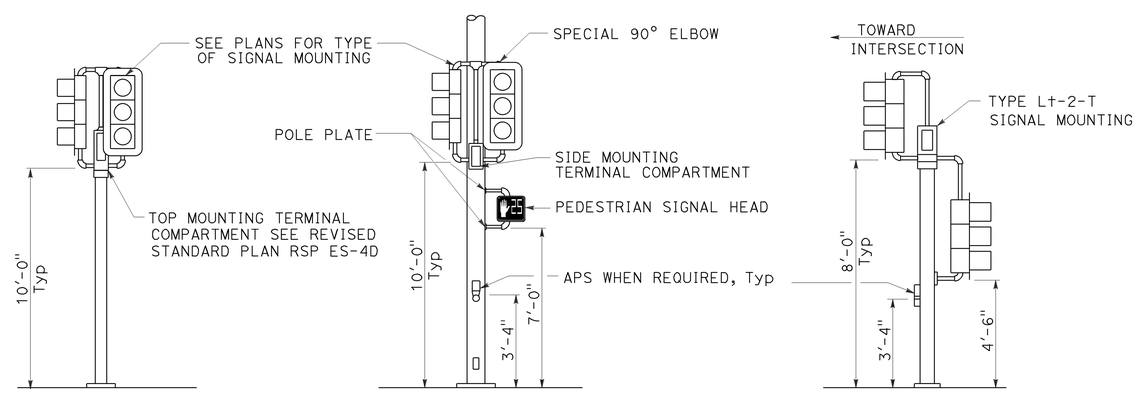

TOP MOUNTED SIGNALS (TV)

Type 1-A, 1-B, 1-C and 1-D standard as indicated on the plans

SIDE MOUNTED SIGNALS (SV AND SP)

Normally used on standards with luminaire or signal mast arm

LEFT TURN LANE SIGNAL

Type 1-A, 1-B, 1-C and 1-D standard as indicated on plans

TYPICAL SIGNAL HEAD INSTALLATIONS

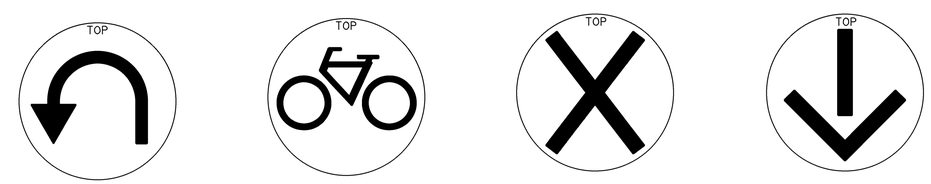

U-TURN

BICYCLE

LANE CONTROL

LANE CONTROL

SIGNAL FACES

STATE OF CALIFORNIA
DEPARTMENT OF TRANSPORTATION

ELECTRICAL SYSTEMS (SIGNAL HEADS AND MOUNTINGS)

NO SCALE

RSP ES-4C DATED OCTOBER 30, 2015 SUPERSEDES RSP ES-4C DATED JULY 19, 2013 AND STANDARD PLAN ES-4C DATED MAY 20, 2011 - PAGE 445 OF THE STANDARD PLANS BOOK DATED 2010.

REVISED STANDARD PLAN RSP ES-4C

2010 REVISED STANDARD PLAN RSP ES-4C

9-28-15

Dist	COUNTY	ROUTE	POST MILES TOTAL PROJECT	SHEET No.	TOTAL SHEETS
07	LA	1	2.4/7.2	180	200

Theresa Gabriel
REGISTERED ELECTRICAL ENGINEER

October 30, 2015
PLANS APPROVAL DATE

REGISTERED PROFESSIONAL ENGINEER Theresa Aziz Gabriel No. E15129 Exp. 6-30-16 ELECTRICAL STATE OF CALIFORNIA

THE STATE OF CALIFORNIA OR ITS OFFICERS OR AGENTS SHALL NOT BE RESPONSIBLE FOR THE ACCURACY OR COMPLETENESS OF SCANNED COPIES OF THIS PLAN SHEET.

TO ACCOMPANY PLANS DATED 6-30-16

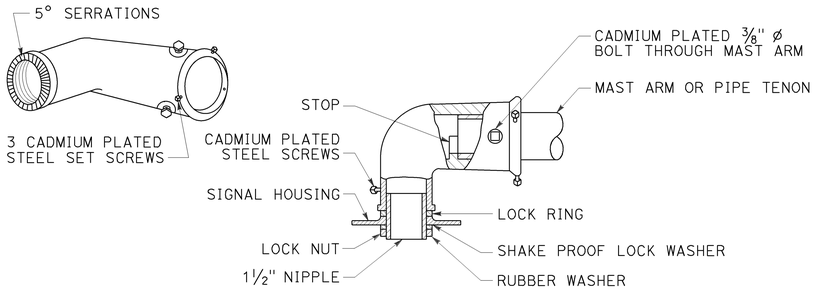

TYPE MAT
MAST ARM MOUNTING
For 2 NPS pipe, see Note 1.

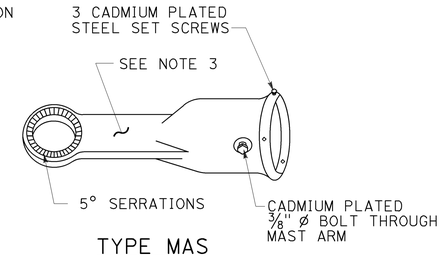

TYPE MAS
MAST ARM MOUNTING
For 2 NPS pipe, see Note 1.

SIGNAL SLIP FITTERS

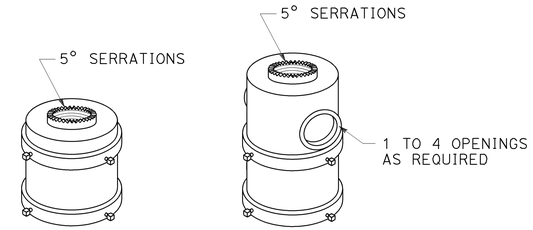

FOR ONE MOUNTING FOR MULTIPLE MOUNTINGS

TOP MOUNTINGS
For 4 NPS pipe, see Note 2.

NOTES:

1. After mast arm signal has been plumbed and secured, drill 7/16" hole through mast arm tenon in line with slip fitter hole. Place a cadmium plated 3/8" Ø galvanized bolt with washer under bolt head through hole and secure with washer, nut, and locknut. Seal openings between mast arm mountings and mast arm with mastic.
2. (A) Threaded top mounted slip fitter openings shall be 1 1/2 NPS.
   (B) Serrations in fittings shall match those on bottom of signal heads or in lock ring.
   (C) Top opening shall be offset when backplate is used.
3. Wireway shall have a cross section area of 0.95 square inch minimum. Minimum width of 1/2".

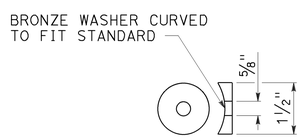

DETAIL C

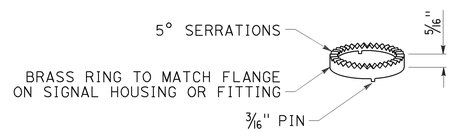

LOCK RING
Use where locking ring is not integral With signal housing or fitting.

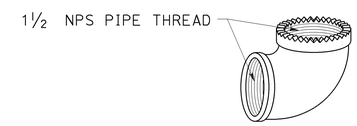

SPECIAL 90° ELBOW
One for each signal head, except those With special slip fitter mounting

MISCELLANEOUS MOUNTING HARDWARE

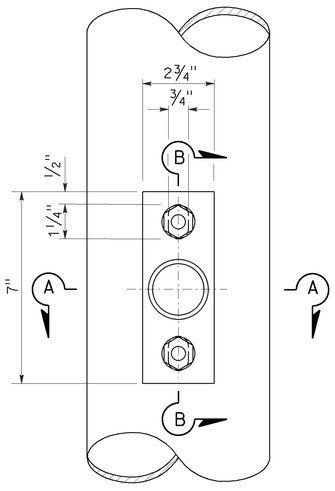

TOP VIEW

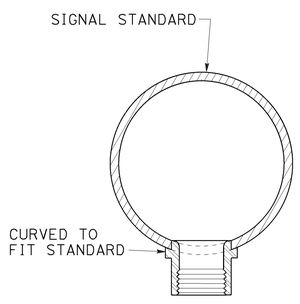

SECTION A-A

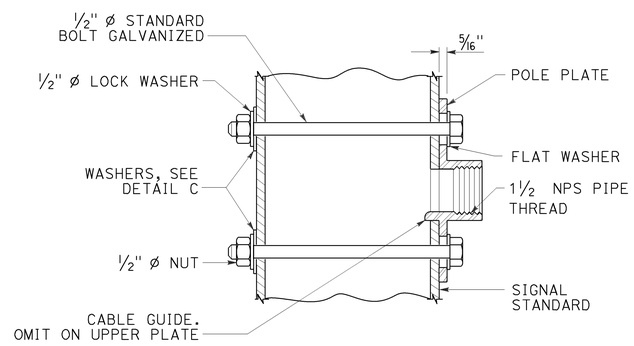

SECTION B-B

POLE PLATE FOR SIDE MOUNTED SIGNAL HEAD
WITHOUT TERMINAL COMPARTMENT

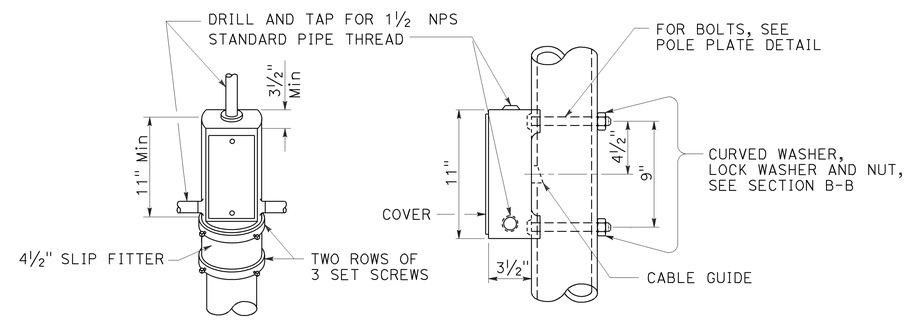

TOP MOUNTING SIDE MOUNTING

TERMINAL COMPARTMENT

STATE OF CALIFORNIA
DEPARTMENT OF TRANSPORTATION

ELECTRICAL SYSTEMS (SIGNAL HEAD MOUNTING)

NO SCALE

RSP ES-4D DATED OCTOBER 30, 2015 SUPERSEDES STANDARD PLAN ES-4D DATED MAY 20, 2011 - PAGE 446 OF THE STANDARD PLANS BOOK DATED 2010.

REVISED STANDARD PLAN RSP ES-4D

2010 REVISED STANDARD PLAN RSP ES-4D

8-20-15

Dist	COUNTY	ROUTE	POST MILES TOTAL PROJECT	SHEET No.	TOTAL SHEETS
07	LA	1	2.4/7.2	181	200

Theresa Gabriel
REGISTERED ELECTRICAL ENGINEER

October 30, 2015
PLANS APPROVAL DATE

REGISTERED PROFESSIONAL ENGINEER
Theresa Aziz Gabriel
No. E15129
Exp. 6-30-16
ELECTRICAL
STATE OF CALIFORNIA

THE STATE OF CALIFORNIA OR ITS OFFICERS OR AGENTS SHALL NOT BE RESPONSIBLE FOR THE ACCURACY OR COMPLETENESS OF SCANNED COPIES OF THIS PLAN SHEET.

TO ACCOMPANY PLANS DATED 6-30-16

2010 REVISED STANDARD PLAN RSP ES-4E

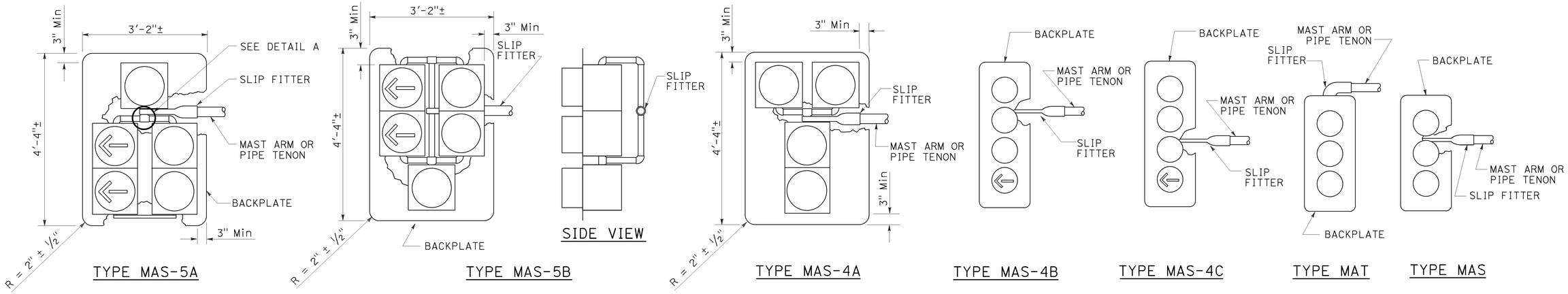

MAST ARM MOUNTINGS

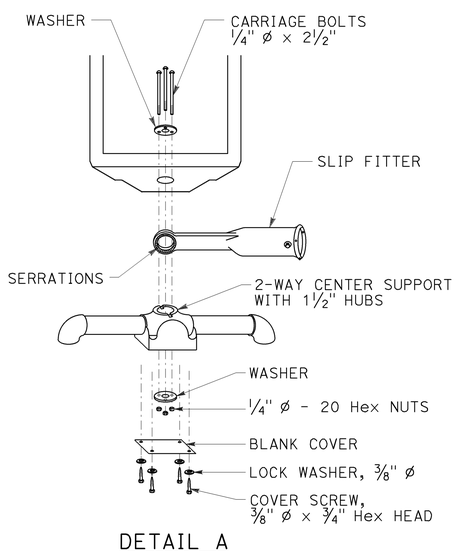

DETAIL A

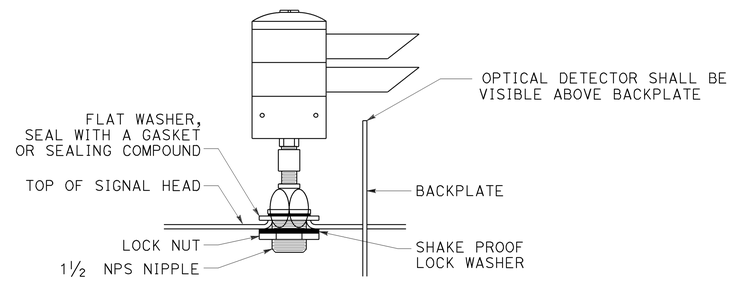

OPTICAL DETECTOR MOUNTING FOR EMERGENCY VEHICLE DETECTION

DETAIL B

STATE OF CALIFORNIA
DEPARTMENT OF TRANSPORTATION

ELECTRICAL SYSTEMS (SIGNAL HEADS AND OPTICAL DETECTOR MOUNTING)

NO SCALE

RSP ES-4E DATED OCTOBER 30, 2015 SUPERSEDES RSP ES-4E DATED JULY 19, 2013 AND STANDARD PLAN ES-4E DATED MAY 20, 2011 - PAGE 447 OF THE STANDARD PLANS BOOK DATED 2010.

REVISED STANDARD PLAN RSP ES-4E

8-19-15

Dist	COUNTY	ROUTE	POST MILES TOTAL PROJECT	SHEET No.	TOTAL SHEETS
07	LA	1	2.4/7.2	182	200

Theresa Gabriel
REGISTERED ELECTRICAL ENGINEER

April 15, 2016
PLANS APPROVAL DATE

REGISTERED PROFESSIONAL ENGINEER
Theresa Aziz Gabriel
No. E15129
Exp. 6-30-16
ELECTRICAL
STATE OF CALIFORNIA

THE STATE OF CALIFORNIA OR ITS OFFICERS OR AGENTS SHALL NOT BE RESPONSIBLE FOR THE ACCURACY OR COMPLETENESS OF SCANNED COPIES OF THIS PLAN SHEET.

TO ACCOMPANY PLANS DATED 6-30-16

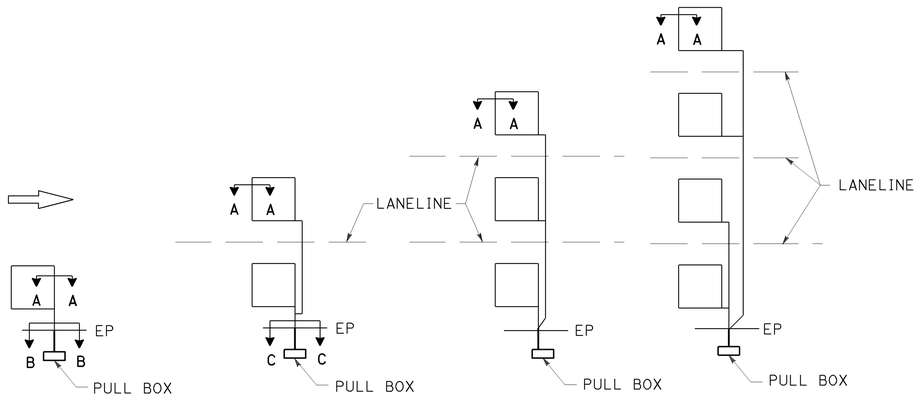

SAW CUT DETAILS

Type A loop detector configurations illustrated

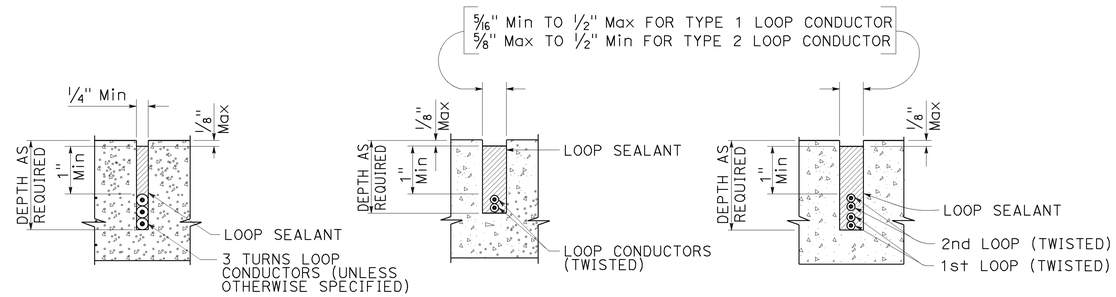

SECTION A-A SECTION B-B SECTION C-C

SLOT DETAILS - TYPE 1 AND TYPE 2 LOOP CONDUCTOR

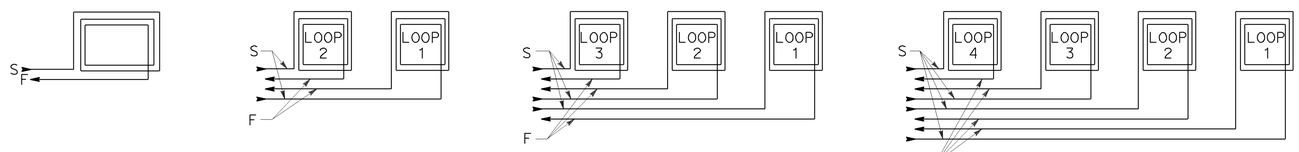

WINDING DETAILS

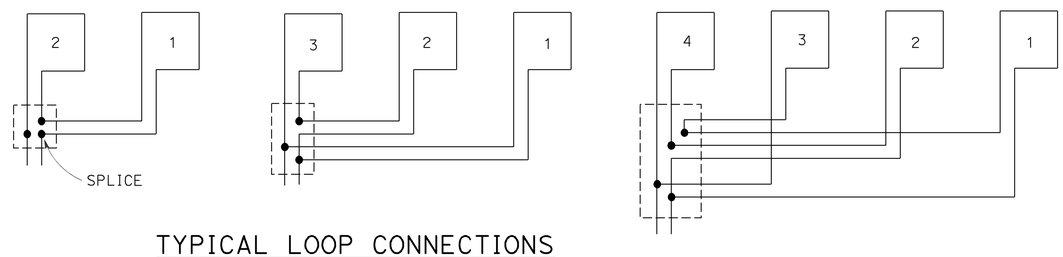

TYPICAL LOOP CONNECTIONS

Dashed lines represent the pull box

ABBREVIATIONS:

S - START
F - FINISH

STATE OF CALIFORNIA
DEPARTMENT OF TRANSPORTATION

ELECTRICAL SYSTEMS (LOOP DETECTORS)

NO SCALE

RSP ES-5A DATED APRIL 15, 2016 SUPERSEDES RSP ES-5A DATED OCTOBER 30, 2015 AND STANDARD PLAN ES-5A DATED MAY 20, 2011 - PAGE 448 OF THE STANDARD PLANS BOOK DATED 2010.

REVISED STANDARD PLAN RSP ES-5A

2010 REVISED STANDARD PLAN RSP ES-5A

1-12-16

Dist	COUNTY	ROUTE	POST MILES TOTAL PROJECT	SHEET No.	TOTAL SHEETS
07	LA	1	2.4/7.2	183	200

Theresa Gabriel
REGISTERED ELECTRICAL ENGINEER

April 15, 2016
PLANS APPROVAL DATE

REGISTERED PROFESSIONAL ENGINEER Theresa Aziz Gabriel No. E15129 Exp. 6-30-16 ELECTRICAL STATE OF CALIFORNIA

THE STATE OF CALIFORNIA OR ITS OFFICERS OR AGENTS SHALL NOT BE RESPONSIBLE FOR THE ACCURACY OR COMPLETENESS OF SCANNED COPIES OF THIS PLAN SHEET.

TO ACCOMPANY PLANS DATED 6-30-16

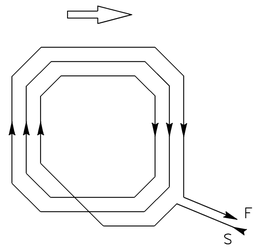

WINDING DETAIL

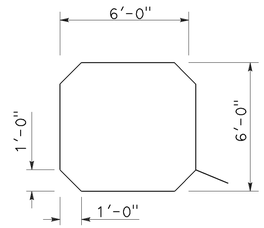

SAW CUT DETAIL

TYPE A LOOP DETECTOR CONFIGURATION

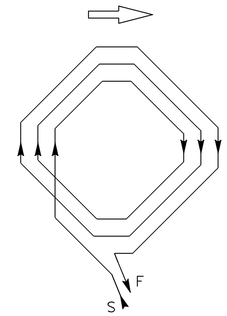

WINDING DETAIL

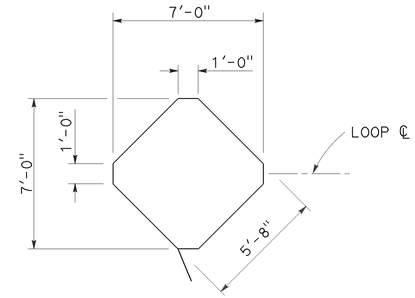

SAW CUT DETAIL

TYPE B LOOP DETECTOR CONFIGURATION

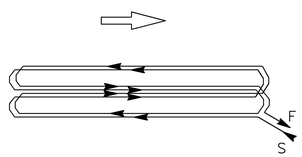

WINDING DETAIL

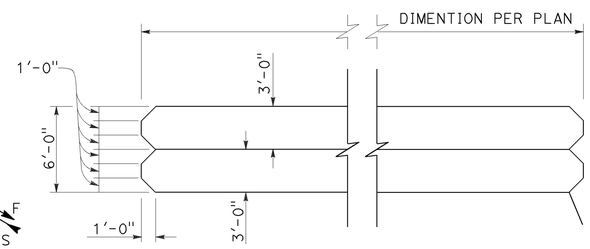

SAW CUT DETAIL

TYPE C LOOP DETECTOR CONFIGURATION

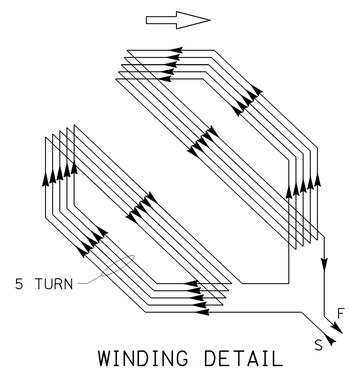

WINDING DETAIL

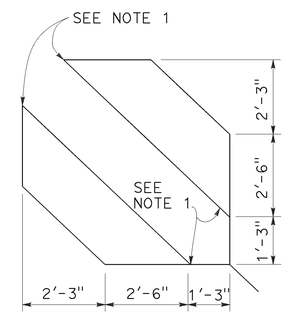

SAW CUT DETAIL

TYPE D LOOP DETECTOR CONFIGURATION

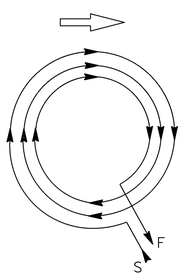

WINDING DETAIL

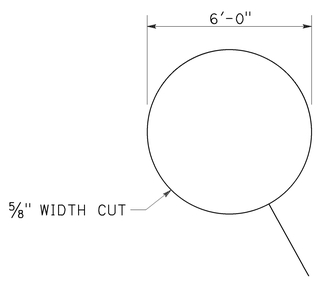

SAW CUT DETAIL

TYPE E LOOP DETECTOR CONFIGURATION

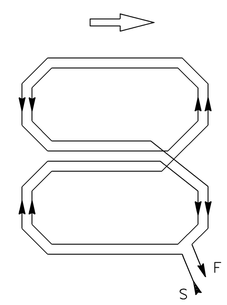

WINDING DETAIL

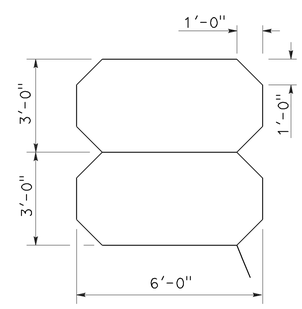

SAW CUT DETAIL

TYPE Q LOOP DETECTOR CONFIGURATION

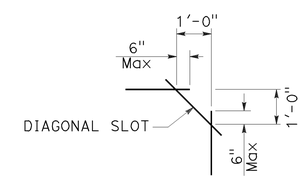

PLAN VIEW OF DIAGONAL SLOT AT CORNERS

NOTES:

1. Round corners of acute angle saw cuts to prevent damage to conductors.
2. Typical distance separating loops from edge to edge is 10' for Type A, B, D and E installation in single lane.
3. Use Type D loops for limit line detection and bicycle lanes.

STATE OF CALIFORNIA
DEPARTMENT OF TRANSPORTATION

ELECTRICAL SYSTEMS (DETECTORS)

NO SCALE

RSP ES-5B DATED APRIL 15, 2016 SUPERSEDES RSP ES-5B DATED OCTOBER 30, 2015 AND RSP ES-5B DATED JULY 19, 2013 AND STANDARD PLAN ES-5B DATED MAY 20, 2011 - PAGE 449 OF THE STANDARD PLANS BOOK DATED 2010.

REVISED STANDARD PLAN RSP ES-5B

2010 REVISED STANDARD PLAN RSP ES-5B

1-22-16

Dist	COUNTY	ROUTE	POST MILES TOTAL PROJECT	SHEET No.	TOTAL SHEETS
07	LA	1	2.4/7.2	184	200

Theresa Gabriel
REGISTERED ELECTRICAL ENGINEER

October 30, 2015
PLANS APPROVAL DATE

REGISTERED PROFESSIONAL ENGINEER
Theresa Aziz Gabriel
No. E15129
Exp. 6-30-16
ELECTRICAL
STATE OF CALIFORNIA

THE STATE OF CALIFORNIA OR ITS OFFICERS OR AGENTS SHALL NOT BE RESPONSIBLE FOR THE ACCURACY OR COMPLETENESS OF SCANNED COPIES OF THIS PLAN SHEET.

TO ACCOMPANY PLANS DATED 6-30-16

2010 REVISED STANDARD PLAN RSP ES-5C

NOTES:

1. Back casting shape to fit curvature of pole.
2. Provide cover fitting for top of post, when PBA is mounted on push button assembly post.
3. Install push button on crosswalk side of standard.
4. Use R10 series regulatory signs and plaques for pedestrian and bicycle facilities.

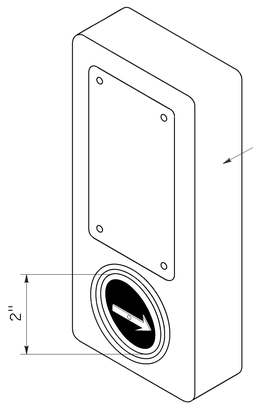

ACCESSIBLE PEDESTRIAN SIGNAL

DETAIL A

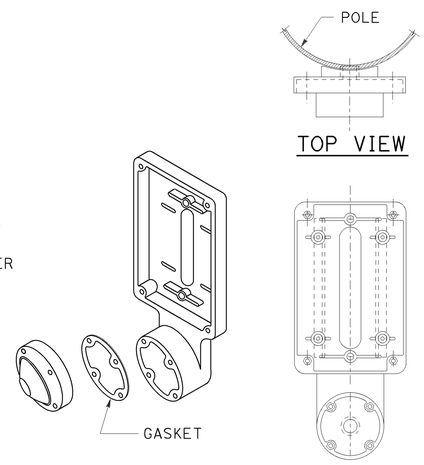

TYPE B PUSH BUTTON ASSEMBLY

DETAIL B

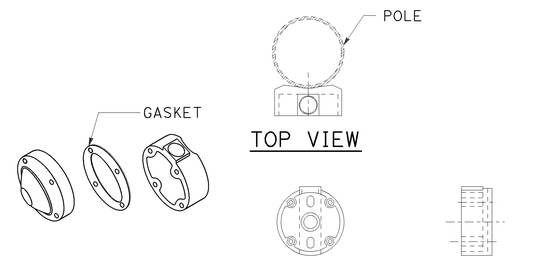

TYPE C PUSH BUTTON ASSEMBLY

DETAIL C

STATE OF CALIFORNIA
DEPARTMENT OF TRANSPORTATION

ELECTRICAL SYSTEMS (ACCESSIBLE PEDESTRIAN SIGNAL AND PUSH BUTTON ASSEMBLIES)

NO SCALE

RSP ES-5C DATED OCTOBER 30, 2015 SUPERSEDES RSP ES-5C DATED JULY 19, 2013 AND STANDARD PLAN ES-5C DATED MAY 20, 2011 - PAGE 450 OF THE STANDARD PLANS BOOK DATED 2010.

REVISED STANDARD PLAN RSP ES-5C

8-24-15

Dist	COUNTY	ROUTE	POST MILES TOTAL PROJECT	SHEET No.	TOTAL SHEETS
07	LA	1	2.4/7.2	185	200

Theresa Gabriel
REGISTERED ELECTRICAL ENGINEER

October 30, 2015
PLANS APPROVAL DATE

REGISTERED PROFESSIONAL ENGINEER Theresa Aziz Gabriel No. E15129 Exp. 6-30-16 ELECTRICAL STATE OF CALIFORNIA

THE STATE OF CALIFORNIA OR ITS OFFICERS OR AGENTS SHALL NOT BE RESPONSIBLE FOR THE ACCURACY OR COMPLETENESS OF SCANNED COPIES OF THIS PLAN SHEET.

TO ACCOMPANY PLANS DATED 6-30-16

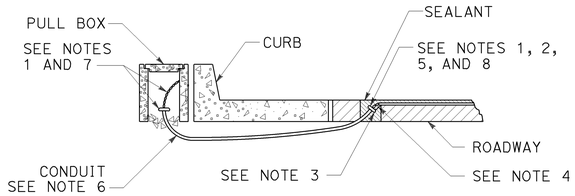

TYPE A
CURB TERMINATION DETAIL

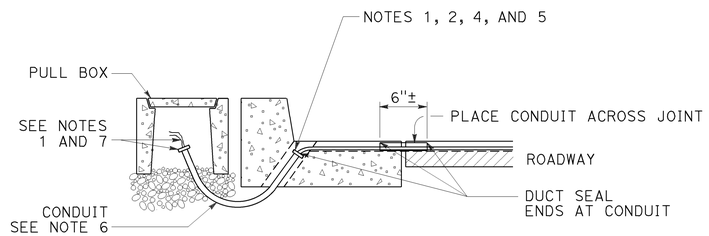

CROSS SECTION

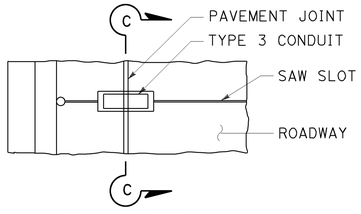

PLAN VIEW

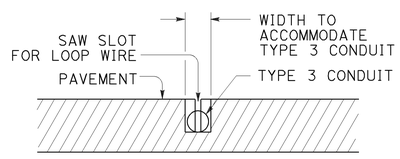

SECTION C-C

TYPE B
CURB TERMINATION DETAIL

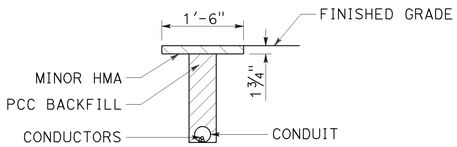

"T" TRENCH
DETAIL T

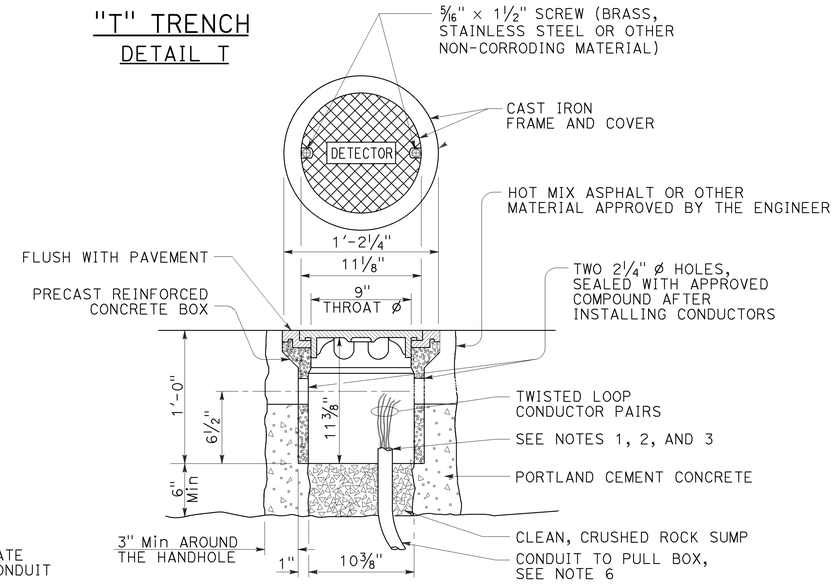

DETECTOR HANDHOLE DETAIL

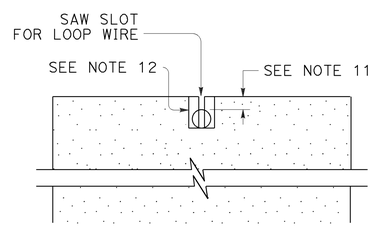

SECTION A-A

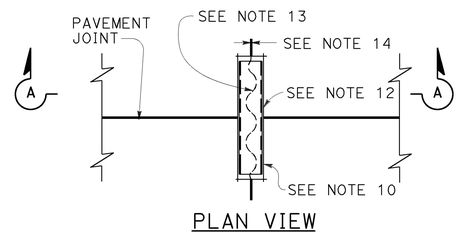

PLAN VIEW
TYPICAL LOOP LEAD-IN DETAIL AT PAVEMENT JOINT

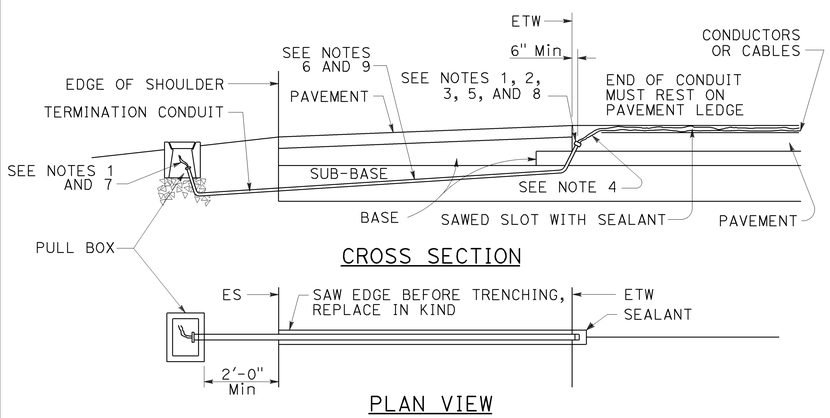

CROSS SECTION

PLAN VIEW
SHOULDER TERMINATION DETAILS

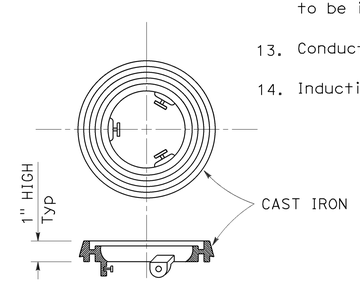

LOCKING GRADE RING

NOTES:

1. Bushing shall be used at end of conduit.
2. Tape detector conductors or cables 3" each side of bushings.
3. Install duct seal compound to each end of termination conduit before installing sealant.
4. Round all sharp edges where detector conductors or cables have to pass.
5. End of conduit shall be 3⅛" below roadway surface.
6.

Conduit size	Loop conductors
1"C minimum	1 to 2 pairs
1½"C minimum	3 to 4 pairs
2"C minimum	5 or more pairs

7. Splice detector conductors or cables to detector lead-in-cable.
8. Location of detector handhole when shown on plans.
9. When the shoulder and traveled way are paved with the same material and there is no joint between them, the conduit shall extend only 2'-0" into the shoulder pavement.
10. ¾"C, Type 3 conduit 6" long minimum, plug both ends with duct compound to keep out sealant.
11. ½" Minimum between top of conduit and pavement surface.
12. Sawcut shall not exceed 1" in width and ⅛" longer than conduit to be installed.
13. Conductors with ½" minimum slack inside conduit.
14. Inductive loop detector saw slot.

STATE OF CALIFORNIA
DEPARTMENT OF TRANSPORTATION

ELECTRICAL SYSTEMS (CURB AND SHOULDER TERMINATION, TRENCH, AND HANDHOLE DETAILS)

NO SCALE

RSP ES-5D DATED OCTOBER 30, 2015 SUPERSEDES RSP ES-5D DATED JULY 19, 2013 AND STANDARD PLAN ES-5D DATED MAY 20, 2011 - PAGE 451 OF THE STANDARD PLANS BOOK DATED 2010.

REVISED STANDARD PLAN RSP ES-5D

2010 REVISED STANDARD PLAN RSP ES-5D

8-19-15

Dist	COUNTY	ROUTE	POST MILES TOTAL PROJECT	SHEET No.	TOTAL SHEETS
07	LA	1	2.4/7.2	186	200

REGISTERED CIVIL ENGINEER

July 15, 2016
PLANS APPROVAL DATE

REGISTERED PROFESSIONAL ENGINEER
Stanley P. Johnson
No. C57793
Exp. 3-31-18
CIVIL
STATE OF CALIFORNIA

THE STATE OF CALIFORNIA OR ITS OFFICERS OR AGENTS SHALL NOT BE RESPONSIBLE FOR THE ACCURACY OR COMPLETENESS OF SCANNED COPIES OF THIS PLAN SHEET.

TO ACCOMPANY PLANS DATED 6-30-16

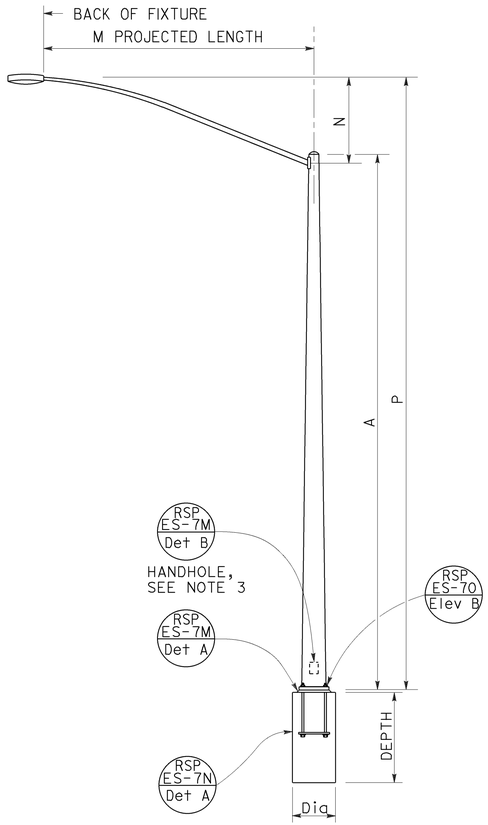

TYPE 15 AND TYPE 21
ELEVATION A

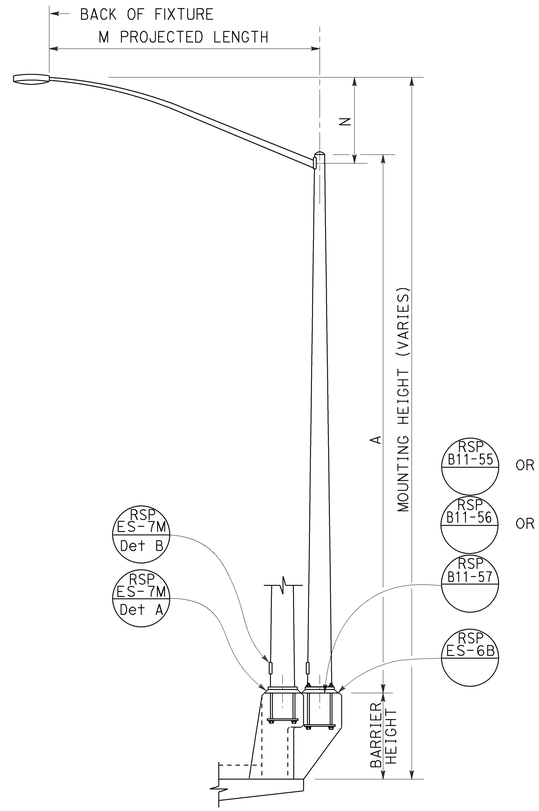

TYPE 15 AND TYPE 21 BARRIER RAIL MOUNTED
ELEVATION B

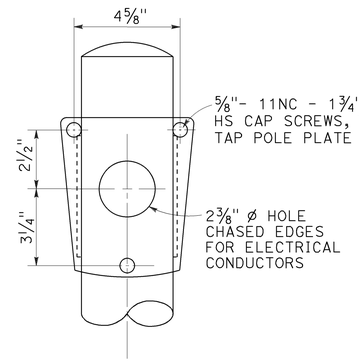

FRONT VIEW

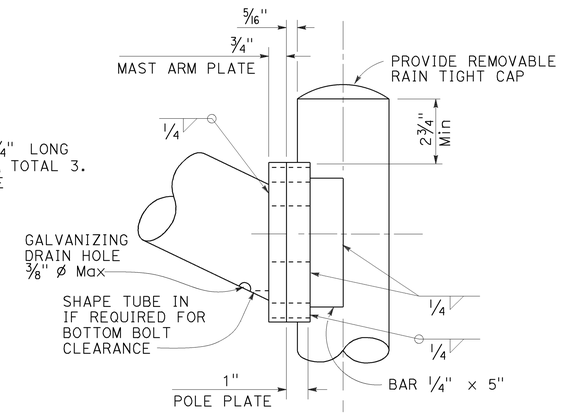

SIDE VIEW

LUMINAIRE MAST ARM CONNECTION
DETAIL R

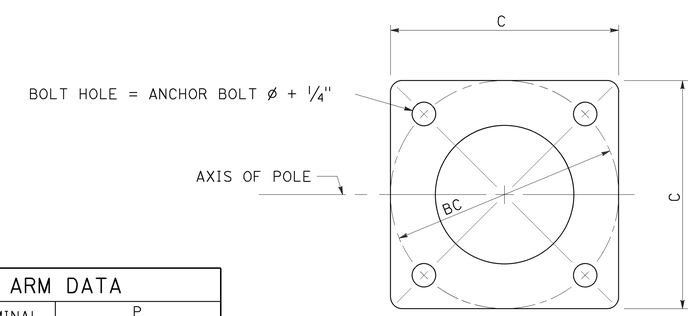

BASE PLATE
DETAIL A

POLE TYPE	POLE DATA				BASE PLATE DATA				CIDH PILE FOUNDATION	
	A HEIGHT	Min OD BASE	Min OD TOP	WALL THICKNESS	C	BC = BOLT CIRCLE	THICKNESS	ANCHOR BOLT SIZE	Dia	DEPTH
15	30'-0"	8"	3 11/16"	0.1196"	1'-0"	1'-0"	1 1/2"	1" ø x 36" *	2'-6"	6'-0"
21	35'-0"	8 5/8"	3 9/16"	0.1793"			2"	1 1/4" ø x 36" *		7'-0"

* FOR BARRIER RAIL BOLTS, SEE REVISED STANDARD PLAN RSP ES-6B.

LUMINAIRE MAST ARM DATA					
M PROJECTED LENGTH	N RISE	Min OD AT POLE	NOMINAL THICKNESS	P TYPE 15	P TYPE 21
6'-0"	2'-0"±	3 1/4"	0.1196"	31'-6"±	36'-6"±
8'-0"	2'-6"±	3 1/2"		32'-0"±	37'-0"±
10'-0"	3'-3"±	3 7/8"		32'-9"±	37'-9"±
12'-0"	4'-3"±			33'-9"±	38'-9"±
15'-0"	4'-9"±	4 1/4"		34'-3"±	39'-3"±

NOTES:

1. ▭ Indicates mast arm length to be used unless otherwise noted on the plans.
2. For Type 15-SB, use Type 15 standard with Type 30 slip base plate details, see Revised Standard Plan RSP ES-6F.
3. Handhole shall be located on the downstream side of traffic.
4. For additional notes and details, see Revised Standard Plans RSP ES-7M and RSP ES-7N.

STATE OF CALIFORNIA
DEPARTMENT OF TRANSPORTATION

ELECTRICAL SYSTEMS (LIGHTING STANDARD, TYPES 15 AND 21)

NO SCALE

RSP ES-6A DATED JULY 15, 2016 SUPERSEDES RSP ES-6A DATED OCTOBER 30, 2015 AND STANDARD PLAN ES-6A DATED MAY 20, 2011 - PAGE 452 OF THE STANDARD PLANS BOOK DATED 2010.

REVISED STANDARD PLAN RSP ES-6A

2010 REVISED STANDARD PLAN RSP ES-6A

6-20-16

Dist	COUNTY	ROUTE	POST MILES TOTAL PROJECT	SHEET No.	TOTAL SHEETS
07	LA	1	2.4/7.2	187	200

REGISTERED CIVIL ENGINEER

July 15, 2016
PLANS APPROVAL DATE

REGISTERED PROFESSIONAL ENGINEER
Stanley P. Johnson
No. C57793
Exp. 3-31-18
CIVIL
STATE OF CALIFORNIA

THE STATE OF CALIFORNIA OR ITS OFFICERS OR AGENTS SHALL NOT BE RESPONSIBLE FOR THE ACCURACY OR COMPLETENESS OF SCANNED COPIES OF THIS PLAN SHEET.

TO ACCOMPANY PLANS DATED 6-30-16

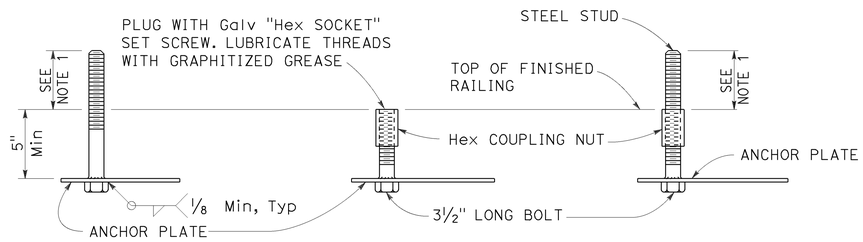

FOR IMMEDIATE INSTALLATION
DETAIL B-1

FOR FUTURE INSTALLATION WITH PLUG
DETAIL B-2

FOR INSTALLATION ON FUTURE ANCHORAGE WITH STUD
DETAIL B-3

ELECTROLIER ANCHORAGES
DETAIL B

NOTES:

1. Anchor bolt or stud length shall be such that thread extends 1/2" maximum above nut on level base plate after grouting. See Detail N.
2. Electrolier anchor bolts shall be held in position for pouring by means of anchor plates and suitable templates. Deviation from the true position, vertical and height shall not exceed 1/16".
3. See railing sheets for reinforcement and structural details at electroliers and pull boxes.

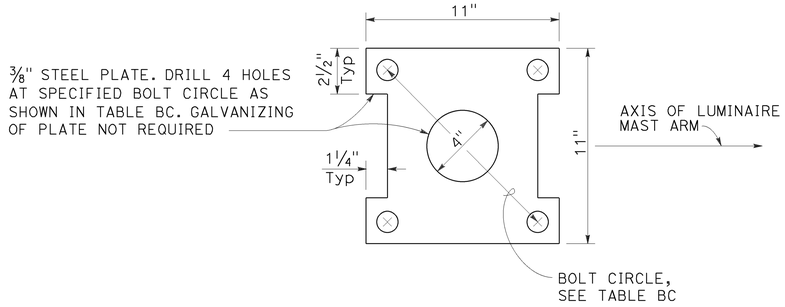

ANCHOR PLATE
DETAIL A

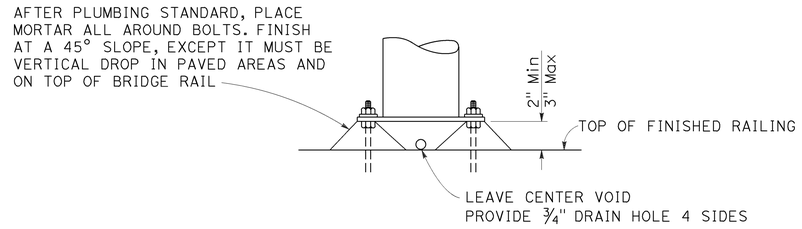

GROUTING AT ELECTROLIER
DETAIL N

TABLE BC				
TYPE	BC = BOLT CIRCLE	ANCHOR BOLT DIAMETER	COUPLING NUT BASIC LENGTH	SET SCREW LENGTH DETAIL B-2
15	1'-0"	1"	3"	1 1/2"
21		1 1/4"	3 3/4"	1 7/8"

STATE OF CALIFORNIA
DEPARTMENT OF TRANSPORTATION

ELECTRICAL SYSTEMS (ELECTROLIER ANCHORAGE AND GROUTING FOR TYPE 15 AND TYPE 21 BARRIER RAIL MOUNTED)

NO SCALE

RSP ES-6B DATED JULY 15, 2016 SUPERSEDES STANDARD PLAN ES-6B DATED MAY 20, 2011 - PAGE 453 OF THE STANDARD PLANS BOOK DATED 2010.

REVISED STANDARD PLAN RSP ES-6B

2010 REVISED STANDARD PLAN RSP ES-6B

6-20-16

Dist	COUNTY	ROUTE	POST MILES TOTAL PROJECT	SHEET No.	TOTAL SHEETS
07	LA	1	2.4/7.2	188	200

REGISTERED CIVIL ENGINEER

July 15, 2016
PLANS APPROVAL DATE

REGISTERED PROFESSIONAL ENGINEER
Stanley P. Johnson
No. C57793
Exp. 3-31-18
CIVIL
STATE OF CALIFORNIA

THE STATE OF CALIFORNIA OR ITS OFFICERS OR AGENTS SHALL NOT BE RESPONSIBLE FOR THE ACCURACY OR COMPLETENESS OF SCANNED COPIES OF THIS PLAN SHEET.

TO ACCOMPANY PLANS DATED 6-30-16

2010 REVISED STANDARD PLAN RSP ES-7A

NOTES:

1. For additional notes, details and data for Type 15TS and Type 21TS Standards, see Revised Standard Plan RSP ES-6A.
2. Handhole shall be located on the downstream side of traffic.

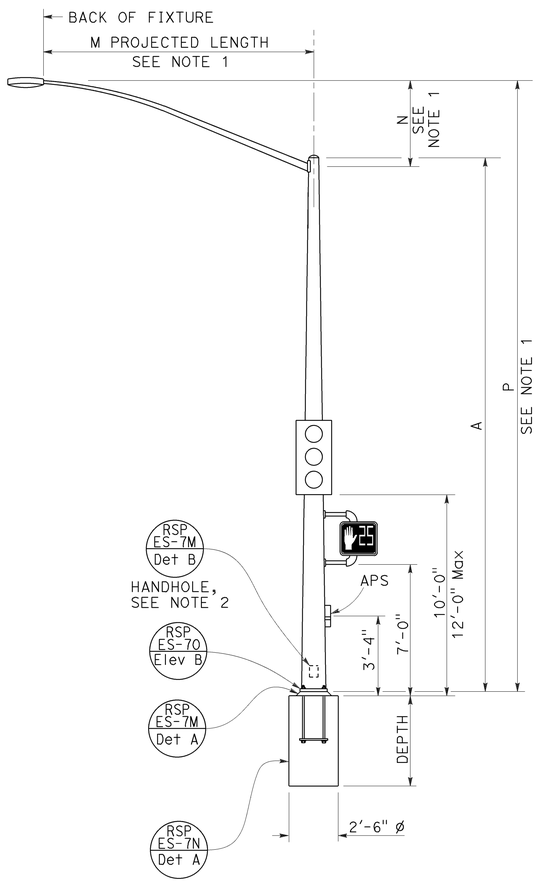

TYPE 15TS AND 21TS STANDARD

ELEVATION A

(See Note 1)

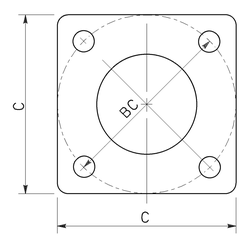

BASE PLATE

TYPE 15TS AND 21TS

DETAIL A

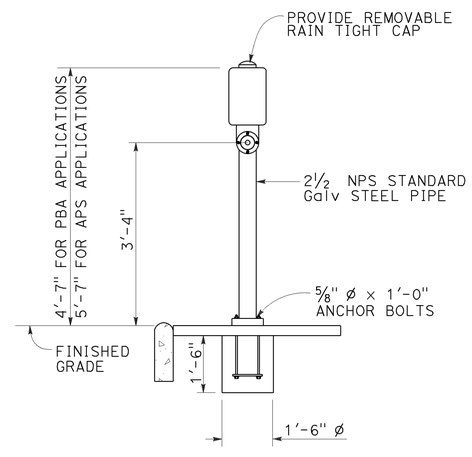

ELEVATION

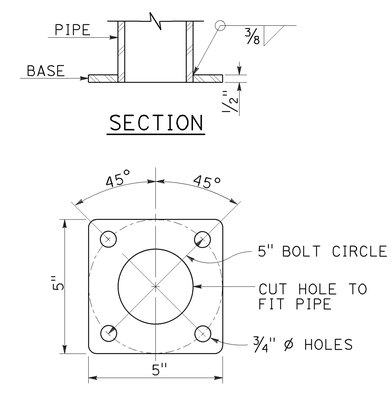

BASE PLATE

PBA POST

PUSH BUTTON ASSEMBLY POST

DETAIL B

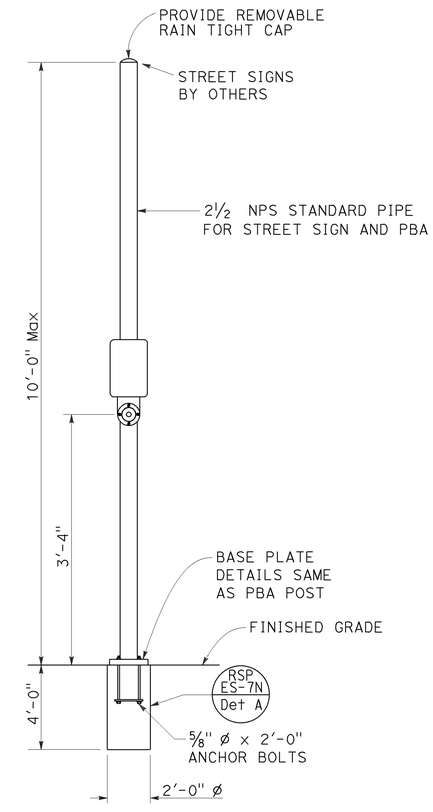

COMBINED STREET SIGN

PUSH BUTTON ASSEMBLY POST

DETAIL C

POLE TYPE	POLE DATA				BASE PLATE DATA				CIDH
	A HEIGHT	Min OD BASE	Min OD TOP	WALL THICKNESS	C	BC = BOLT CIRCLE	THICKNESS	ANCHOR BOLT SIZE	DEPTH
15TS	30'-0"	8"	3 11/16"	0.1793"	1'-1½"	1'-0"	2"	1½" ø x 42"	7'-6"
21TS	35'-0"	9⅜"	3 9/16"		1'-3"	1'-2"			8'-6"

STATE OF CALIFORNIA
DEPARTMENT OF TRANSPORTATION

ELECTRICAL SYSTEMS (SIGNAL AND LIGHTING STANDARD, TYPE TS, AND PUSH BUTTON ASSEMBLY POST)

NO SCALE

RSP ES-7A DATED JULY 15, 2016 SUPERSEDES RSP ES-7A DATED OCTOBER 30, 2015 AND RSP ES-7A DATED JULY 19, 2013 AND STANDARD PLAN ES-7A DATED MAY 20, 2011 - PAGE 462 OF THE STANDARD PLANS BOOK DATED 2010.

REVISED STANDARD PLAN RSP ES-7A

6-20-16

Dist	COUNTY	ROUTE	POST MILES TOTAL PROJECT	SHEET No.	TOTAL SHEETS
07	LA	1	2.4/7.2	189	200

REGISTERED CIVIL ENGINEER

July 15, 2016
PLANS APPROVAL DATE

REGISTERED PROFESSIONAL ENGINEER
Stanley P. Johnson
No. C57793
Exp. 3-31-18
CIVIL
STATE OF CALIFORNIA

THE STATE OF CALIFORNIA OR ITS OFFICERS OR AGENTS SHALL NOT BE RESPONSIBLE FOR THE ACCURACY OR COMPLETENESS OF SCANNED COPIES OF THIS PLAN SHEET.

TO ACCOMPANY PLANS DATED 6-30-16

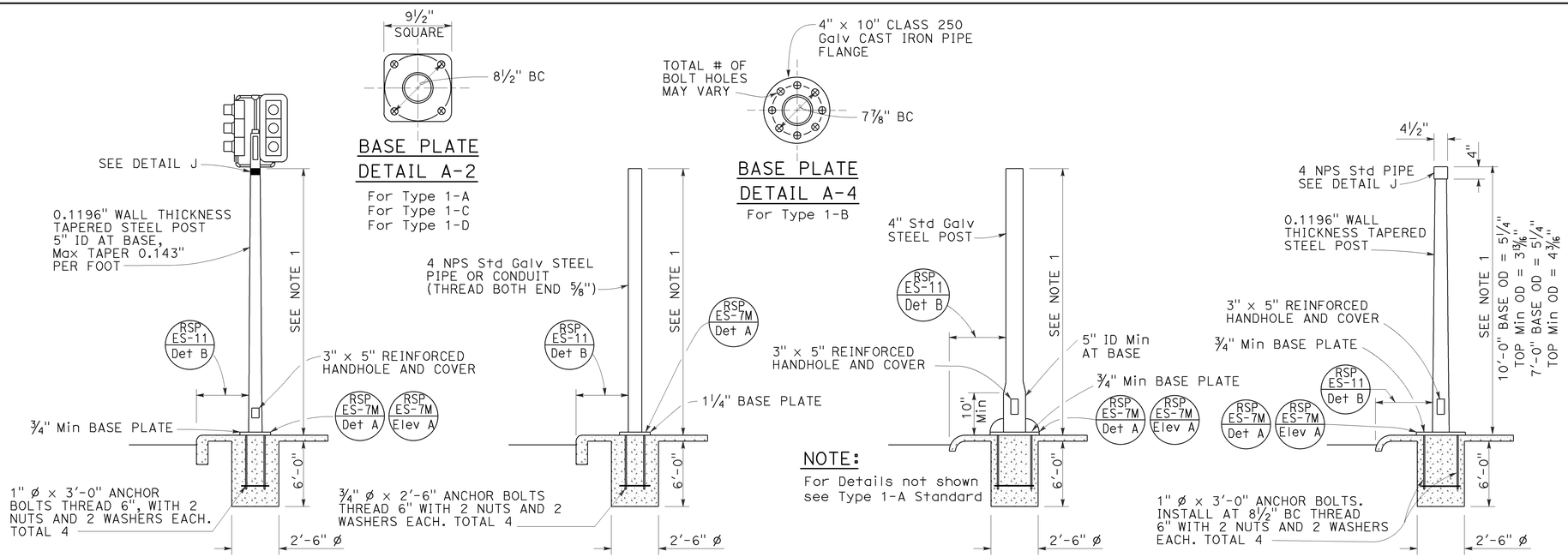

TYPE 1 SIGNAL STANDARDS
DETAIL A

NOTES:

1. Standards shall be 10'-0" ± 2" for vehicle signals and 7'-0" ± 2" for pedestrian signals unless shorter pole is noted on project plans.
2. Top of standards shall be 4½" OD.
3. Conduits shall extend 2" maximum above finished surface of foundation and for Types 1-A, 1-C and 1-D shall be sloped toward handhole.
4. Anchor bolts shall be bonded to conduit or grounding conductor.
5. For additional notes and details, see Revised Standard Plans RSP ES-7M and RSP ES-7N.
6. Pour foundation concrete against undisturbed soil.
7. For standards with handhole, locate in the downstream side of traffic.
8. Coupling nuts to be used only when shown or specified on project plans.

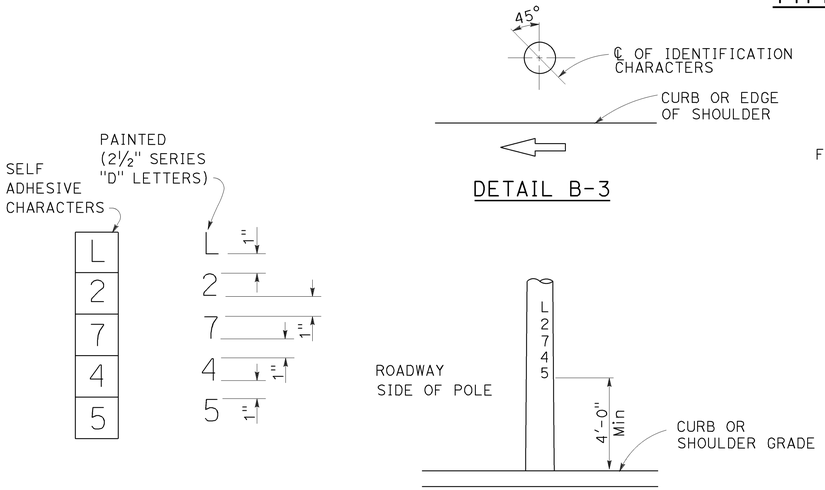

IDENTIFICATION CHARACTER DETAIL
DETAIL B-1

TYPICAL IDENTIFICATION CHARACTER FORMAT
DETAIL B-2

LOCATION OF EQUIPMENT IDENTIFICATION CHARACTERS ON STANDARDS AND POSTS
DETAIL B

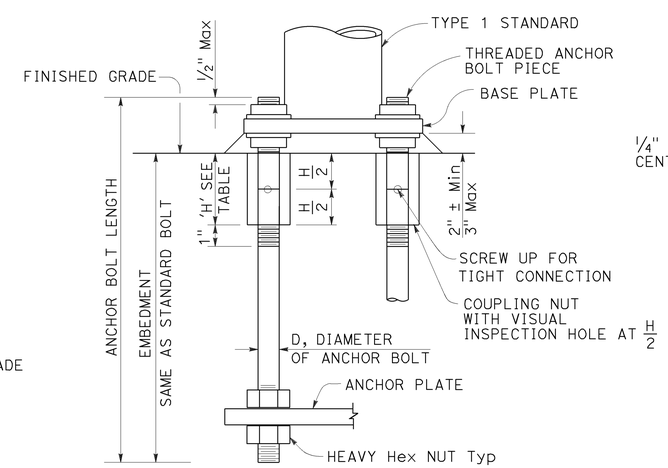

ANCHOR BOLTS WITH SLEEVE NUTS
DETAIL C
(See Note 8)

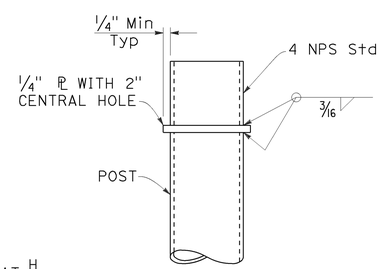

DETAIL J

COUPLING NUT TABLE	
BOLT DIAMETER	NUT TABLE THICKNESS 'H'
¾"	2¼"
1"	3'

STATE OF CALIFORNIA
DEPARTMENT OF TRANSPORTATION

ELECTRICAL SYSTEMS (SIGNAL AND LIGHTING STANDARD, TYPE 1 AND EQUIPMENT IDENTIFICATION CHARACTERS)

NO SCALE

RSP ES-7B DATED JULY 15, 2016 SUPERSEDES RSP ES-7B DATED OCTOBER 30, 2015 AND STANDARD PLAN ES-7B DATED MAY 20, 2011 - PAGE 463 OF THE STANDARD PLANS BOOK DATED 2010.

REVISED STANDARD PLAN RSP ES-7B

2010 REVISED STANDARD PLAN RSP ES-7B

6-20-16

Dist	COUNTY	ROUTE	POST MILES TOTAL PROJECT	SHEET No.	TOTAL SHEETS
07	LA	1	2.4/7.2	190	200

REGISTERED CIVIL ENGINEER

July 15, 2016
PLANS APPROVAL DATE

REGISTERED PROFESSIONAL ENGINEER
Stanley P. Johnson
No. C57793
Exp. 3-31-18
CIVIL
STATE OF CALIFORNIA

THE STATE OF CALIFORNIA OR ITS OFFICERS OR AGENTS SHALL NOT BE RESPONSIBLE FOR THE ACCURACY OR COMPLETENESS OF SCANNED COPIES OF THIS PLAN SHEET.

TO ACCOMPANY PLANS DATED 6-30-16

NOTE:

Handhole shall be located on the downstream side of traffic.

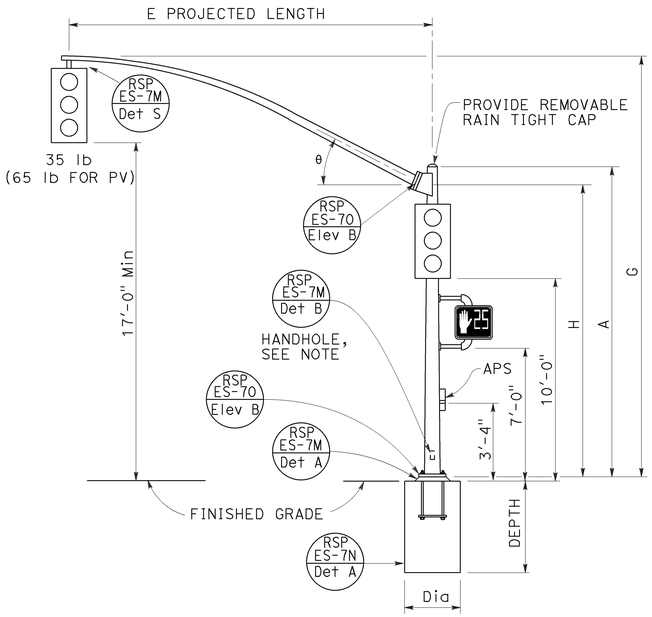

TYPE 16-1-100, 18-1-100

ELEVATION A

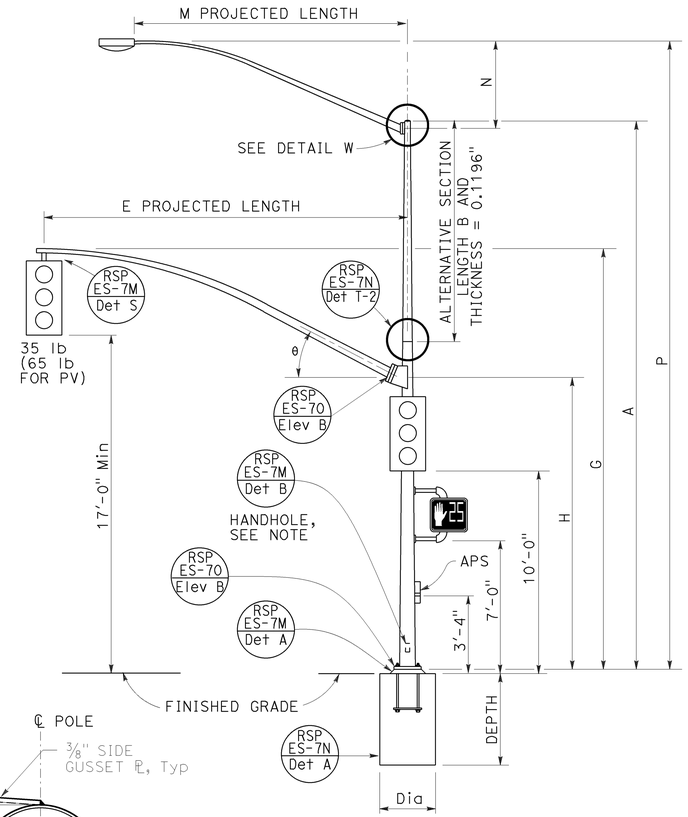

TYPE 19-1-100, 19A-1-100

ELEVATION B

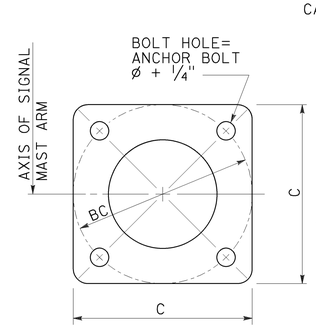

DETAIL D

BASE PLATE

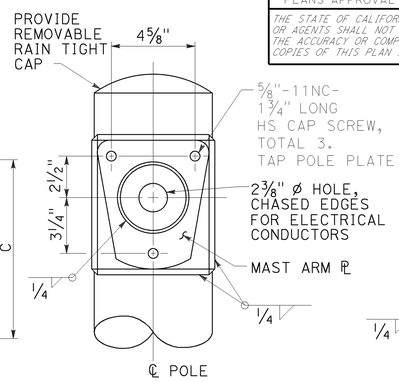

DETAIL W-1

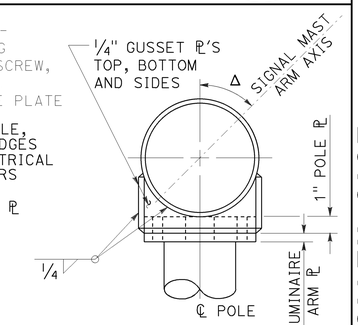

DETAIL W-2

LUMINAIRE MAST ARM CONNECTION

DETAIL W

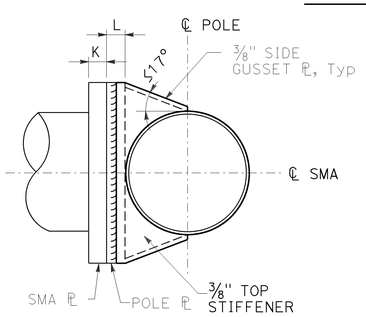

SECTION B-B

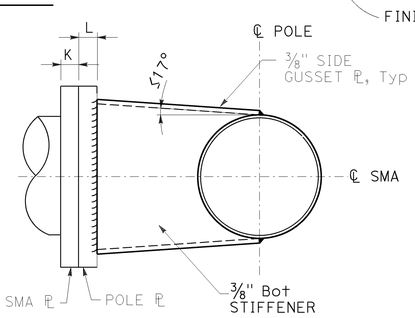

SECTION C-C

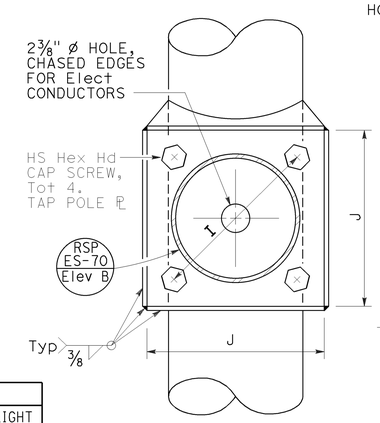

SECTION A-A

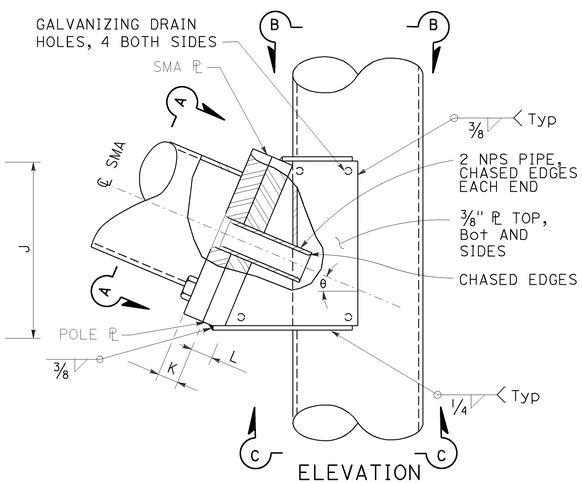

ELEVATION

SIGNAL MAST ARM CONNECTION

DETAIL A

SIGNAL MAST ARM DATA										
E PROJECTED LENGTH	G MOUNTING HEIGHT	H	Min OD AT POLE	THICKNESS	I BOLT CIRCLE	HS CAP SCREWS	J PLATE SIZE	K MAST ARM ℄ THICKNESS	L POLE ℄ THICKNESS	θ
15'-0"	21'-8"±	17'-6"	7 3/8"	0.1793"	12"	1 1/4"-7NC-3"	1'-0"	1 1/4"	1 1/2"	23°
20'-0"			8"				1'-1"			
25'-0"	22'-8"±	16'-0"	9"							
30'-0"	23'-0"±		10"							

LUMINAIRE MAST ARM DATA					
M PROJECTED LENGTH	N RISE	Min OD AT POLE	THICKNESS	P MOUNTING HEIGHT 30'-0" POLE	P MOUNTING HEIGHT 35'-0" POLE
6'-0"	2'-0"±	3 1/4"	0.1196"	31'-6"±	36'-6"±
8'-0"	2'-6"±	3 1/2"		32'-0"±	37'-0"±
10'-0"	3'-3"±	3 7/8"		32'-9"±	37'-9"±
12'-0"	4'-3"±			33'-9"±	38'-9"±
15'-0"	4'-9"±	4 1/4"		34'-3"±	39'-3"±

POLE TYPE	LOAD CASE	WIND VELOCITY (mph)	POLE DATA: A HEIGHT	Min OD BASE	Min OD TOP	THICKNESS	ALTERNATIVE SECTION B LENGTH	ALTERNATIVE SECTION BOTTOM	ALTERNATIVE SECTION TOP	BASE PLATE DATA: C	BC = BOLT CIRCLE	THICKNESS	ANCHOR BOLT SIZE	LUMINAIRE MAST ARM	SIGNAL MAST ARM	CIDH PILE FOUNDATION Dia	CIDH PILE FOUNDATION DEPTH
16-1-100	1	100	18'-6"	12"	9 3/8"	0.2391" OR 0.25"	None			1'-6"	1'-4"	2"	1 3/4"ø × 42"	NONE	15'-0", [20'-0"]	3'-0"	9'-0"
18-1-100			17'-0"				None							NONE			
19-1-100			30'-0"	14"	9 3/4"		10'-0"	11 1/8"	9 3/4"	1'-10"	1'-8"	2 1/2"	2"ø × 42"	6'-15' [12'-0"]	25'-0", [30'-0"]	3'-6"	10'-0"
19A-1-100			35'-0"		9"		15'-0"		9"					6'-15' [15'-0"]			

[ ] INDICATES MAST ARM LENGTH TO BE USED UNLESS OTHERWISE NOTED ON PLANS.

STATE OF CALIFORNIA
DEPARTMENT OF TRANSPORTATION

ELECTRICAL SYSTEMS (SIGNAL AND LIGHTING STANDARD, CASE 1 SIGNAL MAST ARM LOADING, WIND VELOCITY = 100 MPH AND SIGNAL MAST ARM LENGTHS 15' TO 30')

NO SCALE

RSP ES-7C DATED JULY 15, 2016 SUPERSEDES RSP ES-7C DATED OCTOBER 30, 2015 AND RSP ES-7C DATED JULY 19, 2013 AND STANDARD PLAN ES-7C DATED MAY 20, 2011 - PAGE 464 OF THE STANDARD PLANS BOOK DATED 2010.

REVISED STANDARD PLAN RSP ES-7C

2010 REVISED STANDARD PLAN RSP ES-7C

6-20-16

Dist	COUNTY	ROUTE	POST MILES TOTAL PROJECT	SHEET No.	TOTAL SHEETS
07	LA	1	2.4/7.2	191	200

REGISTERED CIVIL ENGINEER

July 15, 2016
PLANS APPROVAL DATE

Stanley P. Johnson
No. C57793
Exp. 3-31-18
CIVIL
REGISTERED PROFESSIONAL ENGINEER
STATE OF CALIFORNIA

THE STATE OF CALIFORNIA OR ITS OFFICERS OR AGENTS SHALL NOT BE RESPONSIBLE FOR THE ACCURACY OR COMPLETENESS OF SCANNED COPIES OF THIS PLAN SHEET.

NOTE: TO ACCOMPANY PLANS DATED 6-30-16

Handhole shall be located on the downstream side of traffic.

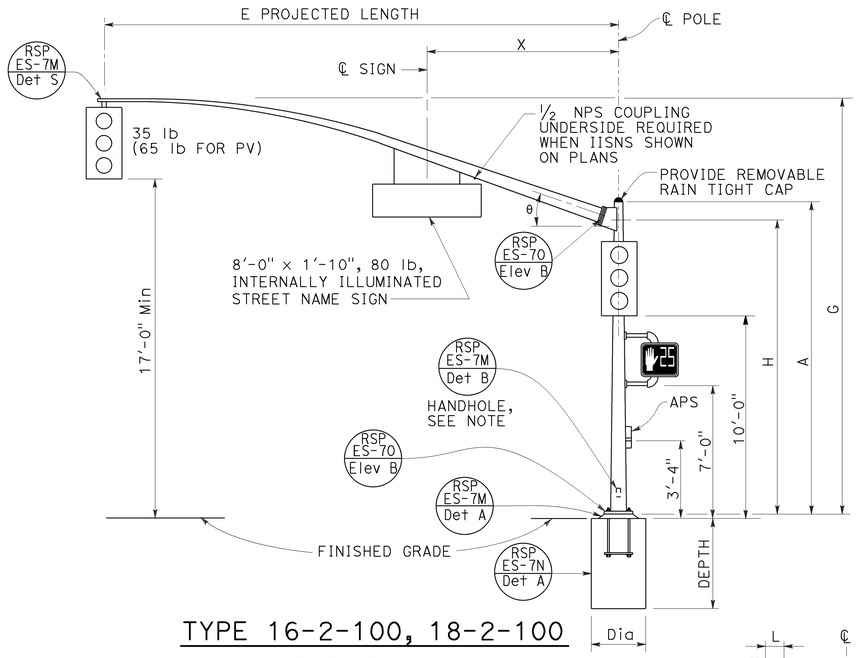

TYPE 16-2-100, 18-2-100

ELEVATION A

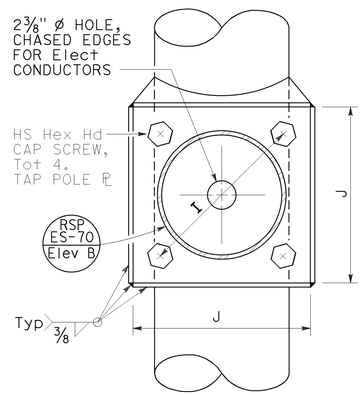

SECTION A-A

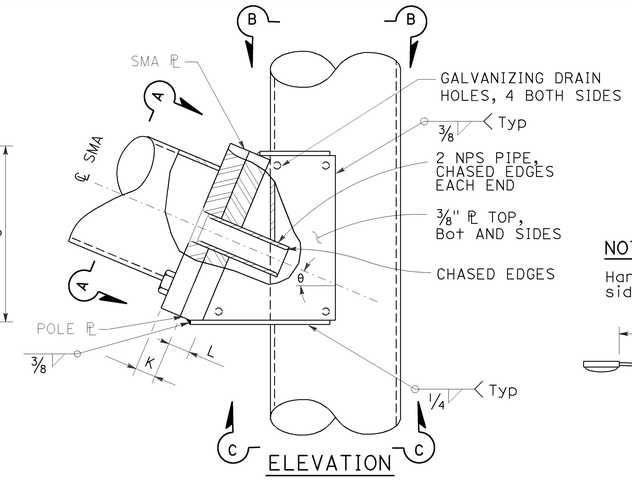

ELEVATION

SIGNAL MAST ARM CONNECTION

DETAIL A

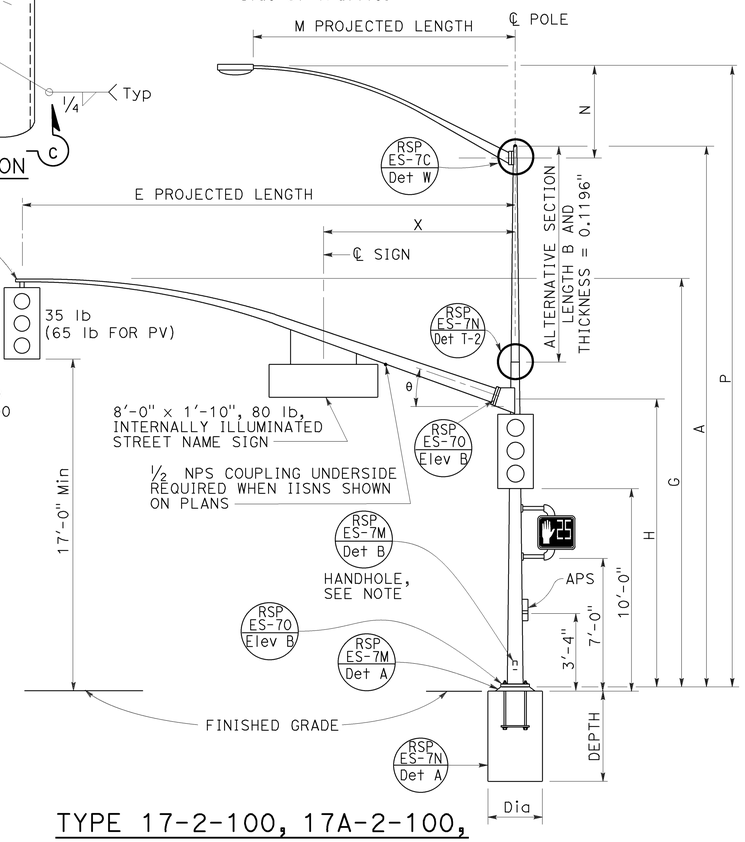

TYPE 17-2-100, 17A-2-100, 19-2-100, 19A-2-100

ELEVATION B

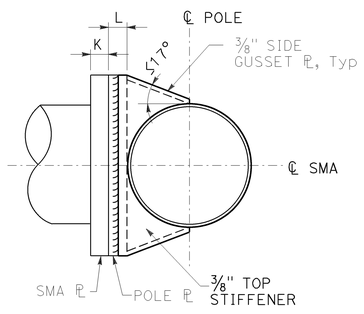

SECTION B-B

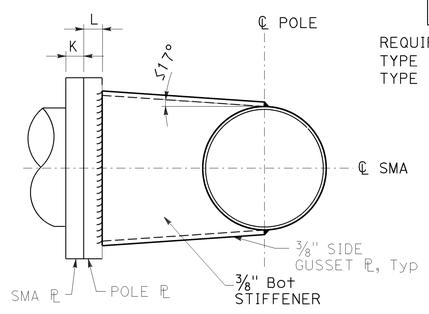

SECTION C-C

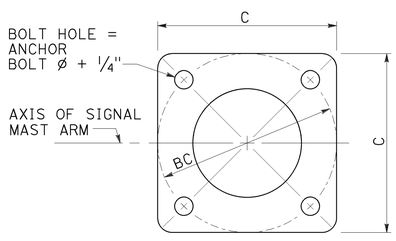

BASE PLATE

DETAIL B

SIGNAL MAST ARM DATA

E PROJECTED LENGTH	G MOUNTING HEIGHT	H	Min OD AT POLE	THICKNESS	I BOLT CIRCLE	HS CAP SCREWS	J PLATE SIZE	K MAST ARM ℙ THICKNESS	L POLE ℙ THICKNESS	θ	X Max
15'-0"	21'-8"±	17'-6"	7 3/8"	0.1793"	12"	1 1/4"-7NC-3"	1'-1"	1 1/4"	1 1/2"	23°	10'-6"
20'-0"	21'-8"±		8"								
25'-0"	22'-8"±	16'-0"	9"				1'-3"				
30'-0"	23'-0"±		10"	0.2391"							

LUMINAIRE MAST ARM DATA

M PROJECTED LENGTH	N RISE	Min OD AT POLE	THICKNESS	P MOUNTING HEIGHT 30'-0" POLE	P MOUNTING HEIGHT 35'-0" POLE
6'-0"	2'-0"±	3 1/4"	0.1196"	31'-6"±	36'-6"±
8'-0"	2'-6"±	3 1/2"		32'-0"±	37'-0"±
10'-0"	3'-3"±	3 7/8"		32'-9"±	37'-9"±
12'-0"	4'-3"±			33'-9"±	38'-9"±
15'-0"	4'-9"±	4 1/4"		34'-3"±	39'-3"±

POLE TYPE	LOAD CASE	WIND VELOCITY (mph)	POLE DATA: A HEIGHT	Min OD BASE	Min OD TOP	THICKNESS	ALTERNATIVE SECTION B LENGTH	ALTERNATIVE SECTION BOTTOM	ALTERNATIVE SECTION TOP	BASE PLATE DATA: C	BC = BOLT CIRCLE	THICKNESS	ANCHOR BOLT SIZE	LUMINAIRE MAST ARM	SIGNAL MAST ARM	CIDH PILE FOUNDATION Dia	CIDH PILE FOUNDATION DEPTH
16-2-100	2	100	18'-6"	14"	11 3/8"	0.2391" OR 0.25"				1'-10"	1'-8"	2 1/2"	2"Ø x 42"	NONE	15'-0", [20'-0"]	3'-6"	10'-0"
17-2-100			30'-0"		9 3/4"		10'-0"	11 1/8"	9 3/4"					6'-15' [12'-0"]			
17A-2-100			35'-0"		9"		15'-0"		9"					6'-15' [15'-0"]			
18-2-100			17'-0"		11 5/8"									None	25'-0", [30'-0"]		
19-2-100			30'-0"		9 3/4"		10'-0"	11 1/8"	9 3/4"					6'-15' [12'-0"]			
19A-2-100			35'-0"	16"	11"		15'-0"	13 1/8"	11"	1'-11"	1'-9"	3"	2 1/4"Ø x 42"	6'-15' [15'-0"]			12'-0"

[ ] INDICATES MAST ARM LENGTH TO BE USED UNLESS OTHERWISE NOTED ON PLANS.

STATE OF CALIFORNIA
DEPARTMENT OF TRANSPORTATION

ELECTRICAL SYSTEMS (SIGNAL AND LIGHTING STANDARD, CASE 2 SIGNAL MAST ARM LOADING, WIND VELOCITY=100 MPH AND SIGNAL MAST ARM LENGTHS 15' TO 30')

NO SCALE

RSP ES-7D DATED JULY 15, 2016 SUPERSEDES RSP ES-7D DATED OCTOBER 30, 2015 AND RSP ES-7D DATED JULY 19, 2013 AND STANDARD PLAN ES-7D DATED MAY 20, 2011 - PAGE 465 OF THE STANDARD PLANS BOOK DATED 2010.

REVISED STANDARD PLAN RSP ES-7D

2010 REVISED STANDARD PLAN RSP ES-7D

6-20-16

Dist	COUNTY	ROUTE	POST MILES TOTAL PROJECT	SHEET No.	TOTAL SHEETS
07	LA	1	2.4/7.2	192	200

REGISTERED CIVIL ENGINEER

July 15, 2016
PLANS APPROVAL DATE

REGISTERED PROFESSIONAL ENGINEER Stanley P. Johnson No. C57793 Exp. 3-31-18 CIVIL STATE OF CALIFORNIA

THE STATE OF CALIFORNIA OR ITS OFFICERS OR AGENTS SHALL NOT BE RESPONSIBLE FOR THE ACCURACY OR COMPLETENESS OF SCANNED COPIES OF THIS PLAN SHEET.

TO ACCOMPANY PLANS DATED 6-30-16

NOTE:
Handhole shall be located on the downstream side of traffic.

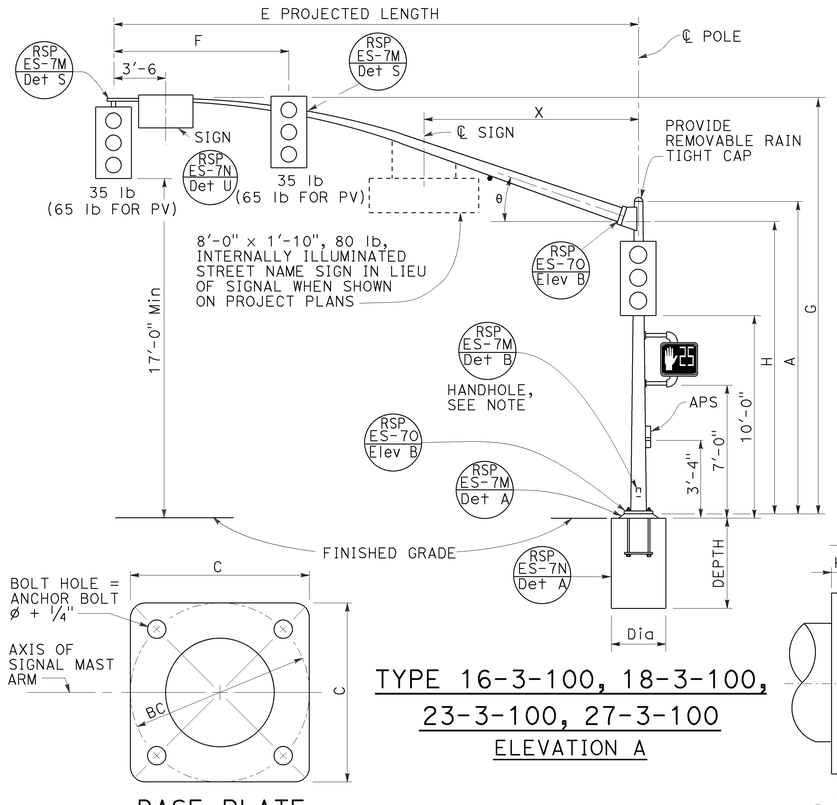

TYPE 16-3-100, 18-3-100, 23-3-100, 27-3-100
ELEVATION A

BASE PLATE
DETAIL B

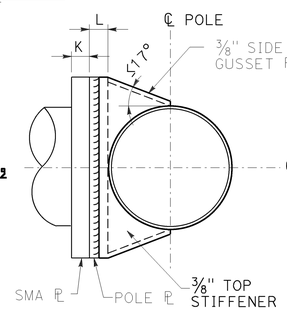

SECTION B-B

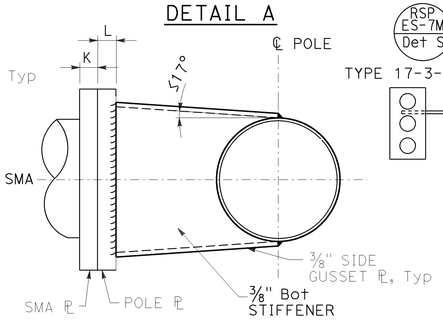

SECTION C-C

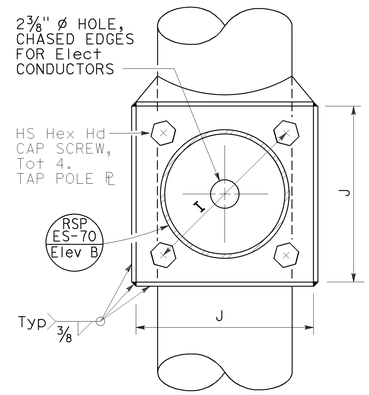

SECTION A-A

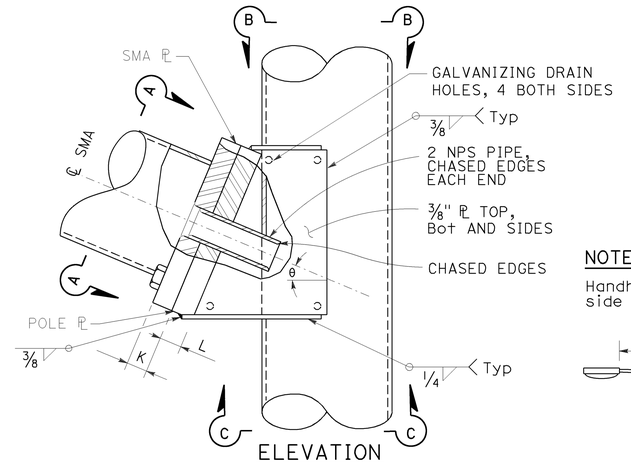

ELEVATION

SIGNAL MAST ARM CONNECTION
DETAIL A

SIGNAL MAST ARM DATA												
E PROJECTED LENGTH	F Min SPACING	G MOUNTING HEIGHT	H	Min OD AT POLE	THICKNESS	I BOLT CIRCLE	HS CAP SCREWS	J PLATE SIZE	K MAST ARM PL THICKNESS	L POLE PL THICKNESS	θ	X Max
15'-0"	8'-0"	21'-8"±	17'-6"	7 3/8"	0.1793"	12"	1 1/4"-7NC-3"	1'-3"	1 1/4"	1 1/2"	23°	-
20'-0"		21'-8"±		7 3/8"								
25'-0"	12'-0"	22'-8"±	16'-0"	7 3/8"	0.2391"							10'-6"
30'-0"		23'-0"±		8"								
35'-0"	14'-0"			8 3/4"		13"			1 1/2"	1 3/4"	21°	
40'-0"	15'-0"			9 3/8"							15°	13'-0"
45'-0"		23'-8"±		10 1/16"				1'-5"				

LUMINAIRE MAST ARM DATA					
M PROJECTED LENGTH	N RISE	Min OD AT POLE	THICKNESS	P MOUNTING HEIGHT 30'-0" POLE	P MOUNTING HEIGHT 35'-0" POLE
6'-0"	2'-0"±	3 1/4"	0.1196"	31'-6"±	36'-6"±
8'-0"	2'-6"±	3 1/2"		32'-0"±	37'-0"±
10'-0"	3'-3"±	3 7/8"		32'-9"±	37'-9"±
12'-0"	4'-3"±			33'-9"±	38'-9"±
15'-0"	4'-9"±	4 1/4"		34'-3"±	39'-3"±

POLE TYPE	LOAD CASE	WIND VELOCITY (mph)	POLE DATA A HEIGHT	Min OD BASE	Min OD TOP	THICKNESS	ALTERNATIVE SECTION B LENGTH	ALTERNATIVE SECTION BOTTOM	ALTERNATIVE SECTION TOP	BASE PLATE DATA C	BC = BOLT CIRCLE	THICKNESS	ANCHOR BOLT SIZE	LUMINAIRE MAST ARM	SIGNAL MAST ARM	CIDH PILE FOUNDATION Dia	CIDH PILE FOUNDATION DEPTH
16-3-100	3	100	18'-6"	16"	13 3/8"	0.2391" OR 0.25"				1'-11"	1'-9"	3"	2 1/4" ø x 42"	NONE	15'-0", [20'-0"]	3'-6"	12'-0"
17-3-100			30'-0"		11 3/4"		10'-0"	13 1/8"	11 3/4"					6'-15' [12'-0"]			
18-3-100			17'-0"		13 5/8"									NONE	25'-0", [30'-0"]		
19-3-100			30'-0"		11 3/4"		10'-0"	13 1/8"	11 3/4"					6'-15' [12'-0"]			
19A-3-100			35'-0"		11"	0.3125"	15'-0"		11"					6'-15' [15'-0"]			
23-3-100			17'-0"		13 5/8"	0.2391" OR 0.25"								NONE	35'-0"		
24-3-100			30'-0"		11 3/4"	0.3125"	10'-0"	13 1/8"	11 3/4"					6'-15' [12'-0"]			
24A-3-100			35'-0"		11"		15'-0"		11"					6'-15' [15'-0"]			
26-3-100			30'-0"	18"	13 3/4"		10'-0"	15 1/8"	13 3/4"	2'-1"	1'-11"			6'-15' [12'-0"]	40'-0", [45'-0"]		13'-0"
26A-3-100			35'-0"		13"		15'-0"		13"					6'-15' [15'-0"]			
27-3-100			17'-0"		15 5/8"									NONE			

[ ] INDICATES MAST ARM LENGTH TO BE USED UNLESS OTHERWISE NOTED ON PLANS.

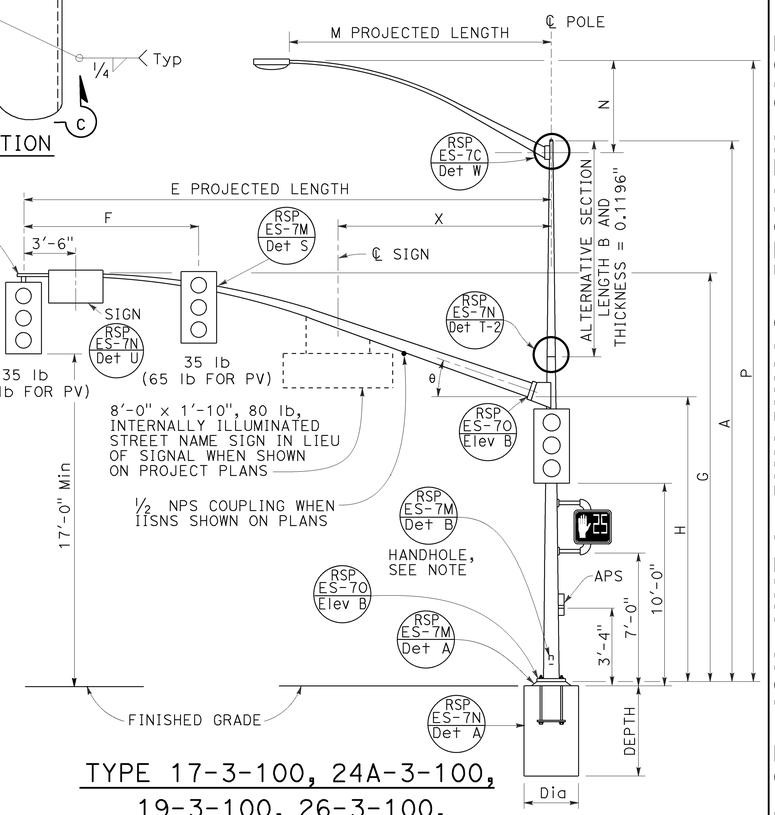

TYPE 17-3-100, 24A-3-100, 19-3-100, 26-3-100, 19A-3-100, 26A-3-100, 24-3-100
ELEVATION B

STATE OF CALIFORNIA
DEPARTMENT OF TRANSPORTATION

ELECTRICAL SYSTEMS (SIGNAL AND LIGHTING STANDARD, CASE 3 SIGNAL MAST ARM LOADING, WIND VELOCITY=100 MPH AND SIGNAL MAST ARM LENGTHS 15' TO 45')

NO SCALE

RSP ES-7E DATED JULY 15, 2016 SUPERSEDES RSP ES-7E DATED OCTOBER 30, 2015 AND RSP ES-7E DATED JULY 19, 2013 AND STANDARD PLAN ES-7E DATED MAY 20, 2011 - PAGE 466 OF THE STANDARD PLANS BOOK DATED 2010.

REVISED STANDARD PLAN RSP ES-7E

2010 REVISED STANDARD PLAN RSP ES-7E

6-20-16

Dist	COUNTY	ROUTE	POST MILES TOTAL PROJECT	SHEET No.	TOTAL SHEETS
07	LA	1	2.4/7.2	193	200

REGISTERED CIVIL ENGINEER

July 15, 2016
PLANS APPROVAL DATE

REGISTERED PROFESSIONAL ENGINEER Stanley P. Johnson No. C57793 Exp. 3-31-18 CIVIL STATE OF CALIFORNIA

THE STATE OF CALIFORNIA OR ITS OFFICERS OR AGENTS SHALL NOT BE RESPONSIBLE FOR THE ACCURACY OR COMPLETENESS OF SCANNED COPIES OF THIS PLAN SHEET.

TO ACCOMPANY PLANS DATED 6-30-16

2010 REVISED STANDARD PLAN RSP ES-7M

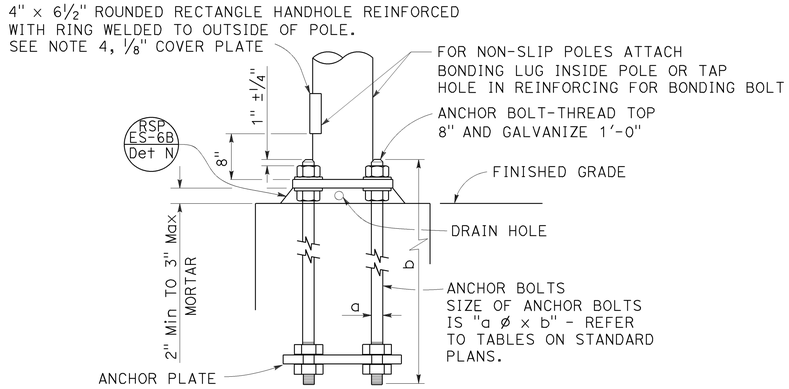

HANDHOLE AND ANCHORAGE
DETAIL A

IDENTIFICATION NUMBER

1. Attach a stamped metal tag with pole's identification number above the handhole. ¼" high number, minimum.
2. Attach a stamped metal tag with mast arm's identification number to the bottom of the signal mast arm near the pole plate. ¼" high number, minimum.

Type	Load case (Use SL for special load case)	Design wind velocity (mph)	Signal mast arm length (ft)	Near handhole: Maximum signal mast arm length for pole type / Near pole plate: Installed signal mast arm length	Standard plan year	Only for poles or mast arms using Detail F	Only for poles or mast arms using RSP ES-70
26A	3	100	45	10	F	or	FB

SAMPLE IDENTIFICATION NUMBER

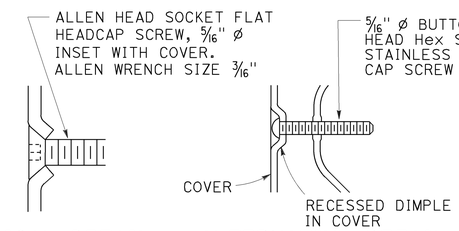

TYPICAL DETAIL
DETAIL B-1

ALTERNATIVE DETAIL
DETAIL B-2

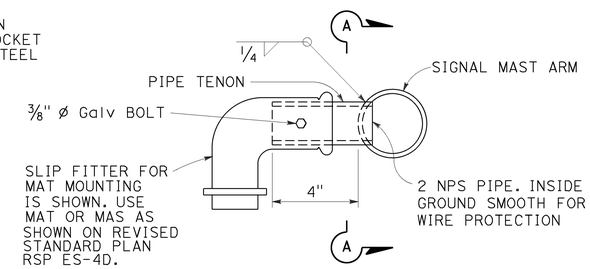

SIDE TENON
DETAIL S-1

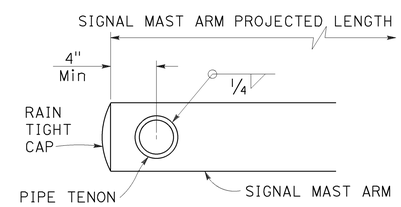

SECTION A-A

PIPE TENONS
DETAIL S

WELD SIZE	WALL THICKNESS
⅜"	0.1196"
¼"	0.1793"
5/16"	0.2391"
⅜"	0.3125"
7/16"	0.375"

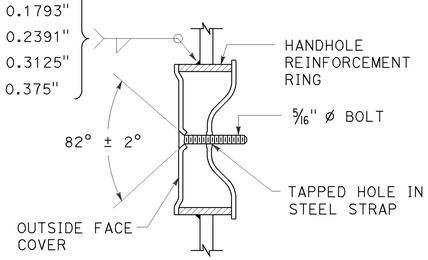

TAMPER RESISTANT HANDHOLE COVER
DETAIL B

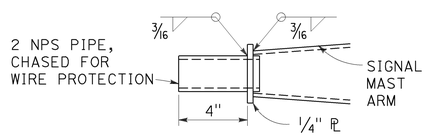

TIP TENON
DETAIL TL

This detail supersedes Detail S when so designated

WELD SIZE	WALL THICKNESS
⅛"	0.1196"
3/16"	0.1793"
¼"	0.2391"

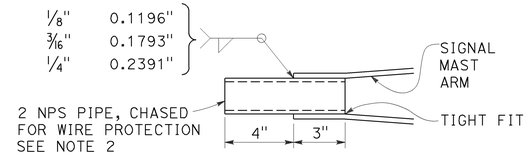

TIP TENON
DETAIL TS

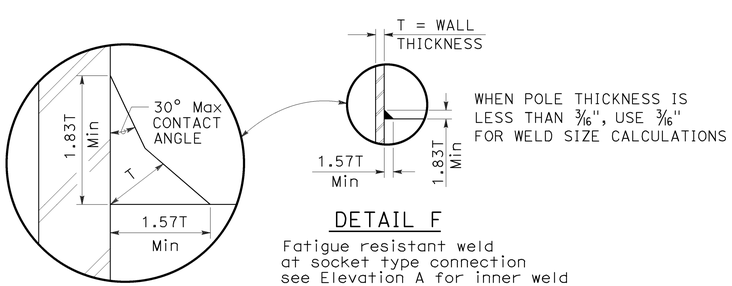

DETAIL F

Fatigue resistant weld at socket type connection see Elevation A for inner weld

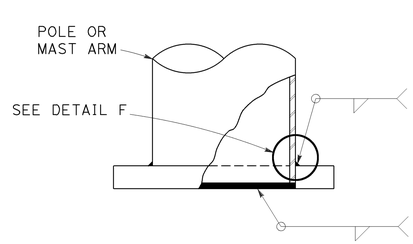

WELD SIZE	WALL THICKNESS
¼"	0.1196"
5/16"	0.1793"
⅜"	0.2391"
7/16"	0.3125"

⅛"	0.1196"
3/16"	0.1793"
¼"	0.2391"
5/16"	0.3125"

ELEVATION A

NOTES:

1. Provide a Hex nut, leveling nut and 2 washers for each bolt.
2. Luminaire mast arms shall be round, tapered steel tubes, taper of 0.1375" to 0.143-inch per foot with an end section 2⅜" OD for mounting hardware. Extensions of 2 NPS Standard pipe and 7" long may be used at the option of the manufacturer. When low pressure sodium luminaires are required, the extension shall be 1'-3".
3. Signal mast arms shall be round, tapered steel tubes, maximum taper 0.143-inch per foot.
4. Handhole reinforcement ring shall be ¼" x 2" for 0.1196" to 0.2391" thick poles, ⅜" x 2" for 0.3125" to 0.375" thick poles.
5. Handholes shall be located on the downstream side of traffic.
6. Detail F, fatigue resistant weld, is required at socket welded signal mast arm plate and pole base plate.
7. Cap screws shall be tightened by the turn-of-nut method ⅓ turn from a snug tight condition. No washer will be required.
8. Outside diameter, wall thickness, and corresponding section properties of poles and mast arms as shown in the Standard Plans are minimums. Unless otherwise specified, alternative sections shall require approval by the Engineer.
9. Design: AASHTO Standard Specifications for Structural Support for Highway Signs, Luminaires, and Traffic Signals, 6th Edition. Basic Wind Speed = 100 mph (3 seconds gust). Yearly Mean Wind Velocity = 15.6 mph.
10. Materials (Structural steel):
    fy = 55,000 psi (tapered steel tube and anchor bolts)
    fy = 50,000 psi (unless otherwise noted)
11. Materials (Reinforced concrete):
    f'c = 3,625 psi
    fy = 60,000 psi

STATE OF CALIFORNIA
DEPARTMENT OF TRANSPORTATION

ELECTRICAL SYSTEMS (SIGNAL AND LIGHTING STANDARD, DETAIL No. 1)

NO SCALE

RSP ES-7M DATED JULY 15, 2016 SUPERSEDES RSP ES-7M DATED OCTOBER 30, 2015 AND STANDARD PLAN ES-7M DATED MAY 20, 2011 - PAGE 474 OF THE STANDARD PLANS BOOK DATED 2010.

REVISED STANDARD PLAN RSP ES-7M

6-20-16

Dist	COUNTY	ROUTE	POST MILES TOTAL PROJECT	SHEET No.	TOTAL SHEETS
07	LA	1	2.4/7.2	194	200

REGISTERED CIVIL ENGINEER

July 15, 2016
PLANS APPROVAL DATE

REGISTERED PROFESSIONAL ENGINEER
Stanley P. Johnson
No. C57793
Exp. 3-31-18
CIVIL
STATE OF CALIFORNIA

THE STATE OF CALIFORNIA OR ITS OFFICERS OR AGENTS SHALL NOT BE RESPONSIBLE FOR THE ACCURACY OR COMPLETENESS OF SCANNED COPIES OF THIS PLAN SHEET.

TO ACCOMPANY PLANS DATED 6-30-16

2010 REVISED STANDARD PLAN RSP ES-7N

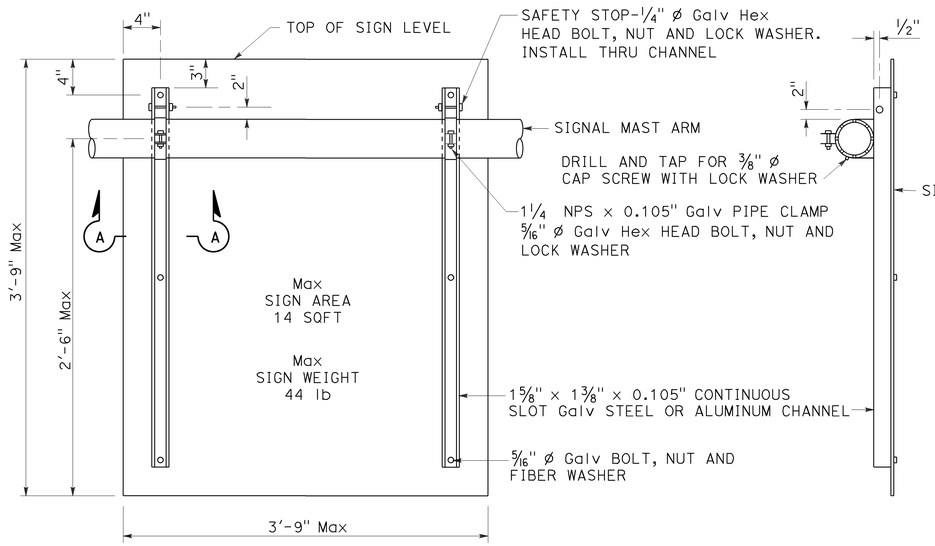

REAR VIEW

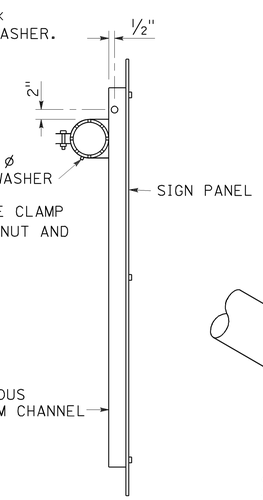

SIDE VIEW

SIGN MOUNTING DETAILS
DETAIL U

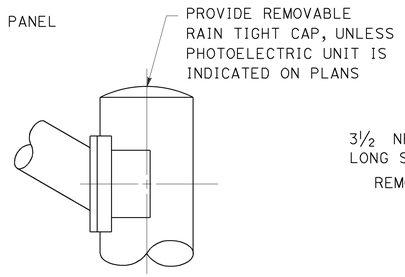

STANDARD TOP
DETAIL B-1

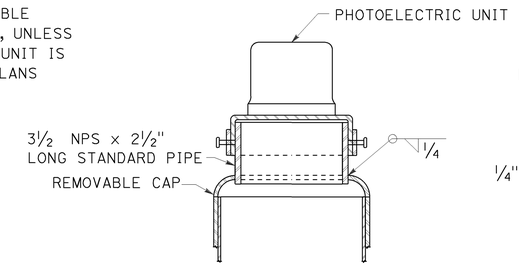

MOUNTING ADAPTER FOR
PHOTOELECTRIC UNIT
DETAIL B-2

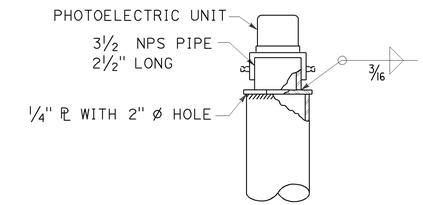

ALTERNATIVE
MOUNTING ADAPTER
DETAIL B-3

POLE TOP DETAILS
DETAIL B

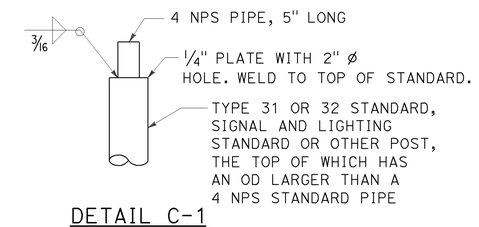

DETAIL C-1

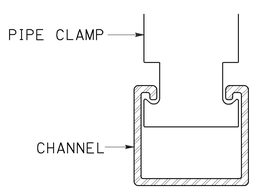

SECTION A-A

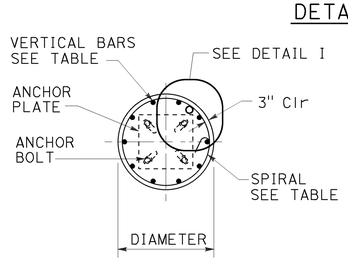

SECTION B-B

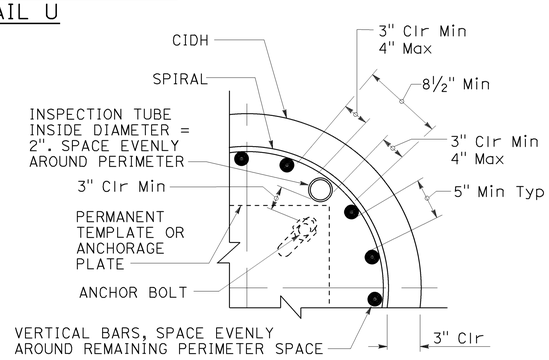

INSPECTION TUBE PLACEMENT
DETAIL I

CIDH REINFORCING AND INSPECTION TUBE SCHEDULE			
CIDH DIAMETER	VERTICAL BARS	SPIRAL	INSPECTION TUBE
2 ft	8-#5	#4 AT 6	2
2.5 ft	10-#6		4*
3 ft	12-#7	#5 AT 6	
3.5 ft	14-#8		4
4 ft	18-#9	2-#4 AT 7	5
4.5 ft	18-#9	2-#5 AT 7	5
5 ft	22-#10	2-#5 AT 7	6
6 ft	26-#11	2-#6 AT 7	7

* FOR SLIP BASE VERSIONS WITH 3 ANCHOR BOLTS USE 3 INSPECTION TUBES.

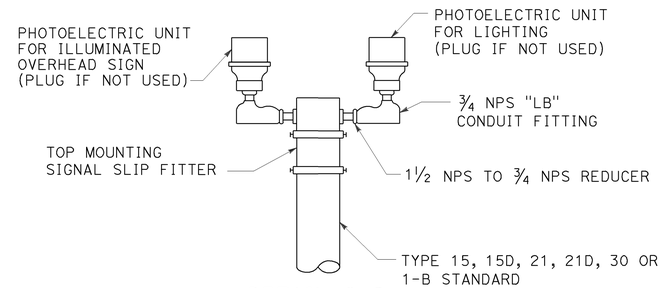

DETAIL C-2

DUAL PHOTOELECTRIC UNIT MOUNTING DETAIL
DETAIL C

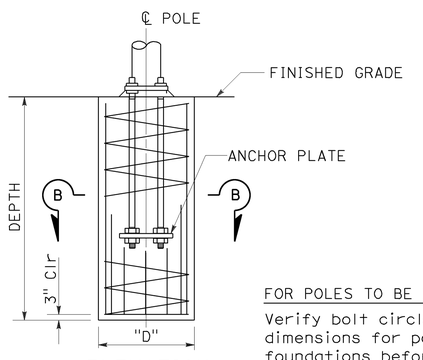

ELEVATION

FOR POLES TO BE INSTALLED ON EXISTING FOUNDATION:
Verify bolt circles, anchor bolt sizes and dependent dimensions for poles to be installed on existing foundations before fabricating the poles.

CAST-IN-DRILLED-HOLE PILE FOUNDATION, REINFORCED PILE
DETAIL A

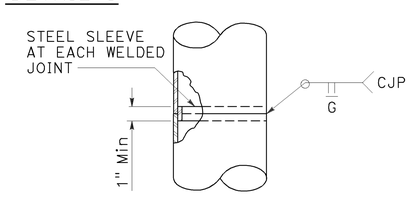

FOR UNIFORM TUBE THICKNESS
DETAIL T-1

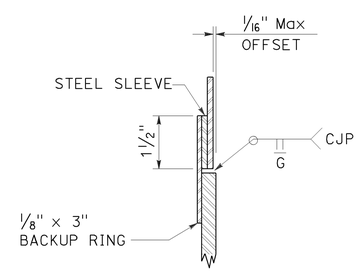

AT TUBE THICKNESS CHANGE
DETAIL T-2

POLE SPLICES
DETAIL T

STATE OF CALIFORNIA
DEPARTMENT OF TRANSPORTATION

ELECTRICAL SYSTEMS (SIGNAL AND LIGHTING STANDARD, DETAIL No. 2)

NO SCALE

RSP ES-7N DATED JULY 15, 2016 SUPERSEDES RSP ES-7N DATED OCTOBER 30, 2015 AND STANDARD PLAN ES-7N DATED MAY 20, 2011 - PAGE 475 OF THE STANDARD PLANS BOOK DATED 2010.

REVISED STANDARD PLAN RSP ES-7N

6-20-16

DIST	COUNTY	ROUTE	POST MILES TOTAL PROJECT	SHEET NO.	TOTAL SHEETS
07	LA	1	2.4/7.2	195	200

Theresa Gabriel
REGISTERED ELECTRICAL ENGINEER

April 15, 2016
PLANS APPROVAL DATE

REGISTERED PROFESSIONAL ENGINEER Theresa Aziz Gabriel No. E15129 Exp. 6-30-16 ELECTRICAL STATE OF CALIFORNIA

THE STATE OF CALIFORNIA OR ITS OFFICERS OR AGENTS SHALL NOT BE RESPONSIBLE FOR THE ACCURACY OR COMPLETENESS OF SCANNED COPIES OF THIS PLAN SHEET.

TO ACCOMPANY PLANS DATED 6-30-16

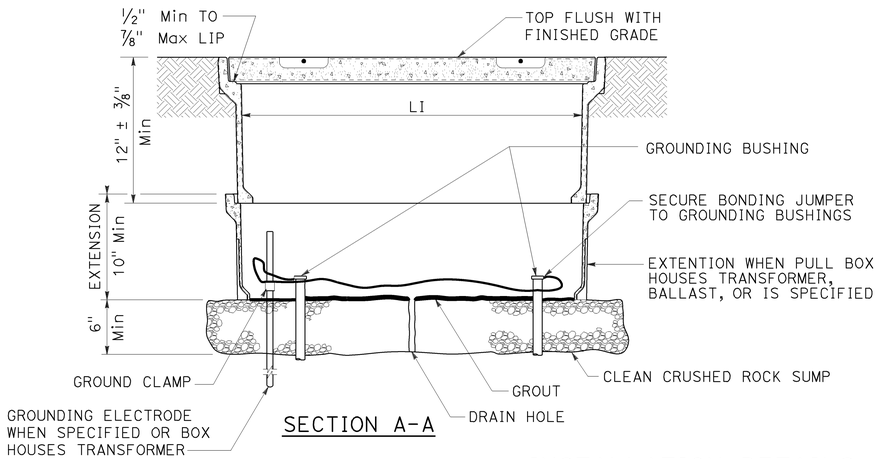

SECTION A-A

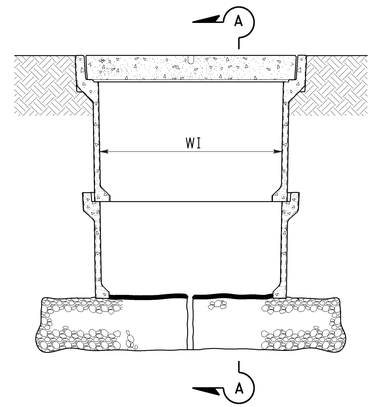

SIDE VIEW

INSTALLATION DETAILS

DETAIL A

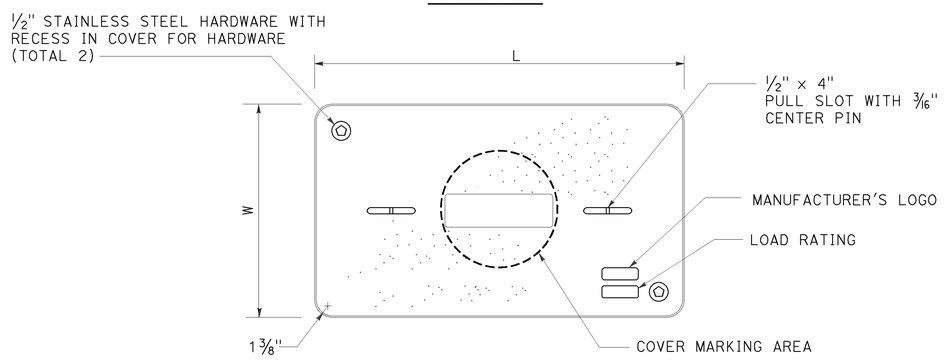

COVER TOP VIEW

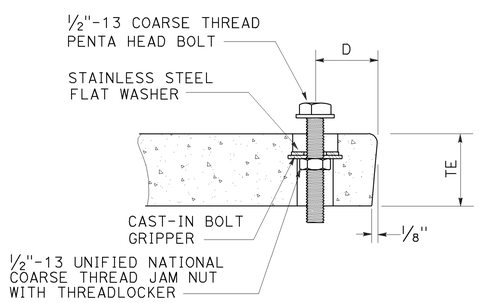

TYPICAL COVER CAPTIVE BOLT

OR SIMILAR

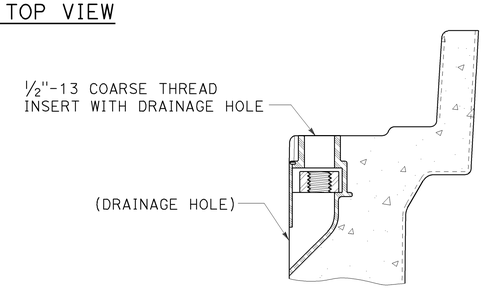

TYPICAL THREADED INSERT

OR SIMILAR

NOTES:

1. The nominal dimensions of the opening in which the cover sets shall be the same as the cover dimensions except the length and width dimensions shall be 1/8" greater.
2. Covers and boxes shall be interchangeable with California standard male and female gages. When interchanged with a standard male or female gage, the top surfaces shall be flush within 1/8". Top outside radius of covers and pull boxes shall have a 1/8" radius.
3. Dimensions for the cover for non-traffic pull box are nominal values.

DIMENSION TABLE

PULL BOX	PULL BOX					COVER				
	MINIMUM DEPTH BOX	MINIMUM DEPTH EXTENSION	MINIMUM WEIGHT	LI Min	WI Min	TE	D	L	W	MINIMUM WEIGHT
No. 3 1/2	12"	N/A	40 lb	1' - 3"	9"	1 3/4"	1 3/4"	1'-3 1/4" - 1'-3 3/8"	10" - 10 1/8"	30 lb
No. 5	12"	10"	55 lb	1' - 8"	11"	2"	1 3/4"	1'-11 1/4"	1'-1 3/4"	60 lb
No. 6	12"	10"	70 lb	2' - 4 1/4"	1' - 3 1/4"	2"	2"	2'-6 1/2"	1'-5 1/2"	85 lb

STATE OF CALIFORNIA
DEPARTMENT OF TRANSPORTATION

ELECTRICAL SYSTEMS (NON-TRAFFIC PULL BOX)

NO SCALE

RSP ES-8A DATED APRIL 15, 2016 SUPERSEDES RSP ES-8A
DATED OCTOBER 30, 2015 AND RSP ES-8A DATED JULY 19, 2013 AND RSP ES-8A
DATED JANUARY 20, 2012 THAT SUPPLEMENTS THE STANDARD PLANS BOOK DATED 2010.

REVISED STANDARD PLAN RSP ES-8A

2010 REVISED STANDARD PLAN RSP ES-8A

1-22-16

Dist	COUNTY	ROUTE	POST MILES TOTAL PROJECT	SHEET No.	TOTAL SHEETS
07	LA	1	2.4/7.2	196	200

Theresa Gabriel
REGISTERED ELECTRICAL ENGINEER

October 30, 2015
PLANS APPROVAL DATE

REGISTERED PROFESSIONAL ENGINEER
Theresa Aziz Gabriel
No. E15129
Exp. 6-30-16
ELECTRICAL
STATE OF CALIFORNIA

THE STATE OF CALIFORNIA OR ITS OFFICERS OR AGENTS SHALL NOT BE RESPONSIBLE FOR THE ACCURACY OR COMPLETENESS OF SCANNED COPIES OF THIS PLAN SHEET.

TO ACCOMPANY PLANS DATED 6-30-16

NOTE:
Curves represent the minimum footcandle (FC).

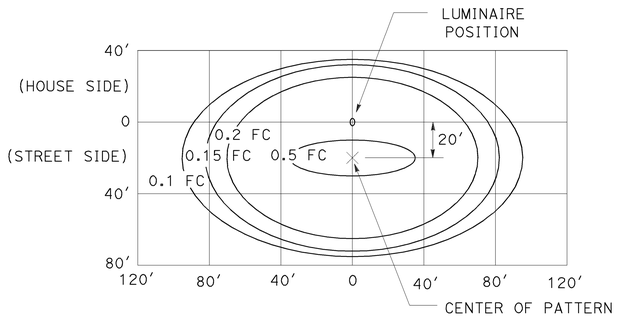

LED LUMINAIRE 165 W
34′ Mounting Height

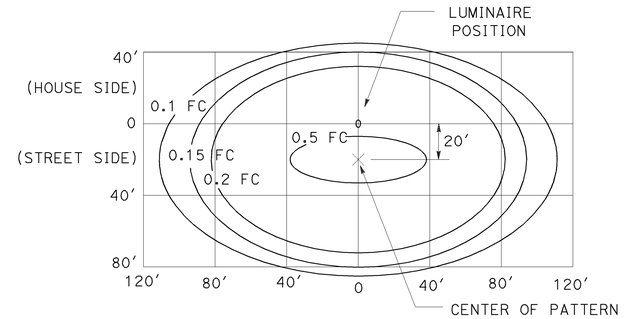

LED LUMINAIRE 235 W
40′ Mounting Height

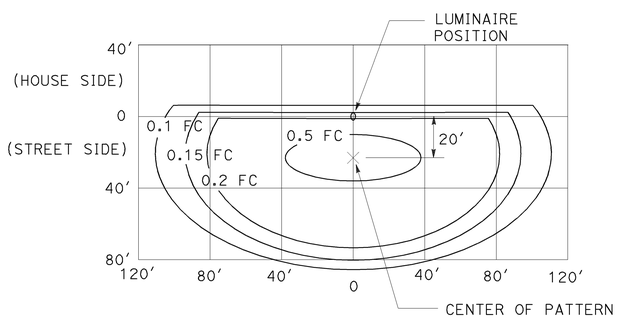

LED LUMINAIRE 235 W
40′ Mounting Height
with back side control

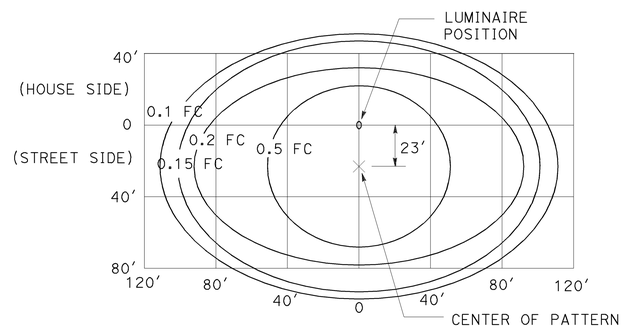

LED LUMINAIRE 300 W
40′ Mounting Height

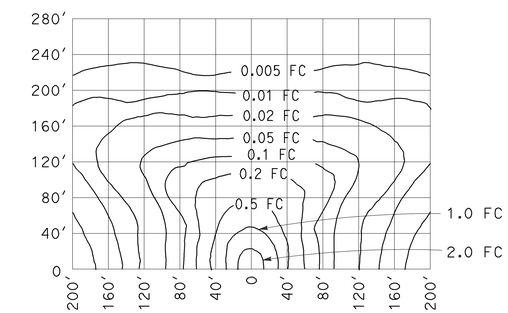

LOW-PRESSURE SODIUM LUMINAIRE 180 W
40′ Mounting Height
Lamp operated at 33,000 lm

STATE OF CALIFORNIA
DEPARTMENT OF TRANSPORTATION

ELECTRICAL SYSTEMS (ISOFOOTCANDLE CURVES)

NO SCALE

RSP ES-10A DATED OCTOBER 30, 2015 SUPERSEDES RSP ES-10A DATED JULY 19, 2013 THAT SUPPLEMENTS THE STANDARD PLANS BOOK DATED 2010.

REVISED STANDARD PLAN RSP ES-10A

2010 REVISED STANDARD PLAN RSP ES-10A

9-29-15

Dist	COUNTY	ROUTE	POST MILES TOTAL PROJECT	SHEET No.	TOTAL SHEETS
07	LA	1	2.4/7.2	197	200

REGISTERED CIVIL ENGINEER

July 15, 2016
PLANS APPROVAL DATE

REGISTERED PROFESSIONAL ENGINEER
Stanley P. Johnson
No. C57793
Exp. 3-31-18
CIVIL
STATE OF CALIFORNIA

THE STATE OF CALIFORNIA OR ITS OFFICERS OR AGENTS SHALL NOT BE RESPONSIBLE FOR THE ACCURACY OR COMPLETENESS OF SCANNED COPIES OF THIS PLAN SHEET.

TO ACCOMPANY PLANS DATED 6-30-16

2010 REVISED STANDARD PLAN RSP ES-11

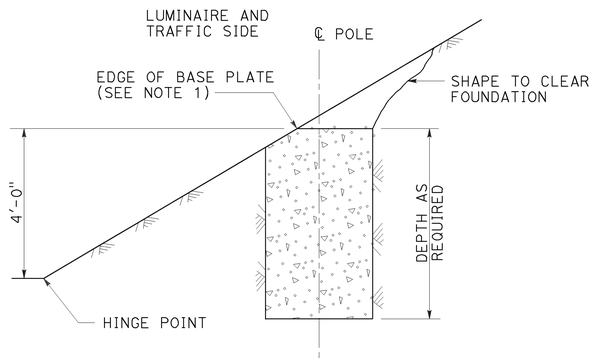

CUT SLOPES
STEEPER THAN 4:1,
LESS THAN 2:1
DETAIL A-1
See Note 2 and 3

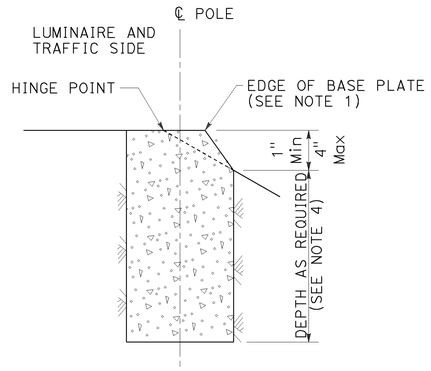

FILL SLOPES
STEEPER THAN 4:1,
LESS THAN 2:1
DETAIL A-2
See Note 2 and 3

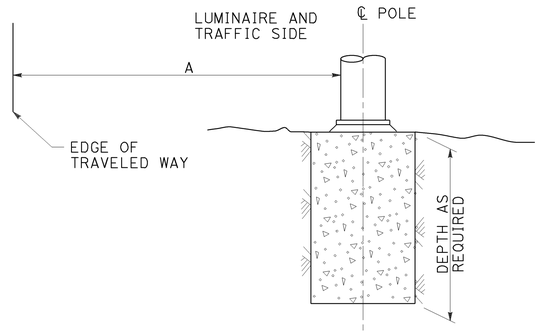

FLAT SECTIONS, CUT OR FILL SLOPES
4:1 OR FLATTER
DETAIL A-3
See Note 2

STANDARD TYPE	SETBACK (DIMENSION A)
32	30'-0" (Min)
31	20'-0" (Min)
15, 15D, 15-SB, 21, 21D, 30	ARM LENGTH (Min)

FOUNDATIONS ADJACENT TO ALL ROADWAYS EXCEPT
IN SIDEWALK, MEDIAN AND ISLAND AREAS
DETAIL A

NOTES:

1. Where a portion of the foundation is above grade, the top edges shall have a 1" chamfer.
2. Slopes shall be horizontal to vertical ratio (Horizontal : Vertical).
3. Horizontal setbacks on cut and fill slopes steeper than 4:1 shall not exceed the distance shown for flat sections.
4. CIDH embedment depth shall be increased beyond standard depths by the diameter of the CIDH.

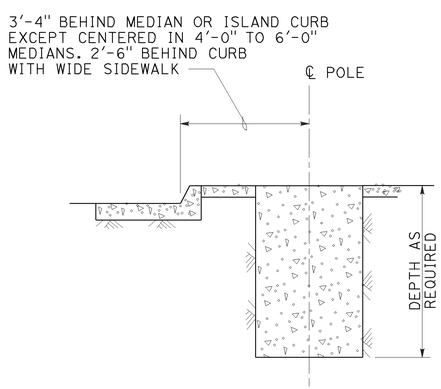

MEDIAN, ISLAND
OR WIDE SIDEWALK
DETAIL B-1
7' Wide and wider

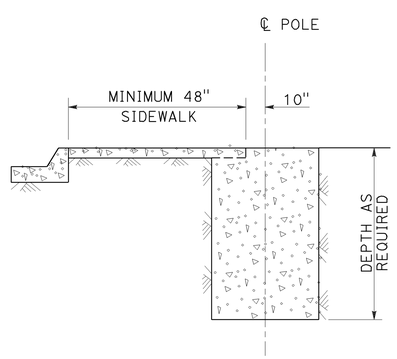

NARROW SIDEWALK
DETAIL B-2
Less than 7' wide

FOUNDATIONS IN SIDEWALK, MEDIAN AND ISLAND AREAS
DETAIL B

STATE OF CALIFORNIA
DEPARTMENT OF TRANSPORTATION

ELECTRICAL SYSTEMS (FOUNDATION INSTALLATIONS)

NO SCALE

RSP ES-11 DATED JULY 15, 2016 SUPERSEDES RSP ES-11 DATED JULY 19, 2013 AND STANDARD PLAN ES-11 DATED MAY 20, 2011 - PAGE 488 OF THE STANDARD PLANS BOOK DATED 2010.

REVISED STANDARD PLAN RSP ES-11

6-20-16

Dist	COUNTY	ROUTE	POST MILES TOTAL PROJECT	SHEET No.	TOTAL SHEETS
07	LA	1	2.4/7.2	198	200

Theresa Gabriel
REGISTERED ELECTRICAL ENGINEER

April 15, 2016
PLANS APPROVAL DATE

REGISTERED PROFESSIONAL ENGINEER
Theresa Aziz Gabriel
No. E15129
Exp. 6-30-16
ELECTRICAL
STATE OF CALIFORNIA

THE STATE OF CALIFORNIA OR ITS OFFICERS OR AGENTS SHALL NOT BE RESPONSIBLE FOR THE ACCURACY OR COMPLETENESS OF SCANNED COPIES OF THIS PLAN SHEET.

TO ACCOMPANY PLANS DATED 6-30-16

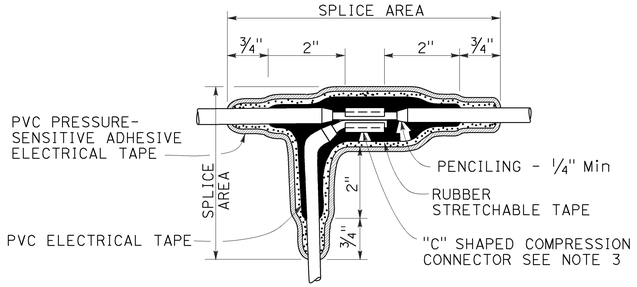

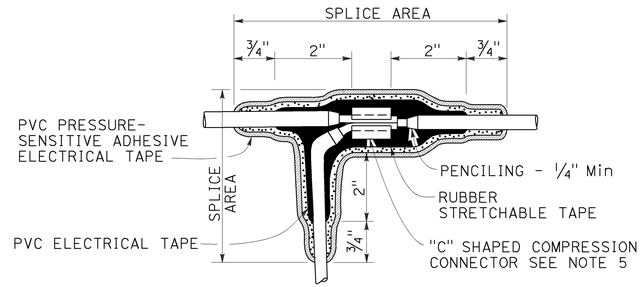

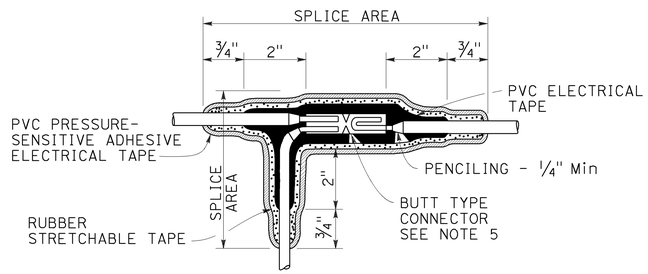

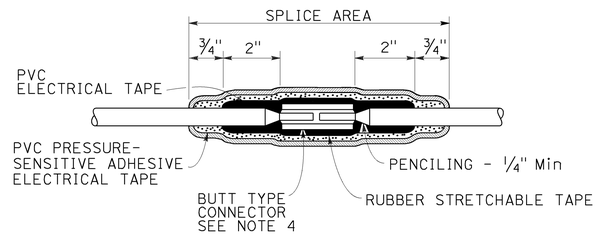

NOTES:

1. Dimensions are minimum.
2. Rubber tapes shall be rolled after application.
3. Between 1 free-end and 1 through conductor.
4. Between 2 free-end conductors.
5. Between 3 free-end conductors.

TYPICAL SPLICE INSULATION METHOD B

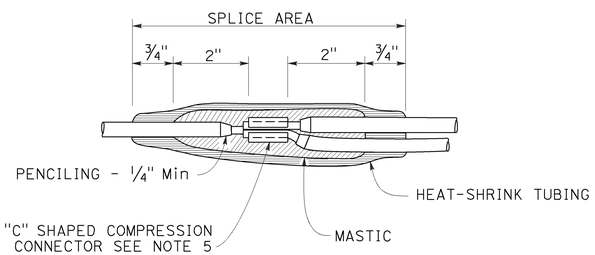

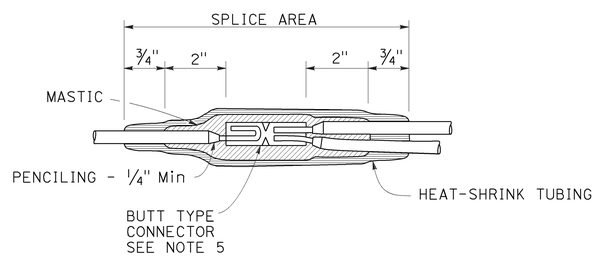

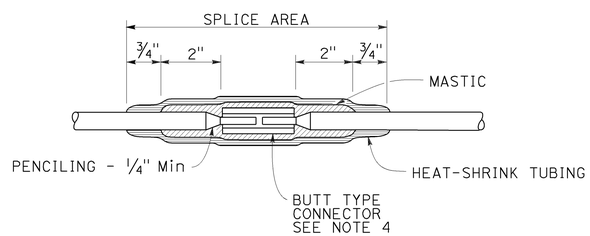

TYPICAL SPLICE INSULATION HEAT-SHRINK TUBING

STATE OF CALIFORNIA
DEPARTMENT OF TRANSPORTATION

ELECTRICAL SYSTEMS (SPLICE INSULATION METHODS DETAILS)

NO SCALE

RSP ES-13A DATED APRIL 15, 2016 SUPERSEDES RSP ES-13A DATED OCTOBER 30, 2015 AND STANDARD PLAN ES-13A DATED MAY 20, 2011 - PAGE 491 OF THE STANDARD PLANS BOOK DATED 2010.

REVISED STANDARD PLAN RSP ES-13A

2010 REVISED STANDARD PLAN RSP ES-13A

1-22-16

Dist	COUNTY	ROUTE	POST MILES TOTAL PROJECT	SHEET No.	TOTAL SHEETS
07	LA	1	2.4/7.2	199	200

Theresa Gabriel
REGISTERED ELECTRICAL ENGINEER

April 15, 2016
PLANS APPROVAL DATE

REGISTERED PROFESSIONAL ENGINEER
Theresa Aziz Gabriel
No. E15129
Exp. 6-30-16
ELECTRICAL
STATE OF CALIFORNIA

THE STATE OF CALIFORNIA OR ITS OFFICERS OR AGENTS SHALL NOT BE RESPONSIBLE FOR THE ACCURACY OR COMPLETENESS OF SCANNED COPIES OF THIS PLAN SHEET.

TO ACCOMPANY PLANS DATED 6-30-16

CIRCUIT VOLTAGE	FUSE VOLTAGE RATING	FUSE CURRENT RATING						
		HPS LAMP BALLAST		LOW PRESSURE SODIUM BALLAST	INDUCTION SIGN LIGHTING	SINGLE PHASE (TWO WIRE) TRANSFORMERS (PRIMARY SIDE)		
		70 W	100 W	180 W	85 W	1 kVA	2 kVA	3 kVA
120 V	250 V	5 A	5 A	5 A	5 A	10 A	20 A	30 A
240 V	250 V	5 A	5 A	5 A	5 A	6 A	10 A	20 A
480 V	500-600 V	5 A	5 A	3 A	1 A (SEE NOTE 2)	3 A	6 A	10 A

NOTES:

1. Primary lines of multiple ballasts shall be provided with fused connectors. Fuse ratings shall be as noted above.
2. See Revised Standard Plan RSP ES-15D, Type SC3 control.

FUSE RATINGS FOR FUSED CONNECTORS

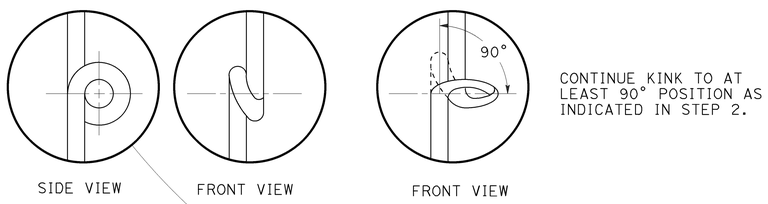

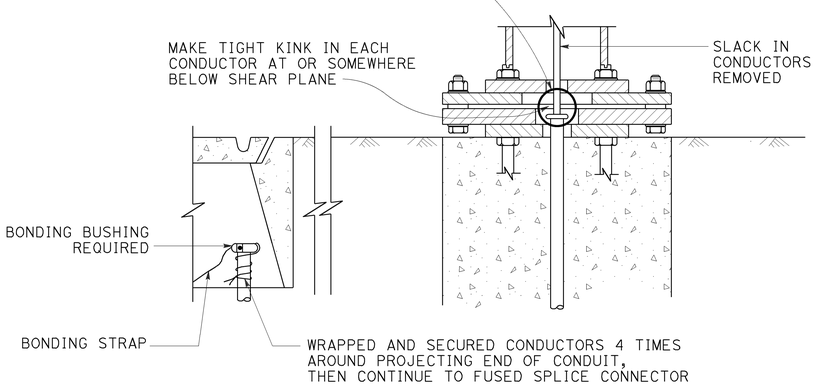

KINKING DETAIL FOR SLIP BASE STANDARDS

DETAIL A

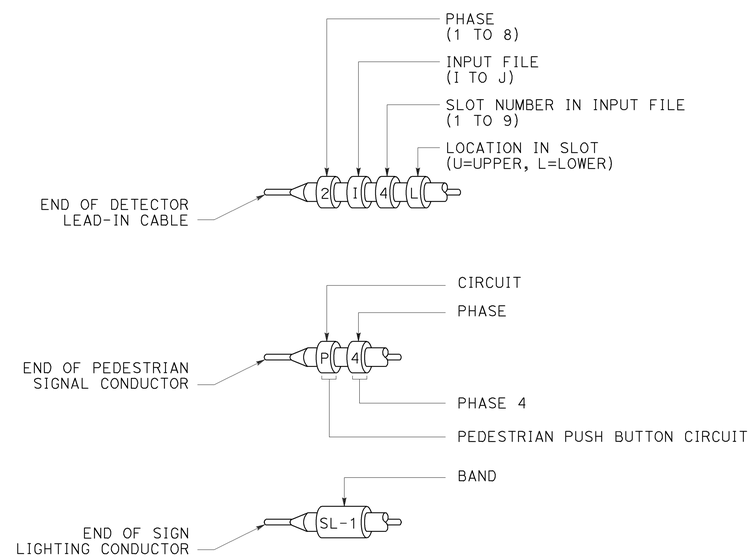

TYPICAL BANDING DETAILS

DETAIL B

STATE OF CALIFORNIA
DEPARTMENT OF TRANSPORTATION

ELECTRICAL SYSTEMS (FUSE RATING, KINKING AND BANDING DETAIL)

NO SCALE

RSP ES-13B DATED APRIL 15, 2016 SUPERSEDES STANDARD PLAN ES-13B DATED MAY 20, 2011 - PAGE 492 OF THE STANDARD PLANS BOOK DATED 2010.

REVISED STANDARD PLAN RSP ES-13B

2010 REVISED STANDARD PLAN RSP ES-13B

1-12-16

Dist	COUNTY	ROUTE	POST MILES TOTAL PROJECT	SHEET No.	TOTAL SHEETS
07	LA	1	2.4/7.2	200	200

REGISTERED CIVIL ENGINEER

July 15, 2016
PLANS APPROVAL DATE

REGISTERED PROFESSIONAL ENGINEER
Stanley P. Johnson
No. C57793
Exp. 3-31-18
CIVIL
STATE OF CALIFORNIA

THE STATE OF CALIFORNIA OR ITS OFFICERS OR AGENTS SHALL NOT BE RESPONSIBLE FOR THE ACCURACY OR COMPLETENESS OF SCANNED COPIES OF THIS PLAN SHEET.

TO ACCOMPANY PLANS DATED 6-30-16

POLE TYPE	POLE DATA				BASE PLATE DATA				CIDH	
	HEIGHT "h"	Min OD BASE	Min OD TOP	THICKNESS	"C"	THICKNESS	ANCHOR BOLT SIZE	BC = BOLT CIRCLE	Dia	"d"
CCTV 25	25′	7 3/8"	3 3/4"	0.1793"	1′-1"	1"	1 1/2" ø x 36"	11 1/2"	2′-6"	7′-0"
CCTV 30	30′	8"			1′-1 1/2"			1′-0"		7′-6"
CCTV 35	35′	8 5/8"			1′-2"			1′-1"		8′-0"
CCTV 40	40′	9 3/8"			1′-3"			1′-1 1/2"		8′-6"
CCTV 45	45′	10"						1′-2"		

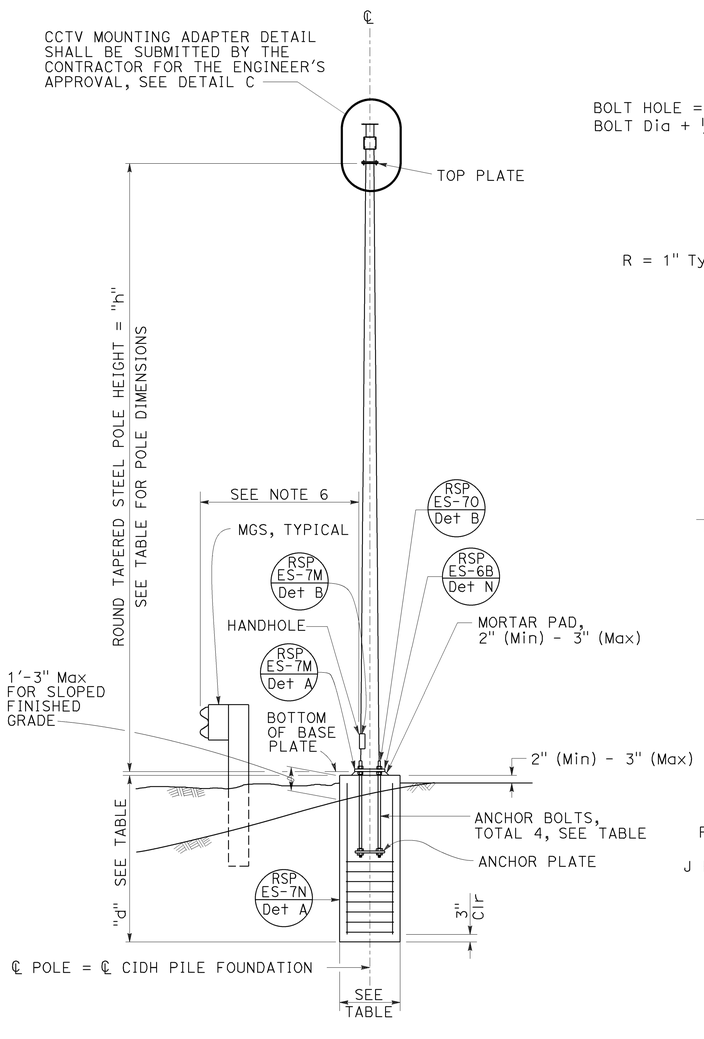

ELEVATION A

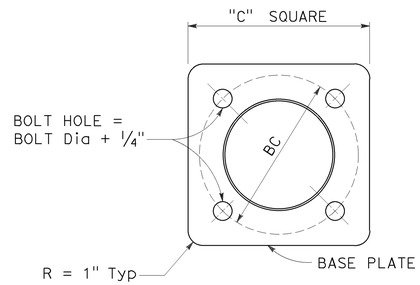

BASE PLATE

DETAIL A

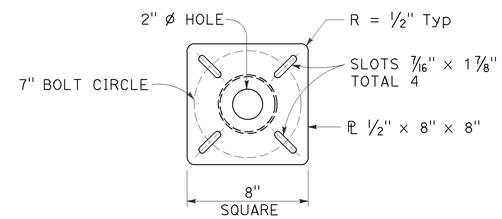

TOP PLATE

DETAIL B

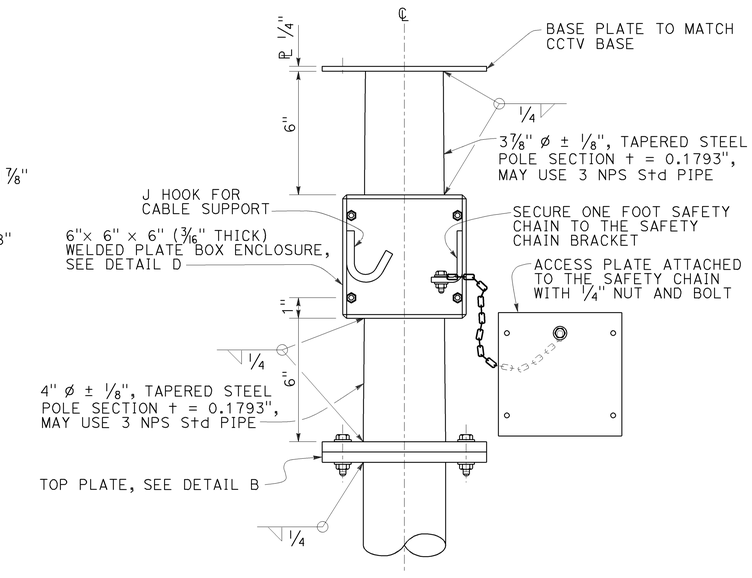

CLOSED CIRCUIT TELEVISION MOUNTING ADAPTER

DETAIL C

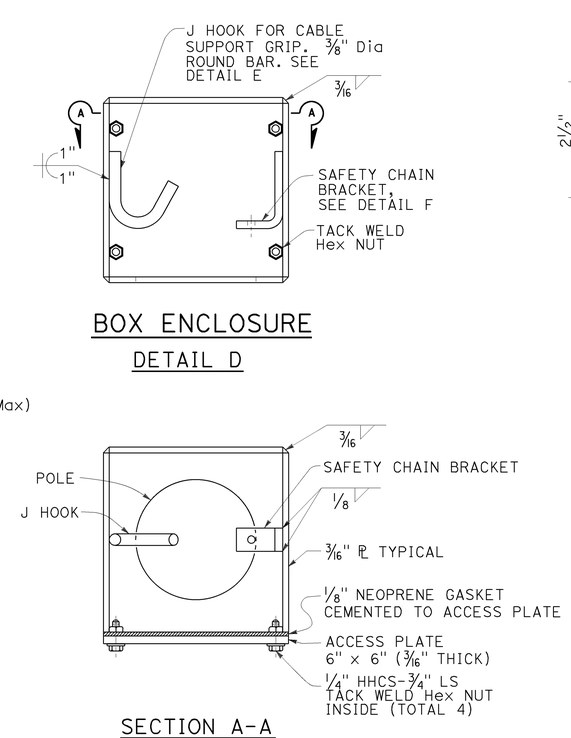

BOX ENCLOSURE

DETAIL D

SECTION A-A

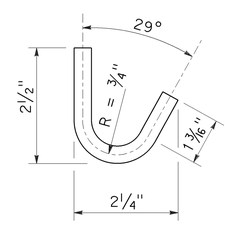

J HOOK

DETAIL E

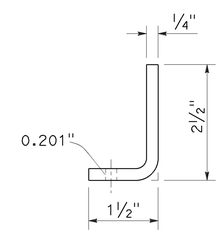

SAFETY CHAIN BRACKET

DETAIL F

NOTES:

1. Verify controlling field dimensions before ordering or fabricating any material.
2. During pole installation, the post shall be raked as necessary with the use of leveling nuts to provide a plumb pole axis.
3. For wind loading see RSP ES-7M.
4. Materials (Structural Steel):
   a. fy = 55,000 psi (tapered steel tube and anchor bolts)
   b. fy = 50,000 psi (unless otherwise noted)
5. Materials (Reinforced Concrete):
   a. f′c = 3,625 psi
   b. fy = 60,000 psi
6. See RSP A77R1 thru RSP A77R8

STATE OF CALIFORNIA
DEPARTMENT OF TRANSPORTATION

ELECTRICAL SYSTEMS (CLOSED CIRCUIT TELEVISION, 25' TO 45' POLE)

NO SCALE

RSP ES-16B DATED JULY 15, 2016 SUPERSEDES RSP ES-16B DATED OCTOBER 30, 2015 AND STANDARD PLAN ES-16B DATED MAY 20, 2011 - PAGE 501 OF THE STANDARD PLANS BOOK DATED 2010.

REVISED STANDARD PLAN RSP ES-16B

2010 REVISED STANDARD PLAN RSP ES-16B

6-20-16