Dist	COUNTY	ROUTE	POST MILES TOTAL PROJECT	SHEET No.	TOTAL SHEETS
07	LA	60	R24.4/R25.3	201	384

LICENSED LANDSCAPE ARCHITECT DATE 12-3-15

PLANS APPROVAL DATE 3-14-16

LICENSED LANDSCAPE ARCHITECT David H. Tatsumi 2837 Signature 08-31-16 Renewal Date 11-06-15 Date STATE OF CALIFORNIA

THE STATE OF CALIFORNIA OR ITS OFFICERS OR AGENTS SHALL NOT BE RESPONSIBLE FOR THE ACCURACY OR COMPLETENESS OF SCANNED COPIES OF THIS PLAN SHEET.

TATSUMI AND PARTNERS, INC.
49 DISCOVERY,
SUITE 120
IRVINE, CA 92618

CITY OF INDUSTRY
15651 EAST STAFFORD STREET
CITY OF INDUSTRY, CA 91744

NOTE:

1. FOR ACCURATE RIGHT OF WAY DATA, CONTACT RIGHT OF WAY ENGINEERING AT THE DISTRICT OFFICE.

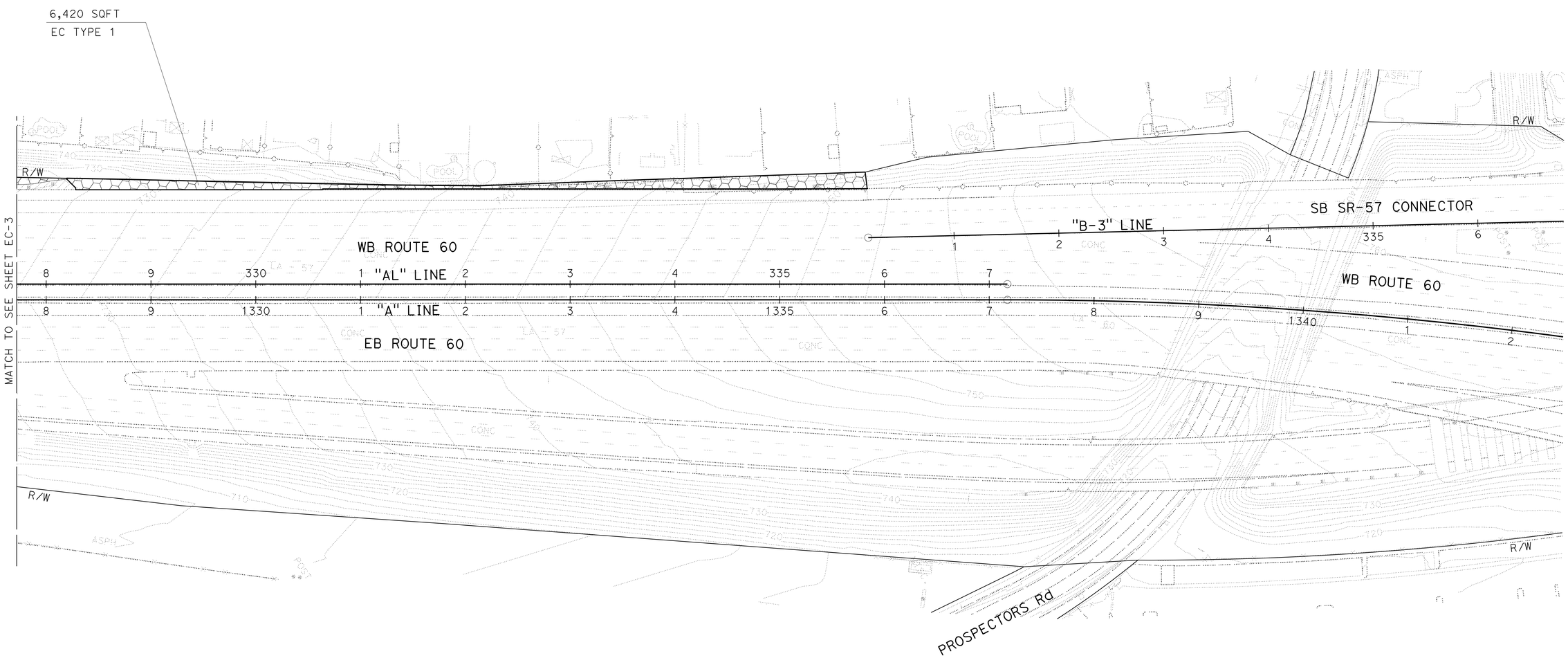

EROSION CONTROL PLAN

SCALE 1" = 50'

EC-4

APPROVED FOR EROSION CONTROL WORK ONLY

STATE OF CALIFORNIA - DEPARTMENT OF TRANSPORTATION

Caltrans®

DESIGN

PROJECT LANDSCAPE ARCHITECT: DAVID H. TATSUMI

CALCULATED-DESIGNED BY: J. OGATA

CHECKED BY: M. ACEVES

REVISED BY

DATE REVISED

LAST REVISION 11-06-15

DATE PLOTTED => $DATE$

TIME PLOTTED => $TIME$

Dist	COUNTY	ROUTE	POST MILES TOTAL PROJECT	SHEET No.	TOTAL SHEETS
07	LA	60	R24.4/R25.3	202	384

12-3-15
LICENSED LANDSCAPE ARCHITECT DATE

3-14-16
PLANS APPROVAL DATE

LICENSED LANDSCAPE ARCHITECT David H. Tatsumi 2837 Signature 08-31-16 Renewal Date 11-06-15 Date STATE OF CALIFORNIA

THE STATE OF CALIFORNIA OR ITS OFFICERS OR AGENTS SHALL NOT BE RESPONSIBLE FOR THE ACCURACY OR COMPLETENESS OF SCANNED COPIES OF THIS PLAN SHEET.

TATSUMI AND PARTNERS, INC.
49 DISCOVERY,
SUITE 120
IRVINE, CA 92618

CITY OF INDUSTRY
15651 EAST STAFFORD STREET
CITY OF INDUSTRY, CA 91744

EROSION CONTROL QUANTITIES

SHEET	DESCRIPTION	COMPOST	HYDROSEED	BONDED FIBER MATRIX	HYDROMULCH	ORGANIC FERTILIZER
		SQFT	SQFT	SQFT	SQFT	LB/ACRE
EC-1	EROSION CONTROL TYPE 1	163,190	163,190	163,190	-	2,970
EC-2	EROSION CONTROL TYPE 1	46,750	46,750	46,750	-	880
	EROSION CONTROL TYPE 2	2,035	2,035	-	2,035	
EC-3	EROSION CONTROL TYPE 1	30,545	30,545	30,545	-	570
	EROSION CONTROL TYPE 2	1,350	1,350	-	1,350	
EC-4	EROSION CONTROL TYPE 1	6,420	6,420	6,420	-	100
	TOTAL	250,290	250,290	246,905	3,385	4,520 LB/ACRE

EROSION CONTROL QUANTITIES
ECQ-1

STATE OF CALIFORNIA - DEPARTMENT OF TRANSPORTATION
Caltrans
DESIGN

PROJECT LANDSCAPE ARCHITECT: DAVID H. TATSUMI
CALCULATED-DESIGNED BY: J. OGATA
CHECKED BY: M. ACEVES
REVISED BY
DATE REVISED

LAST REVISION 11-06-15 | DATE PLOTTED => $DATE$ TIME PLOTTED => $TIME$

Dist	COUNTY	ROUTE	POST MILES TOTAL PROJECT	SHEET No.	TOTAL SHEETS
07	LA	60	R24.4/R25.3	203	384

REGISTERED CIVIL ENGINEER 1-15-16 DATE

3-14-16
PLANS APPROVAL DATE

REGISTERED PROFESSIONAL ENGINEER WILLIAM SUN No. 57664 Exp. 12/31/17 CIVIL STATE OF CALIFORNIA

THE STATE OF CALIFORNIA OR ITS OFFICERS OR AGENTS SHALL NOT BE RESPONSIBLE FOR THE ACCURACY OR COMPLETENESS OF SCANNED COPIES OF THIS PLAN SHEET.

LIN CONSULTING, INC.
21660 E. COPLEY DRIVE
#270
DIAMOND BAR, CA 91765

CITY OF INDUSTRY
15651 E. STAFFORD STREET
CITY OF INDUSTRY, CA 91744

NOTE: (THIS SHEET ONLY)
FOR ACCURATE RIGHT OF WAY DATA, CONTACT RIGHT OF WAY ENGINEERING AT THE DISTRICT OFFICE.

LEGEND: (THIS SHEET ONLY)

- WORK AREA
- WOOD POLE WITH 12 FOOT MAST ARM LED (310 W HPS EQUIVALENT) LUMINAIRE (SEE TEMPORARY WOOD POLES SHEET FOR TEMPORARY LIGHTING DETAILS)
- 1 INSTALL 2#4, 1#8 (G) OVERHEAD
- 2 INSTALL OVERHEAD LINE WITH A MINIMUM OF 25 FEET CLEARANCE ABOVE RAMP SURFACE AND PROVIDE DEAD-END ASSEMBLIES AS NEEDED
- 3 EXISTING 3" C, 2#4, 1#8 (G)
- 4 EXISTING 2" C, 4#4, 1#8 (G)
- 5 INSTALL 2" C, 2#4, 1#8 (G)
- 6 EXISTING 2" C, 2#4, 1#8 (G) IN CONCRETE BARRIER
- 7 INSTALL 2#4, 1#8 (G) IN 2" CONDUIT (TYPE H) RISER

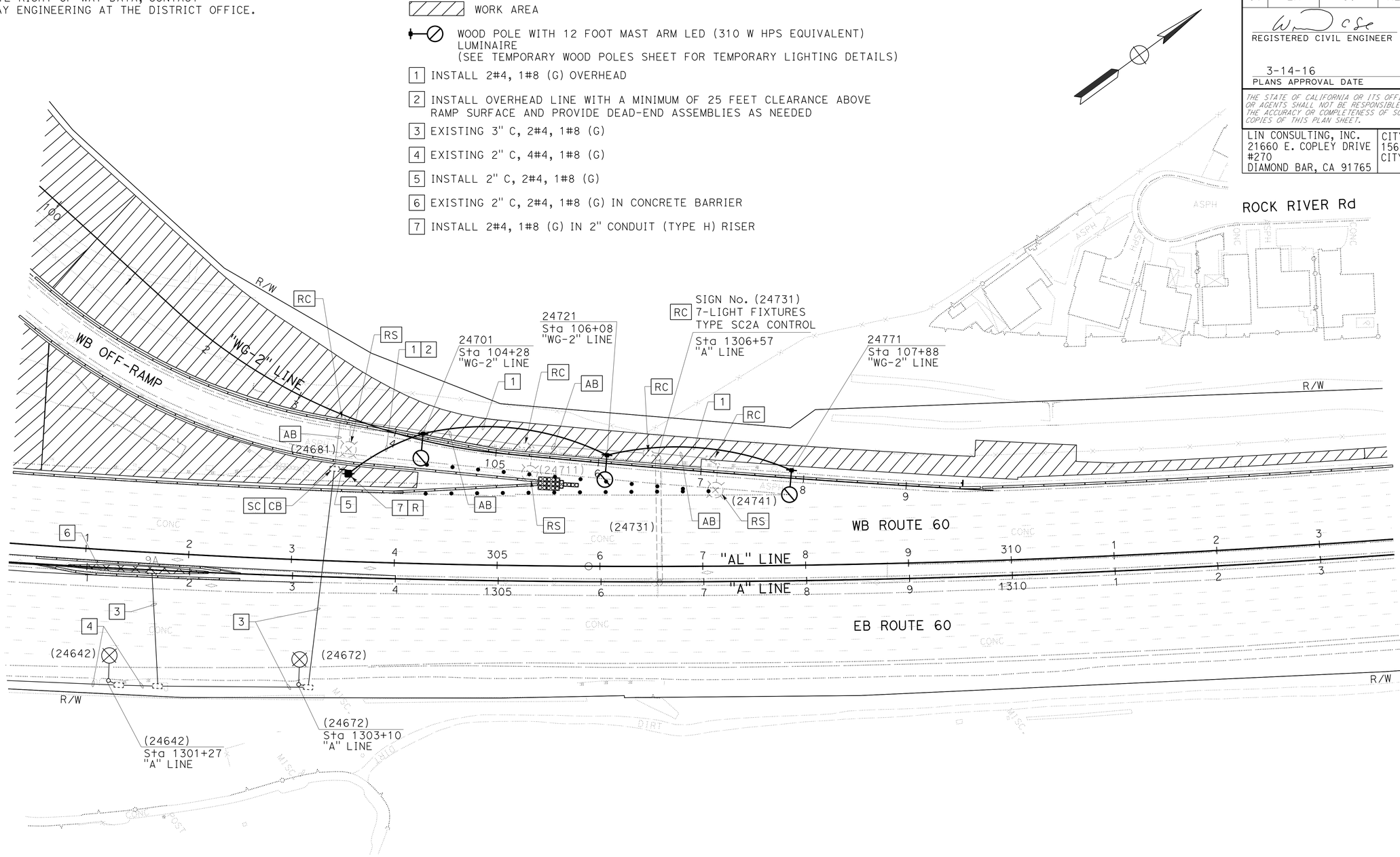

(MODIFY LIGHTING AND SIGN ILLUMINATION)
(STAGE 1A)

APPROVED FOR ELECTRICAL WORK ONLY

MODIFYING EXISTING ELECTRICAL SYSTEM

SCALE: 1" = 50'

E-1

STATE OF CALIFORNIA - DEPARTMENT OF TRANSPORTATION
Caltrans
DESIGN

CONSULTANT FUNCTIONAL SUPERVISOR: WILLIAM SUN
CALCULATED-DESIGNED BY: R. KOMMIDI
CHECKED BY: W. SUN
REVISED BY
DATE REVISED

LAST REVISION 00-00-00
DATE PLOTTED => 09-MAY-2016
TIME PLOTTED => 16:04

Dist	COUNTY	ROUTE	POST MILES TOTAL PROJECT	SHEET No.	TOTAL SHEETS
07	LA	60	R24.4/R25.3	204	384

REGISTERED CIVIL ENGINEER — DATE 1-15-16

3-14-16
PLANS APPROVAL DATE

REGISTERED PROFESSIONAL ENGINEER — WILLIAM SUN No. 57664 Exp. 12/31/17 CIVIL — STATE OF CALIFORNIA

THE STATE OF CALIFORNIA OR ITS OFFICERS OR AGENTS SHALL NOT BE RESPONSIBLE FOR THE ACCURACY OR COMPLETENESS OF SCANNED COPIES OF THIS PLAN SHEET.

LIN CONSULTING, INC.
21660 E. COPLEY DRIVE
#270
DIAMOND BAR, CA 91765

CITY OF INDUSTRY
15651 E. STAFFORD STREET
CITY OF INDUSTRY, CA 91744

NOTE: (THIS SHEET ONLY)

FOR ACCURATE RIGHT OF WAY DATA, CONTACT RIGHT OF WAY ENGINEERING AT THE DISTRICT OFFICE.

LEGEND: (THIS SHEET ONLY)

WORK AREA

WOOD POLE WITH 12 FOOT MAST ARM LED (310 W HPS EQUIVALENT) LUMINAIRE
(SEE TEMPORARY WOOD POLES SHEET FOR TEMPORARY LIGHTING DETAILS)

1 EXISTING 120/240 V TYPE 'F' MULTIPLE SERVICE PP#156522TE

2 INSTALL 2#6, 1#8 (G) OVERHEAD

3 EXISTING 2" C, 2#6, 1#8 (G)

4 INSTALL 2#6, 1#8 (G) IN 2" CONDUIT (TYPE H) RISER

5 EXISTING 2" C, RC 2#6 1#8 (G). ADD 2#6, 1#8 (G)

6 INSTALL 2" C, 2#6, 1#8 (G)

(TR) - TAMPER RESISTANT COVER FOR PULL BOX

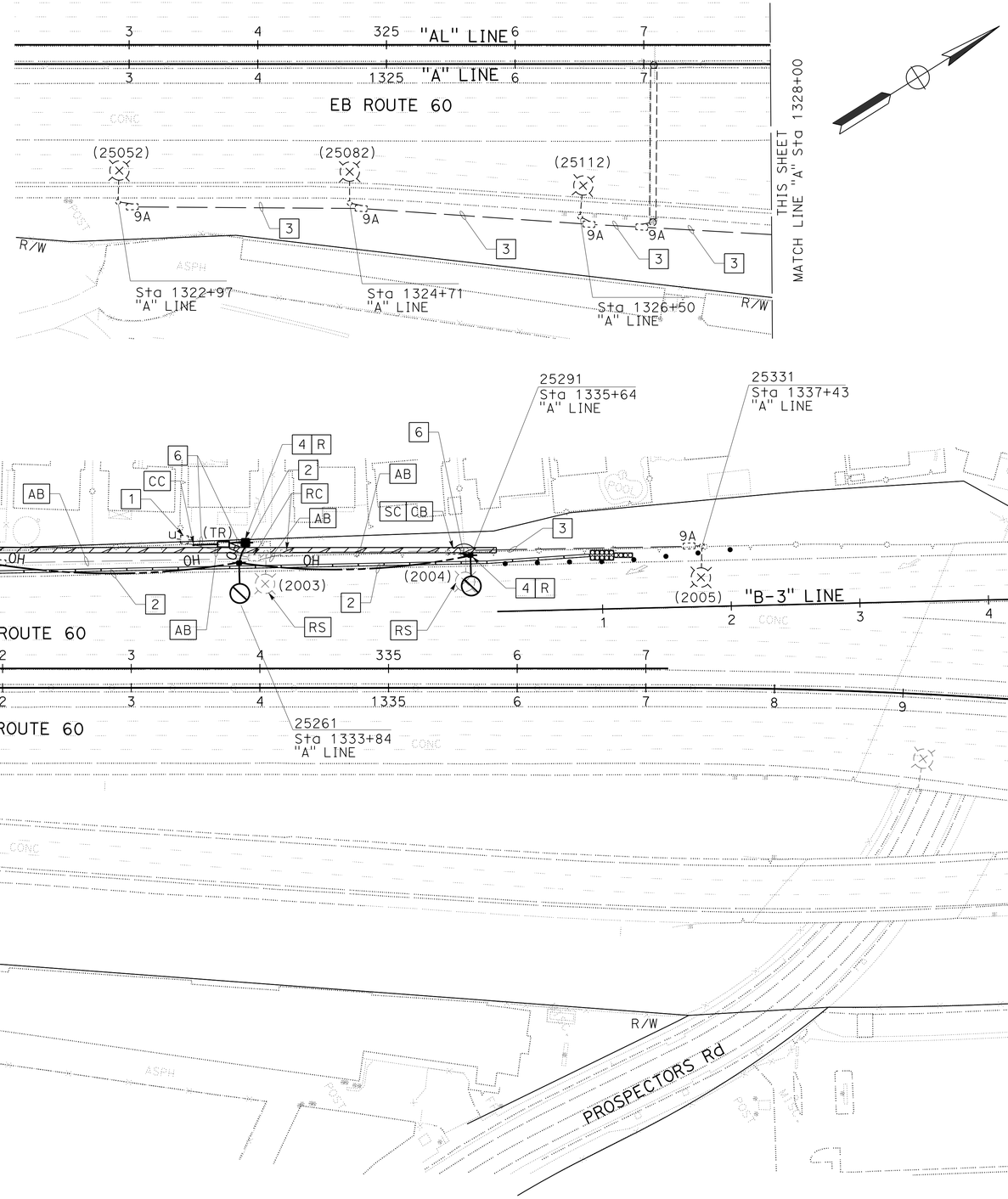

MODIFYING EXISTING ELECTRICAL SYSTEM

(MODIFY LIGHTING AND SIGN ILLUMINATION)

(STAGE 1A)

APPROVED FOR ELECTRICAL WORK ONLY

SCALE: 1" = 50'

E-2

STATE OF CALIFORNIA - DEPARTMENT OF TRANSPORTATION
Caltrans DESIGN

CONSULTANT FUNCTIONAL SUPERVISOR: WILLIAM SUN

CALCULATED-DESIGNED BY: W. SUN
CHECKED BY: R. KOMMIDI

REVISED BY | DATE REVISED

LAST REVISION 00-00-00 | DATE PLOTTED => 09-MAY-2016 | TIME PLOTTED => 16:04

Dist	COUNTY	ROUTE	POST MILES TOTAL PROJECT	SHEET No.	TOTAL SHEETS
07	LA	60	R24.4/R25.3	205	384

REGISTERED CIVIL ENGINEER 1-15-16 DATE

3-14-16
PLANS APPROVAL DATE

REGISTERED PROFESSIONAL ENGINEER WILLIAM SUN No. 57664 Exp. 12/31/17 CIVIL STATE OF CALIFORNIA

THE STATE OF CALIFORNIA OR ITS OFFICERS OR AGENTS SHALL NOT BE RESPONSIBLE FOR THE ACCURACY OR COMPLETENESS OF SCANNED COPIES OF THIS PLAN SHEET.

LIN CONSULTING, INC.
21660 E. COPLEY DRIVE
#270
DIAMOND BAR, CA 91765

CITY OF INDUSTRY
15651 E. STAFFORD STREET
CITY OF INDUSTRY, CA 91744

NOTES: (THIS SHEET ONLY)

FOR ACCURATE RIGHT OF WAY DATA, CONTACT RIGHT OF WAY ENGINEERING AT THE DISTRICT OFFICE.

LEGEND: (THIS SHEET ONLY)

WORK AREA

WOOD POLE WITH 12 FOOT MAST ARM LED (310 W HPS EQUIVALENT) LUMINAIRE
(SEE TEMPORARY WOOD POLES SHEET FOR TEMPORARY LIGHTING DETAILS)

1 EXISTING 2" C (IN CONCRETE BARRIER), 2#4, 1#8 (G)
2 INSTALL 2" C, 2#2, 1#4 (G)
3 EXISTING 2" C, 2#4, 1#8 (G)
4 EXISTING 1½" C, 2#4, 1#8 (G)
5 INSTALL 2" C, 2#4, 1#8 (G)
6 INSTALL 2#4, 1#8 (G) OVERHEAD
7 INSTALL 2#4, 1#8 (G) IN 2" CONDUIT (TYPE H) RISER
8 EXISTING 2" C (IN CONCRETE BARRIER), 2#4, 1#8 (G)
RC 2#4, 1#8 (G). ADD 2#4, 1#8 (G)
(TR) - TAMPER RESISTANT COVER FOR PULL BOX

(MODIFY LIGHTING AND SIGN ILLUMINATION)
(STAGE 2A)

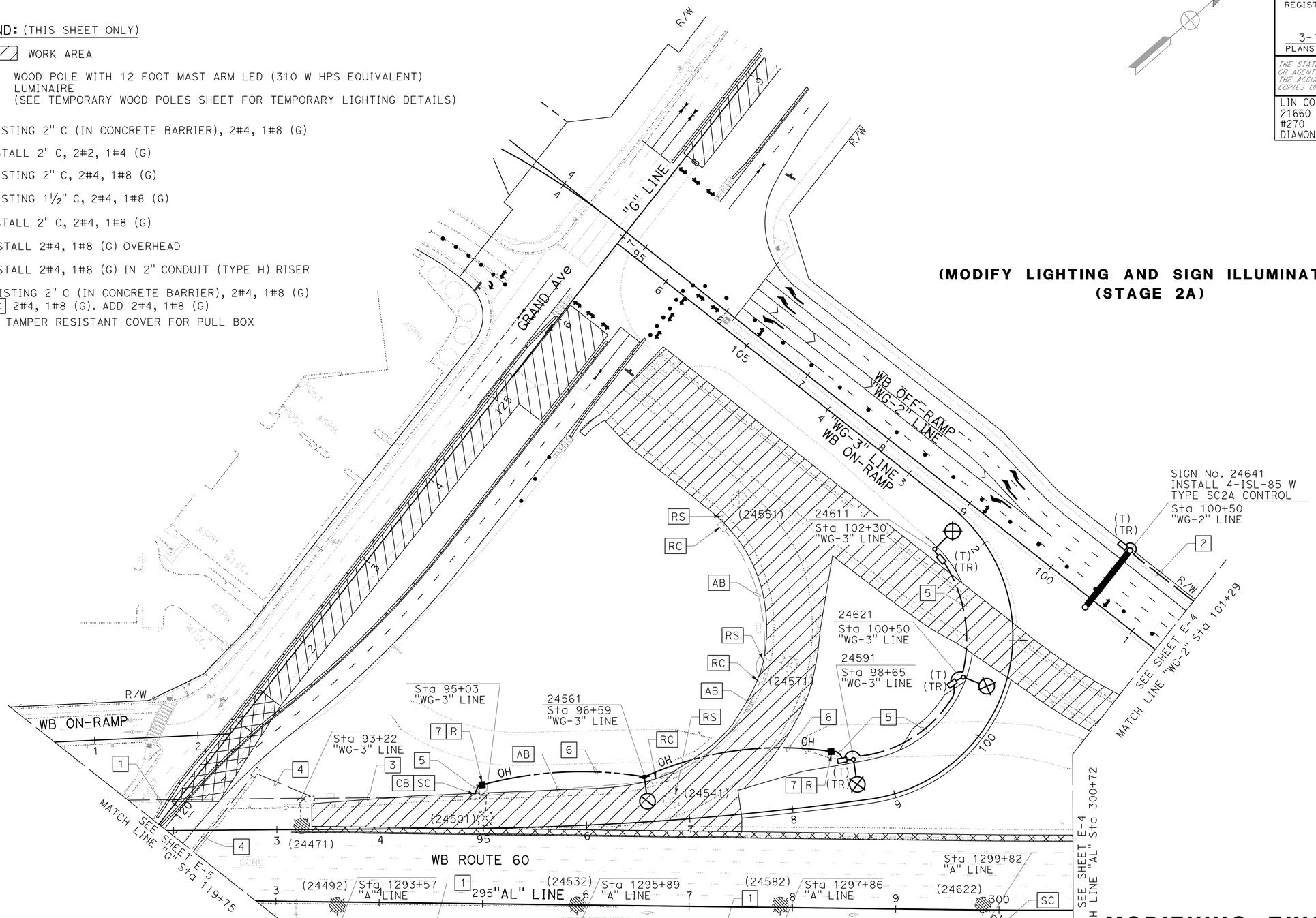

APPROVED FOR ELECTRICAL WORK ONLY

MODIFYING EXISTING ELECTRICAL SYSTEM

SCALE: 1" = 50'

E-3

STATE OF CALIFORNIA - DEPARTMENT OF TRANSPORTATION
Caltrans
DESIGN
CONSULTANT FUNCTIONAL SUPERVISOR: WILLIAM SUN
CALCULATED-DESIGNED BY: W. SUN
CHECKED BY: R. KOMMIDI
REVISED BY
DATE REVISED

LAST REVISION 00-00-00
DATE PLOTTED => 09-MAY-2016
TIME PLOTTED => 16:04

Dist	COUNTY	ROUTE	POST MILES TOTAL PROJECT	SHEET No.	TOTAL SHEETS
07	LA	60	R24.4/R25.3	206	384

REGISTERED CIVIL ENGINEER 1-15-16 DATE

3-14-16
PLANS APPROVAL DATE

REGISTERED PROFESSIONAL ENGINEER WILLIAM SUN No. 57664 Exp. 12/31/17 CIVIL STATE OF CALIFORNIA

THE STATE OF CALIFORNIA OR ITS OFFICERS OR AGENTS SHALL NOT BE RESPONSIBLE FOR THE ACCURACY OR COMPLETENESS OF SCANNED COPIES OF THIS PLAN SHEET.

LIN CONSULTING, INC.
21660 E. COPLEY DRIVE
#270
DIAMOND BAR, CA 91765

CITY OF INDUSTRY
15651 E. STAFFORD STREET
CITY OF INDUSTRY, CA 91744

NOTES: (THIS SHEET ONLY)

1. FOR ACCURATE RIGHT OF WAY DATA, CONTACT RIGHT OF WAY ENGINEERING AT THE DISTRICT OFFICE.
2. No. 9A PULL BOXES MUST BE INSTALLED WITH TYPE A9 SECURITY LID.

LEGEND: (THIS SHEET ONLY)

WORK AREA

EXISTING WOOD POLE WITH 12 FOOT MAST ARM LED (310 W HPS EQUIVALENT) LUMINAIRE

WOOD POLE WITH 12 FOOT MAST ARM LED (310 W HPS EQUIVALENT) LUMINAIRE
(SEE TEMPORARY WOOD POLES SHEET FOR TEMPORARY LIGHTING DETAILS)

NON-ILLUMINATED OH SIGN (2 POSTS)

NON-ILLUMINATED OH SIGN (1 POST)

1 INSTALL 2" C, 2#2, 1#4 (G)
2 INSTALL 2#2, 1#4 (G) OVERHEAD
3 EXISTING 3" C, 2#4, 1#8 (G). RC 2#4, 1#8 (G). ADD 2#2, 1#4 (G)
4 EXISTING 2" C, 4#4, 1#8 (G). RC 2#4, 1#8 (G). ADD 2#2, 1#4 (G)
5 EXISTING 2" C, 2#4, 1#8 (G). RC 2#4, 1#8 (G). ADD 2#2, 1#4 (G)
6 EXISTING 2" C, 2#4, 1#8 (G). RC 2#4, 1#8 (G). ADD 2#4, 1#8 (G)
7 INSTALL 2#2, 1#4 (G) IN 2" CONDUIT (TYPE H) RISER
8 INSTALL 2" C (IN NEW CONCRETE BARRIER), 2#4, 1#8 (G)
9 EXISTING 2" C (IN CONCRETE BARRIER), 2#4, 1#8 (G). RC 2#4, 1#8 (G). ADD 2#4, 1#8 (G)
10 INSTALL OVERHEAD LINE WITH A MINIMUM OF 25 FEET CLEARANCE ABOVE RAMP SURFACE AND PROVIDE DEAD-END ASSEMBLIES AS NEEDED
11 INSTALL 2" C, PT
12 INSTALL 2" C, 2#4, 1#8 (G)

(TR) - TAMPER RESISTANT COVER FOR PULL BOX

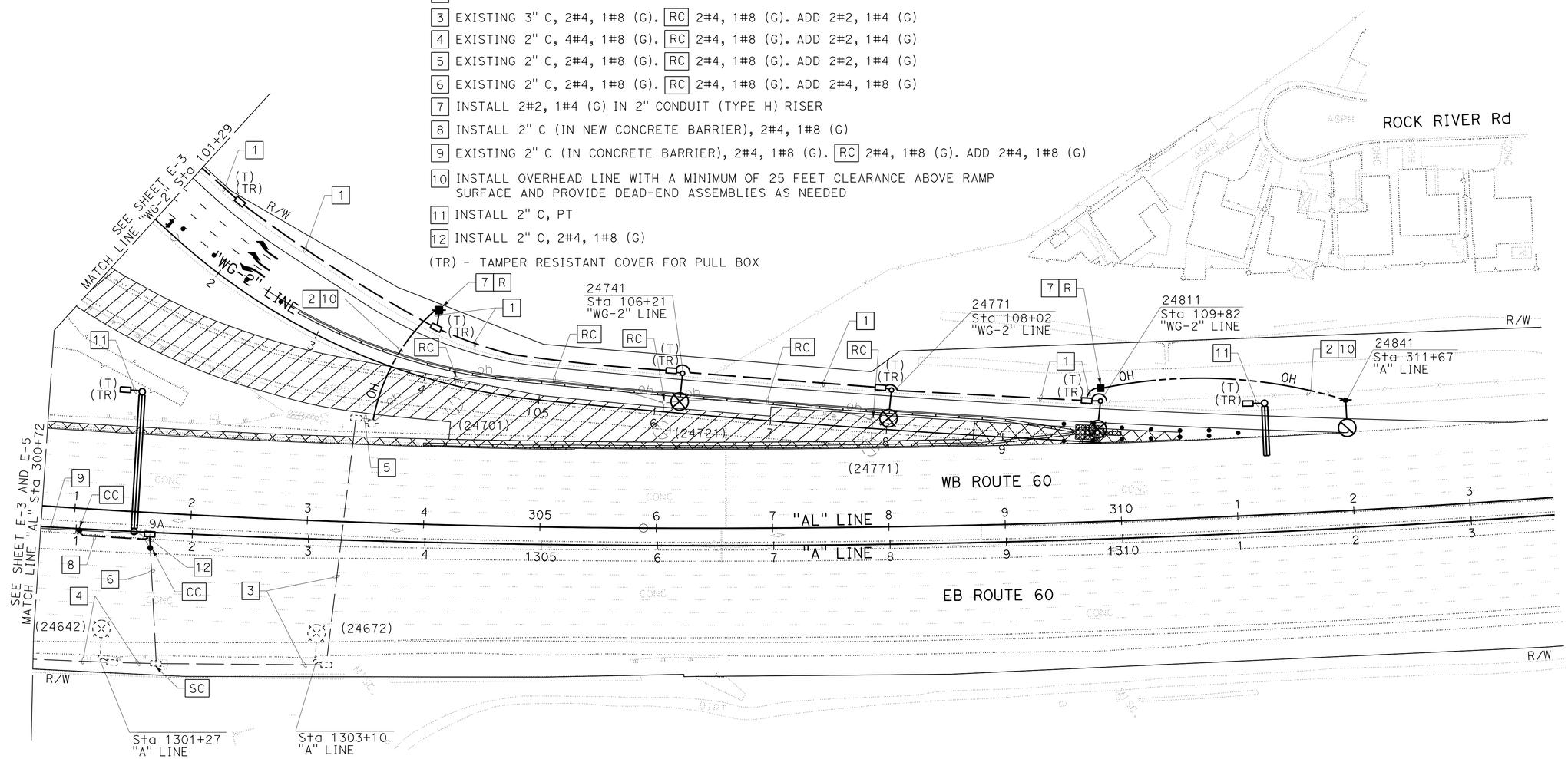

(MODIFY LIGHTING AND SIGN ILLUMINATION)
(STAGE 2A)

APPROVED FOR ELECTRICAL WORK ONLY

MODIFYING EXISTING ELECTRICAL SYSTEM

SCALE: 1" = 50'

E-4

STATE OF CALIFORNIA - DEPARTMENT OF TRANSPORTATION
Caltrans
DESIGN
CONSULTANT FUNCTIONAL SUPERVISOR: WILLIAM SUN
CALCULATED-DESIGNED BY: R. KOMMIDI
CHECKED BY: W. SUN
REVISED BY
DATE REVISED

LAST REVISION 00-00-00
DATE PLOTTED => 09-MAY-2016
TIME PLOTTED => 16:04

Dist	COUNTY	ROUTE	POST MILES TOTAL PROJECT	SHEET No.	TOTAL SHEETS
07	LA	60	R24.4/R25.3	207	384

REGISTERED CIVIL ENGINEER — DATE 1-15-16

3-14-16
PLANS APPROVAL DATE

REGISTERED PROFESSIONAL ENGINEER — WILLIAM SUN No. 57664 Exp. 12/31/17 CIVIL — STATE OF CALIFORNIA

THE STATE OF CALIFORNIA OR ITS OFFICERS OR AGENTS SHALL NOT BE RESPONSIBLE FOR THE ACCURACY OR COMPLETENESS OF SCANNED COPIES OF THIS PLAN SHEET.

LIN CONSULTING, INC.
21660 E. COPLEY DRIVE
#270
DIAMOND BAR, CA 91765

CITY OF INDUSTRY
15651 E. STAFFORD STREET
CITY OF INDUSTRY, CA 91744

NOTE: (THIS SHEET ONLY)

FOR ACCURATE RIGHT OF WAY DATA, CONTACT RIGHT OF WAY ENGINEERING AT THE DISTRICT OFFICE.

LEGEND: (THIS SHEET ONLY)

WORK AREA

1. EXISTING 120/240 V METERED TYPE III-CF SERVICE EQUIPMENT ENCLOSURE
   Ctid No. 07-53-060-R-024.451.
   ADDRESS: 561 1/2 GRAND Ave, DIAMOND BAR, CA

   2-100 A, 240 V, 2P, MAIN BREAKER
   4-30 A, 240 V, 2P, CB FOR LIGHTING AND SIGN ILLUMINATION
   4-15 A, 120 V, 1P, CB FOR TYPE V PEC
   1-30 A, 120 V, 1P, CB FOR RAMP METERING
   1-50 A, 120 V, 1P, CB FOR TRAFFIC SIGNAL
   1-20 A, 120 V, 1P, CB FOR TELEPHONE DEMARCATION CABINET
2. EXISTING 3" C, 6#4, 1#8 (G). [RC] 2#4, 1#8 (G). ADD 2#2, 1#4 (G)
3. EXISTING 1 1/2" C, 2#4, 1#8 (G)
4. EXISTING 2" C, 2#4, 1#8 (G)
5. EXISTING 2" C (IN CONCRETE BARRIER), 2#4, 1#8 (G)
6. EXISTING SOUTHERN CALIFORNIA EDISON VAULT
7. EXISTING 2" C, 4#4, 1#8 (G). [RC] 2#4, 1#8 (G). ADD 2#2, 1#4 (G)

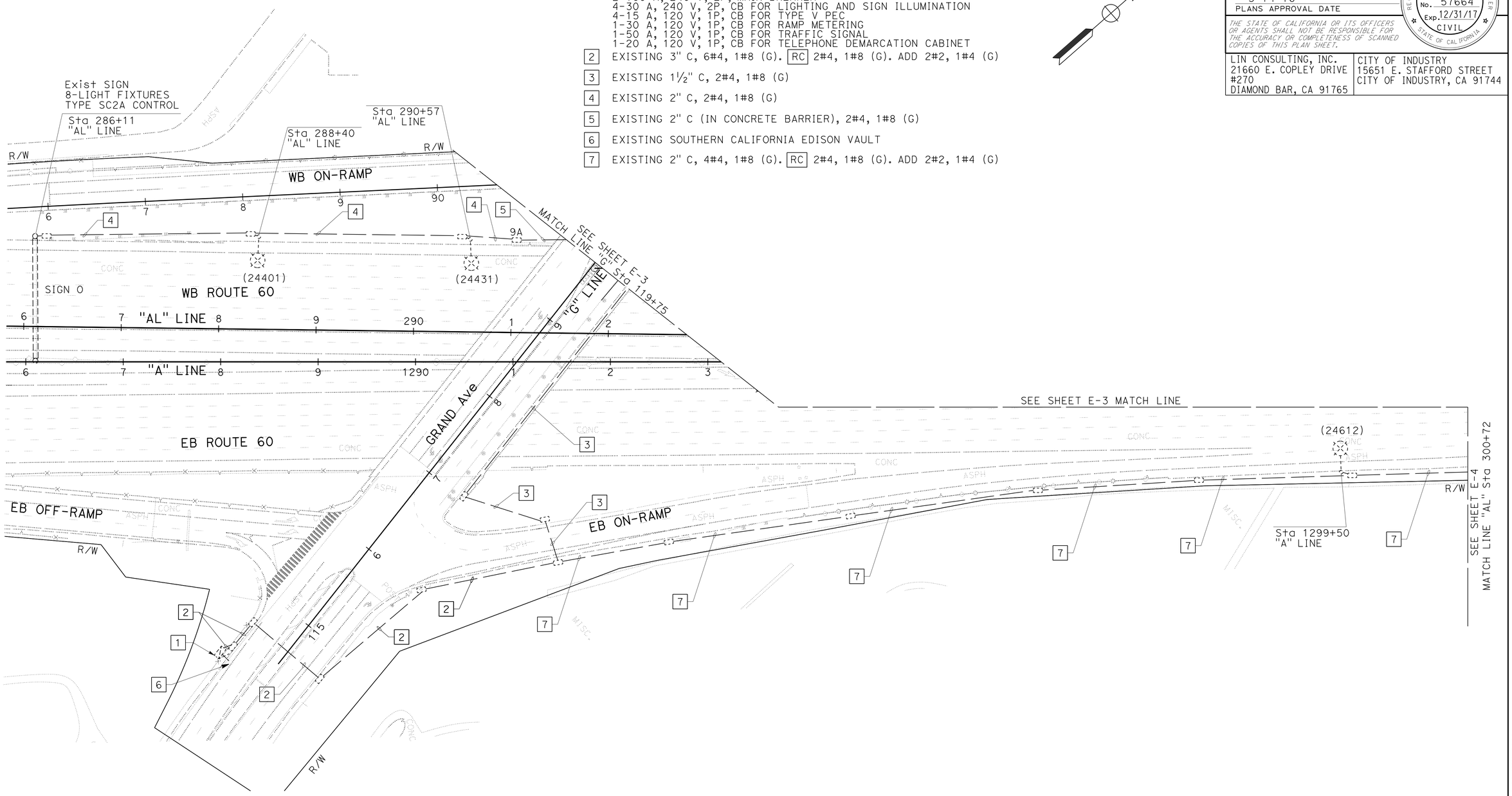

(MODIFY LIGHTING AND SIGN ILLUMINATION)
(STAGE 2A) (FINAL)

APPROVED FOR ELECTRICAL WORK ONLY

MODIFYING EXISTING ELECTRICAL SYSTEM

SCALE: 1" = 50'

E-5

STATE OF CALIFORNIA - DEPARTMENT OF TRANSPORTATION
Caltrans®
DESIGN
CONSULTANT FUNCTIONAL SUPERVISOR: WILLIAM SUN
CALCULATED-DESIGNED BY: R. KOMMIDI
CHECKED BY: W. SUN
REVISED BY
DATE REVISED

LAST REVISION 00-00-00 | DATE PLOTTED => 09-MAY-2016 | TIME PLOTTED => 16:04

Dist	COUNTY	ROUTE	POST MILES TOTAL PROJECT	SHEET No.	TOTAL SHEETS
07	LA	60	R24.4/R25.3	208	384

REGISTERED CIVIL ENGINEER — DATE 1-15-16

PLANS APPROVAL DATE 3-14-16

REGISTERED PROFESSIONAL ENGINEER — WILLIAM SUN — No. 57664 — Exp. 12/31/17 — CIVIL — STATE OF CALIFORNIA

THE STATE OF CALIFORNIA OR ITS OFFICERS OR AGENTS SHALL NOT BE RESPONSIBLE FOR THE ACCURACY OR COMPLETENESS OF SCANNED COPIES OF THIS PLAN SHEET.

LIN CONSULTING, INC.
21660 E. COPLEY DRIVE
#270
DIAMOND BAR, CA 91765

CITY OF INDUSTRY
15651 E. STAFFORD STREET
CITY OF INDUSTRY, CA 91744

NOTES: (THIS SHEET ONLY)

1. FOR ACCURATE RIGHT OF WAY DATA, CONTACT RIGHT OF WAY ENGINEERING AT THE DISTRICT OFFICE.
2. ALL NEW PULL BOXES MUST BE TRAFFIC TYPE WITH TAMPER RESISTANT COVER.

LEGEND: (THIS SHEET ONLY)

- WORK AREA
- SHORT TERM CONSTRUCTION AREA
- 1 EXISTING 2" C, 2#4, 1#8 (G)
- 2 EXISTING 2" C, 2#2, 1#4 (G)
- 3 EXISTING 2" C (IN CONCRETE BARRIER), 2#4, 1#8 (G)
- 4 INSTALL 2" C, 2#4, 1#8 (G)
- 5 EXISTING 1½" C, 2#4, 1#8 (G)
- 6 EXISTING 2" C (IN CONCRETE BARRIER), 2#4, 1#8 (G)
- (TR) - TAMPER RESISTANT COVER FOR PULL BOX

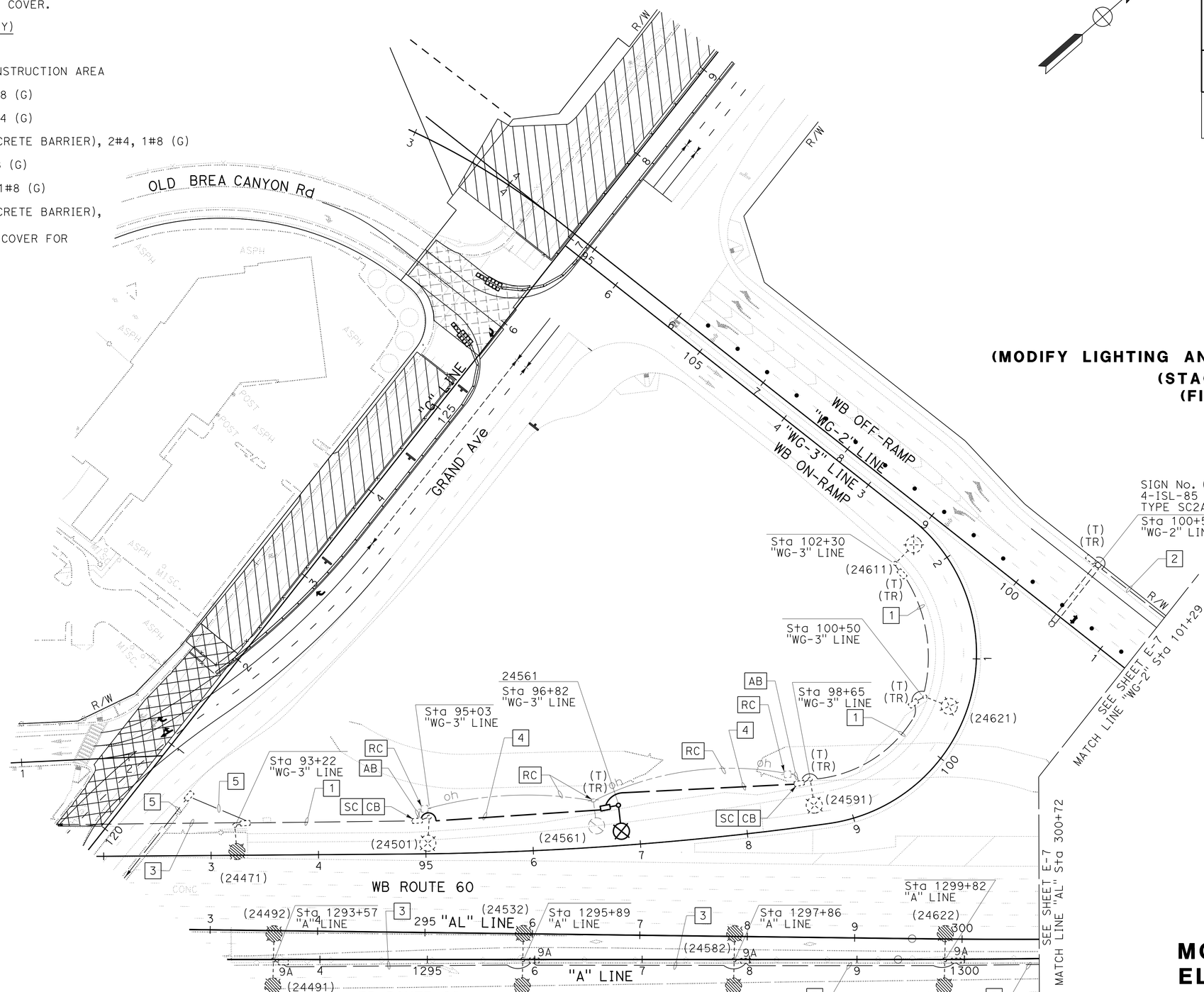

(MODIFY LIGHTING AND SIGN ILLUMINATION)
(STAGE 3A)
(FINAL)

MODIFYING EXISTING ELECTRICAL SYSTEM

SCALE: 1" = 50'

E-6

APPROVED FOR ELECTRICAL WORK ONLY

STATE OF CALIFORNIA - DEPARTMENT OF TRANSPORTATION
Caltrans
DESIGN
CONSULTANT FUNCTIONAL SUPERVISOR: WILLIAM SUN
CALCULATED-DESIGNED BY: R. KOMMIDI
CHECKED BY: W. SUN
REVISED BY
DATE REVISED

LAST REVISION 00-00-00
DATE PLOTTED => 09-MAY-2016
TIME PLOTTED => 16:04

Dist	COUNTY	ROUTE	POST MILES TOTAL PROJECT	SHEET No.	TOTAL SHEETS
07	LA	60	R24.4/R25.3	209	384

REGISTERED CIVIL ENGINEER — DATE 1-15-16

3-14-16
PLANS APPROVAL DATE

REGISTERED PROFESSIONAL ENGINEER — WILLIAM SUN No. 57664 Exp. 12/31/17 CIVIL — STATE OF CALIFORNIA

THE STATE OF CALIFORNIA OR ITS OFFICERS OR AGENTS SHALL NOT BE RESPONSIBLE FOR THE ACCURACY OR COMPLETENESS OF SCANNED COPIES OF THIS PLAN SHEET.

LIN CONSULTING, INC.
21660 E. COPLEY DRIVE
#270
DIAMOND BAR, CA 91765

CITY OF INDUSTRY
15651 E. STAFFORD STREET
CITY OF INDUSTRY, CA 91744

NOTES: (THIS SHEET ONLY)

1. FOR ACCURATE RIGHT OF WAY DATA, CONTACT RIGHT OF WAY ENGINEERING AT THE DISTRICT OFFICE.
2. ALL NEW PULL BOXES MUST BE TRAFFIC TYPE.

LEGEND: (THIS SHEET ONLY)

EXISTING NON-ILLUMINATED OH SIGN (2 POSTS)

EXISTING NON-ILLUMINATED OH SIGN (1 POST)

1 EXISTING 2" C, 2#2, 1#4 (G)

2 EXISTING 3" C, 2#4, 1#8 (G)

3 EXISTING 3" C, 2#2, 1#4 (G)

4 EXISTING 2" C, 2#4, 2#2, 1#4 (G)

5 INSTALL 3" C, 2#2, 1#4 (G)

6 EXISTING 2" C, 2#4, 1#8 (G) IN CONCRETE BARRIER

7 INSTALL 2" C, 2#2, 1#4 (G)

8 INSTALL 3" C, 2#2, 1#4 (G)

9 EXISTING 3" C, 2#2, 1#4 (G). RC 2#2, 1#4 (G). ADD 2#2, 1#4 (G)

(TR) - TAMPER RESISTANT COVER FOR PULL BOX

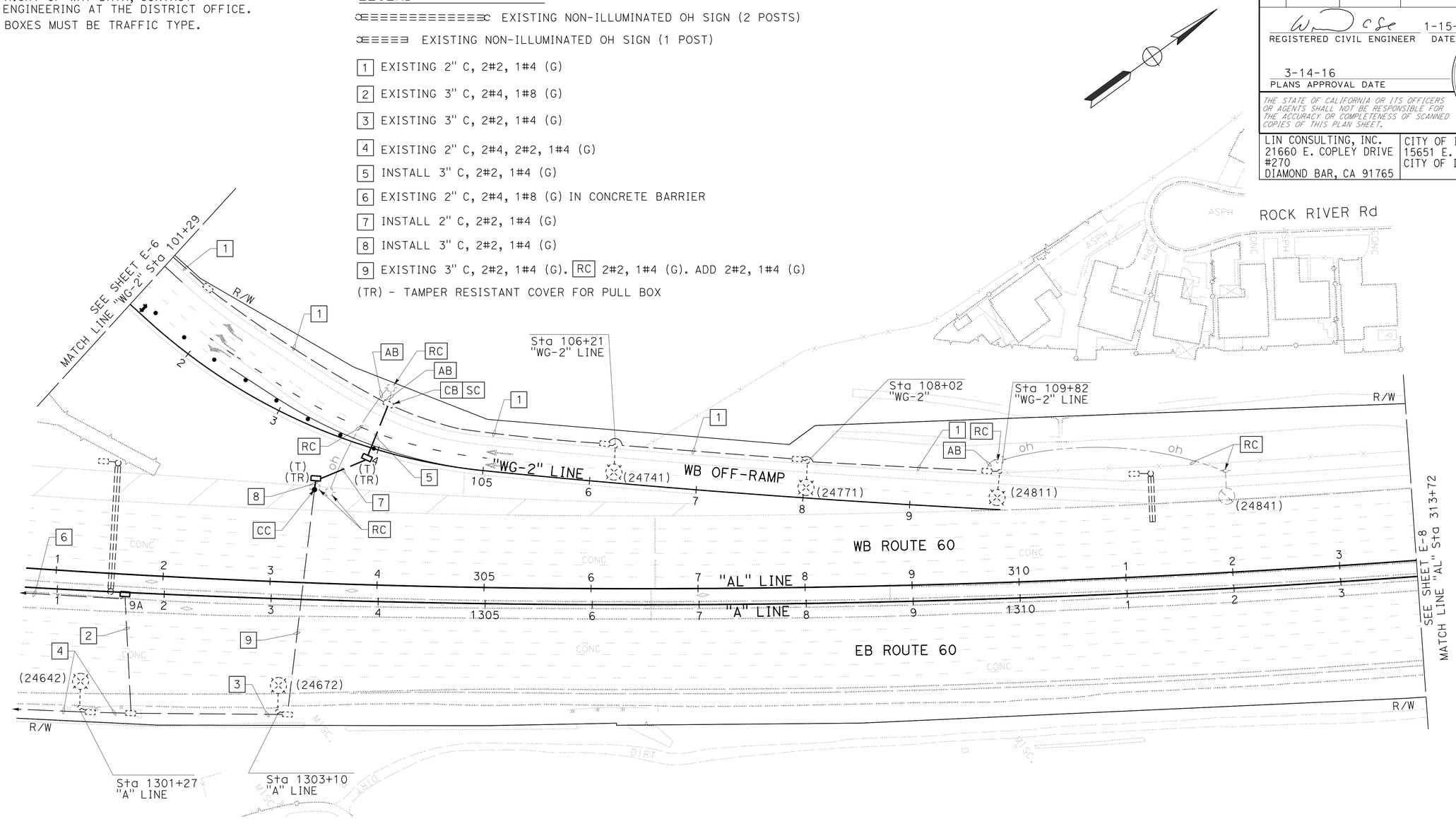

(MODIFY LIGHTING AND SIGN ILLUMINATION)
(STAGE 3A)
(FINAL)

APPROVED FOR ELECTRICAL WORK ONLY

MODIFYING EXISTING ELECTRICAL SYSTEM

SCALE: 1" = 50'

E-7

STATE OF CALIFORNIA - DEPARTMENT OF TRANSPORTATION
Caltrans
DESIGN
CONSULTANT FUNCTIONAL SUPERVISOR: WILLIAM SUN
CALCULATED-DESIGNED BY: R. KOMMIDI
CHECKED BY: W. SUN
REVISED BY
DATE REVISED

LAST REVISION 00-00-00
DATE PLOTTED => 09-MAY-2016
TIME PLOTTED => 16:04

Dist	COUNTY	ROUTE	POST MILES TOTAL PROJECT	SHEET No.	TOTAL SHEETS
07	LA	60	R24.4/R25.3	210	384

REGISTERED CIVIL ENGINEER 1-15-16 DATE

3-14-16
PLANS APPROVAL DATE

REGISTERED PROFESSIONAL ENGINEER
WILLIAM SUN
No. 57664
Exp. 12/31/17
CIVIL
STATE OF CALIFORNIA

THE STATE OF CALIFORNIA OR ITS OFFICERS OR AGENTS SHALL NOT BE RESPONSIBLE FOR THE ACCURACY OR COMPLETENESS OF SCANNED COPIES OF THIS PLAN SHEET.

LIN CONSULTING, INC.
21660 E. COPLEY DRIVE
#270
DIAMOND BAR, CA 91765

CITY OF INDUSTRY
15651 E. STAFFORD STREET
CITY OF INDUSTRY, CA 91744

NOTE: (THIS SHEET ONLY)

FOR ACCURATE RIGHT OF WAY DATA, CONTACT
RIGHT OF WAY ENGINEERING AT THE DISTRICT OFFICE.

LEGEND: (THIS SHEET ONLY)

NON-ILLUMINATED OH SIGN (1 POST)

1 EXISTING 2" C, 2#6, 1#8 (G)

2 INSTALL 2" C, PT

(TR) - TAMPER RESISTANT COVER FOR PULL BOX

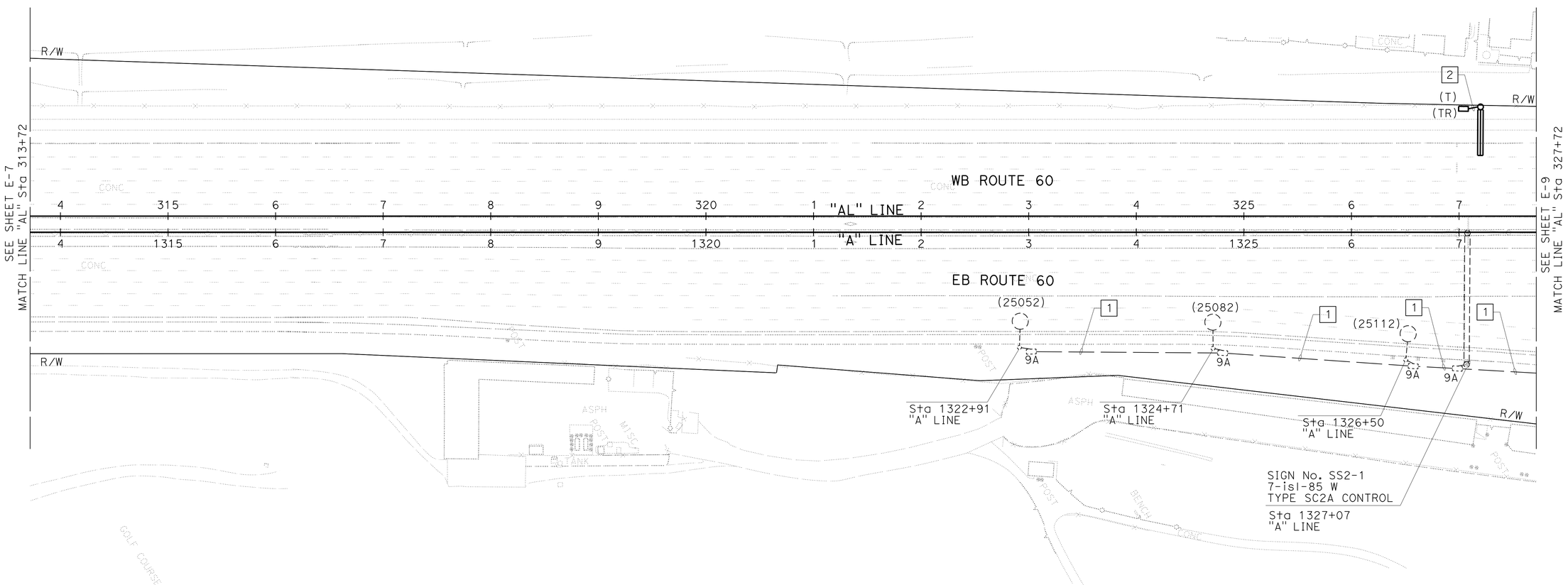

(MODIFY LIGHTING AND SIGN ILLUMINATION)
(STAGE 3A)
(FINAL)

APPROVED FOR ELECTRICAL WORK ONLY

MODIFYING EXISTING ELECTRICAL SYSTEM

SCALE: 1" = 50'

E-8

STATE OF CALIFORNIA - DEPARTMENT OF TRANSPORTATION
Caltrans
DESIGN

CONSULTANT FUNCTIONAL SUPERVISOR: WILLIAM SUN
CALCULATED-DESIGNED BY: R. KOMMIDI
CHECKED BY: W. SUN
REVISED BY
DATE REVISED

LAST REVISION 00-00-00
DATE PLOTTED => 09-MAY-2016
TIME PLOTTED => 16:04

Dist	COUNTY	ROUTE	POST MILES TOTAL PROJECT	SHEET No.	TOTAL SHEETS
07	LA	60	R24.4/R25.3	211	384

REGISTERED CIVIL ENGINEER — DATE 1-15-16

PLANS APPROVAL DATE 3-14-16

REGISTERED PROFESSIONAL ENGINEER — WILLIAM SUN No. 57664 Exp. 12/31/17 CIVIL — STATE OF CALIFORNIA

THE STATE OF CALIFORNIA OR ITS OFFICERS OR AGENTS SHALL NOT BE RESPONSIBLE FOR THE ACCURACY OR COMPLETENESS OF SCANNED COPIES OF THIS PLAN SHEET.

LIN CONSULTING, INC.
21660 E. COPLEY DRIVE
#270
DIAMOND BAR, CA 91765

CITY OF INDUSTRY
15651 E. STAFFORD STREET
CITY OF INDUSTRY, CA 91744

NOTE: (THIS SHEET ONLY)

FOR ACCURATE RIGHT OF WAY DATA, CONTACT RIGHT OF WAY ENGINEERING AT THE DISTRICT OFFICE.

LEGEND: (THIS SHEET ONLY)

- NON-ILLUMINATED OH SIGN (1 POST)
- [1] EXISTING 120/240 V TYPE 'F' MULTIPLE SERVICE PP#156522TE
- [2] INSTALL 2" C, PT
- [3] EXISTING 3" C, 2#6, 1#8 (G)
- [4] INSTALL 2" C, 2#6, 1#8 (G)
- [5] EXISTING 2" C, 2#6, 1#8 (G)
- [6] EXISTING 1½" C, 2#6, 1#8 (G) (IN CONCRETE BARRIER) [RC] 2#6, 1#8 (G) ADD 2#6, 1#8 (G)
- [7] EXISTING 3" C, 2#6, 1#8 (G)
- (TR) - TAMPER RESISTANT COVER FOR PULL BOX

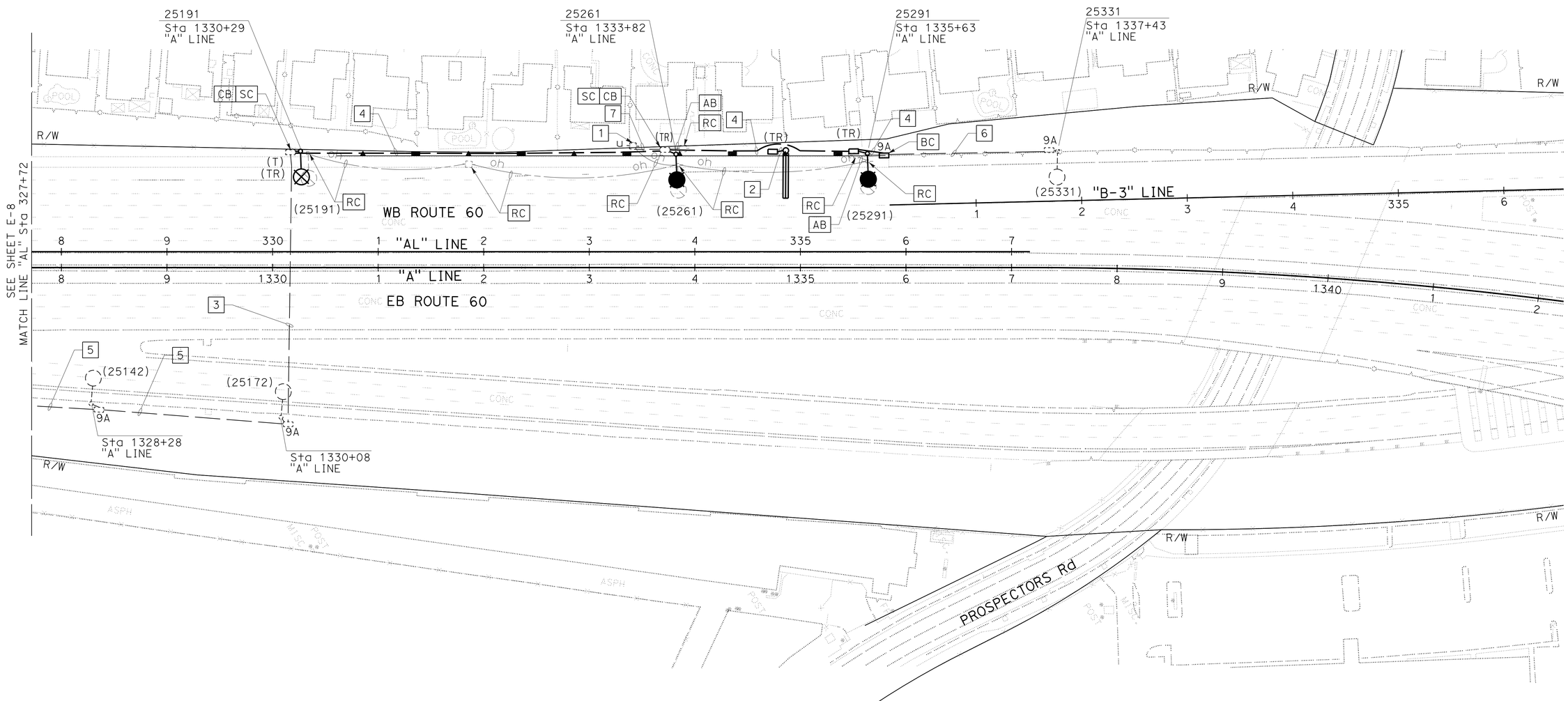

(MODIFY LIGHTING AND SIGN ILLUMINATION)
(STAGE 3A)
(FINAL)
APPROVED FOR ELECTRICAL WORK ONLY

MODIFYING EXISTING ELECTRICAL SYSTEM

SCALE: 1" = 50'

E-9

STATE OF CALIFORNIA - DEPARTMENT OF TRANSPORTATION
Caltrans
DESIGN
CONSULTANT FUNCTIONAL SUPERVISOR: WILLIAM SUN
CALCULATED-DESIGNED BY: W. SUN
CHECKED BY: R. KOMMIDI
REVISED BY
DATE REVISED

LAST REVISION 00-00-00
DATE PLOTTED => 09-MAY-2016
TIME PLOTTED => 16:04

Dist	COUNTY	ROUTE	POST MILES TOTAL PROJECT	SHEET No.	TOTAL SHEETS
07	LA	60	R24.4/R25.3	212	384

REGISTERED CIVIL ENGINEER 1-15-16 DATE

3-14-16
PLANS APPROVAL DATE

REGISTERED PROFESSIONAL ENGINEER WILLIAM SUN No. 57664 Exp. 12/31/17 CIVIL STATE OF CALIFORNIA

THE STATE OF CALIFORNIA OR ITS OFFICERS OR AGENTS SHALL NOT BE RESPONSIBLE FOR THE ACCURACY OR COMPLETENESS OF SCANNED COPIES OF THIS PLAN SHEET.

LIN CONSULTING, INC.
21660 E. COPLEY DRIVE
#270
DIAMOND BAR, CA 91765

CITY OF INDUSTRY
15651 E. STAFFORD STREET
CITY OF INDUSTRY, CA 91744

NOTES: (THIS SHEET ONLY)

1. ALL OVERHEAD CABLE MUST BE SLACK SPANNED WITH 25 FEET MINIMUM OVERHEAD CLEARANCE.
2. NO SPARE CONDUCTORS REQUIRED EXCEPT AS NOTED.
3. MULTI-CONDUCTOR OR SINGLE CONDUCTOR CABLE MAY BE USED.
4. OVERHEAD LINE CONSTRUCTION NOT SPECIFICALLY COVERED HEREON MUST CONFORM WITH THE PROVISIONS OF GENERAL ORDER No. 95 OF PUBLIC UTILITIES COMMISSION.

LEGEND: (THIS SHEET ONLY)

1 CABLE MUST BE SUSPENDED FROM SPAN-WIRE AS FOLLOWS:
A) MAIN RUN - 3/8" MESSENGER WIRE
B) SECONDARY RUN - 1/4" MESSENGER WIRE

2 MAST ARM FOR LUMINAIRES MUST CONFORM TO SECTION 86-2.12 OF THE STANDARD SPECIFICATIONS. PIPE TIE RODS MUST BE 3/4" FOR MAST ARMS WITH 3/8" ROUND BOLT ON EACH END

3 LUMINAIRE MUST HAVE DRIVER

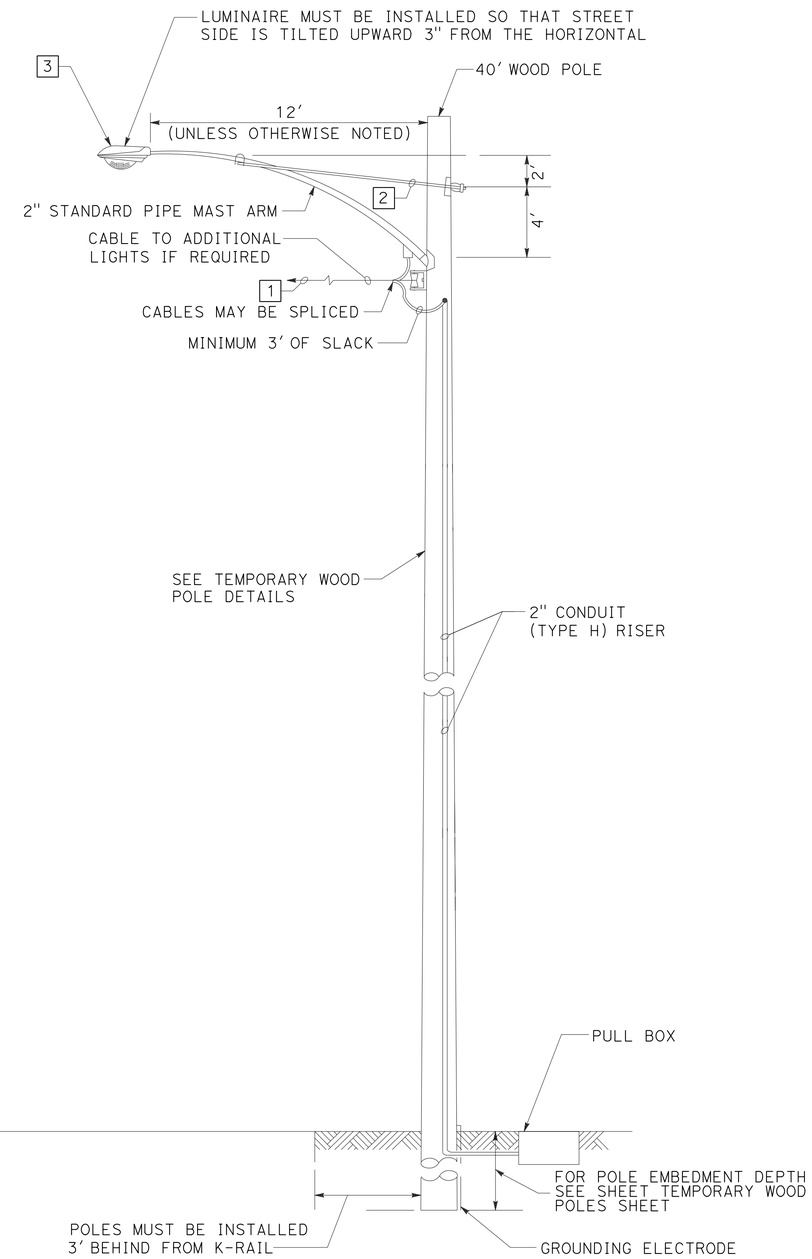

TYPICAL MOUNTING DETAILS
WOOD POLES

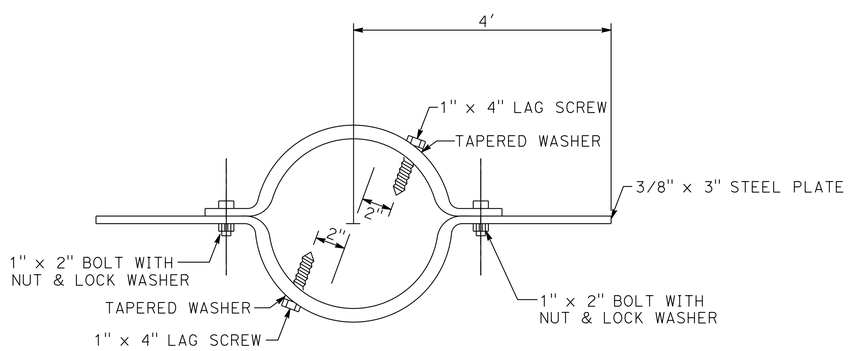

WIND ANCHOR

TO BE INSTALLED PERPENDICULAR TO MAST ARMS AND 2' MINIMUM BELOW GRADE

(MODIFY LIGHTING AND SIGN ILLUMINATION)
(ELECTRICAL DETAILS)

MODIFYING EXISTING ELECTRICAL SYSTEM

E-10

REVISED BY	DATE REVISED
R. KOMMIDI	W. SUN

CALCULATED-DESIGNED BY: R. KOMMIDI
CHECKED BY: W. SUN
CONSULTANT FUNCTIONAL SUPERVISOR: WILLIAM SUN

STATE OF CALIFORNIA - DEPARTMENT OF TRANSPORTATION
Caltrans
DESIGN

LAST REVISION 00-00-00
DATE PLOTTED => 10-MAY-2016
TIME PLOTTED => 09:41

Dist	COUNTY	ROUTE	POST MILES TOTAL PROJECT	SHEET No.	TOTAL SHEETS
07	LA	60	R24.4/R25.3	213	384

REGISTERED CIVIL ENGINEER 1-15-16 DATE

3-14-16
PLANS APPROVAL DATE

REGISTERED PROFESSIONAL ENGINEER WILLIAM SUN No. 57664 Exp. 12/31/17 CIVIL STATE OF CALIFORNIA

THE STATE OF CALIFORNIA OR ITS OFFICERS OR AGENTS SHALL NOT BE RESPONSIBLE FOR THE ACCURACY OR COMPLETENESS OF SCANNED COPIES OF THIS PLAN SHEET.

LIN CONSULTING, INC.
21660 E. COPLEY DRIVE
#270
DIAMOND BAR, CA 91765

CITY OF INDUSTRY
15651 E. STAFFORD STREET
CITY OF INDUSTRY, CA 91744

LEGEND: (THIS SHEET ONLY)

- NEW CONDUCTOR
- EXISTING CONDUCTOR
- EXISTING CONDUCTOR TO BE REMOVED
- SPLICE POINT
- EXISTING LUMINAIRE
- EXISTING LUMINAIRE TO BE REMOVED
- NEW LED LUMINAIRE
- EXISTING SIGN ILLUMINATION
- EXISTING SIGN ILLUMINATION TO BE REMOVED
- NEW SIGN ILLUMINATION

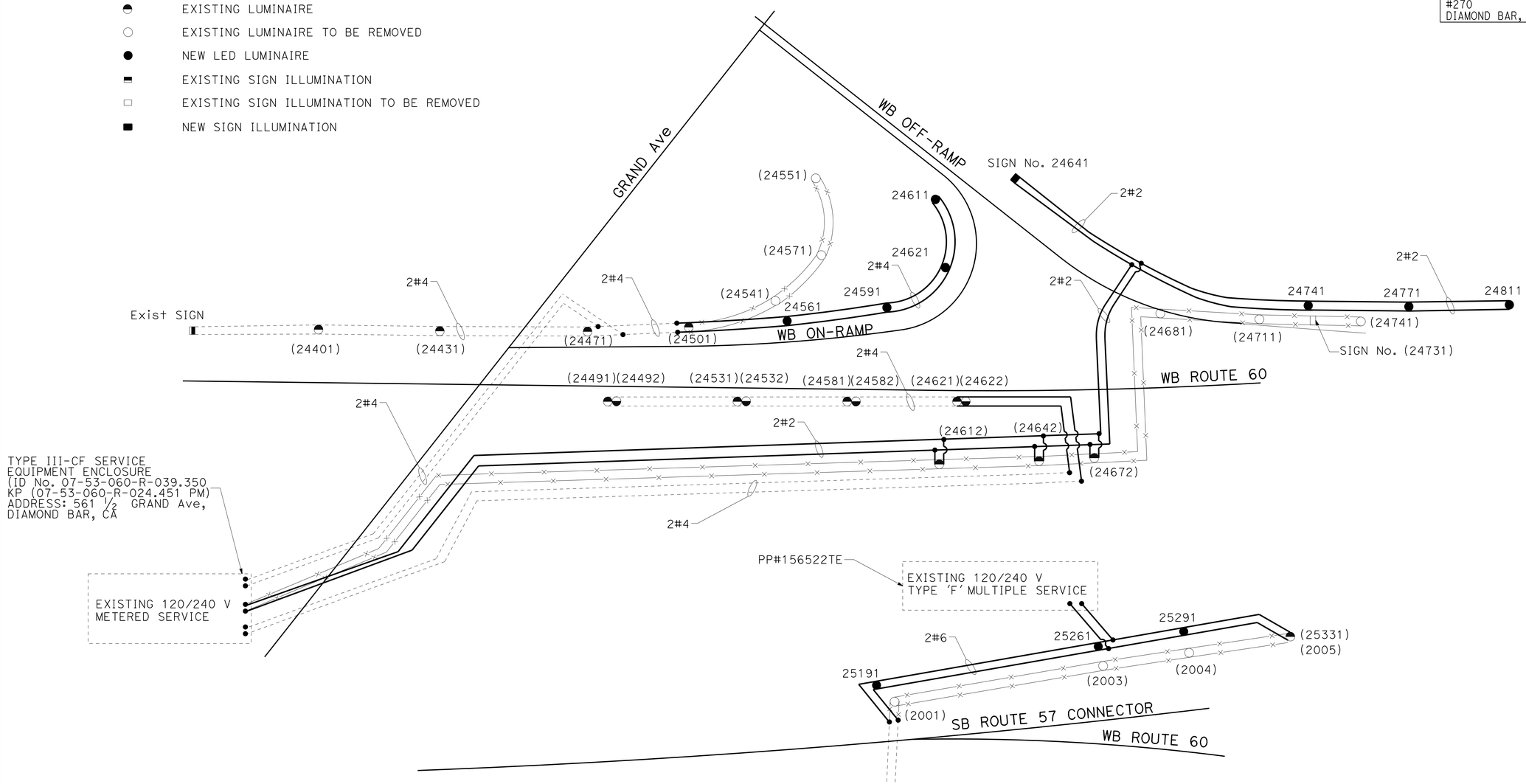

(MODIFY LIGHTING AND SIGN ILLUMINATION)
(WIRING DIAGRAM)

MODIFYING EXISTING ELECTRICAL SYSTEM

E-11

R. KOMMIDI — REVISED BY
W. SUN — DATE REVISED
CALCULATED-DESIGNED BY
CHECKED BY
CONSULTANT FUNCTIONAL SUPERVISOR
WILLIAM SUN
STATE OF CALIFORNIA - DEPARTMENT OF TRANSPORTATION
Caltrans
DESIGN

LAST REVISION 00-00-00
DATE PLOTTED => 09-MAY-2016
TIME PLOTTED => 16:04

Dist	COUNTY	ROUTE	POST MILES TOTAL PROJECT	SHEET No.	TOTAL SHEETS
07	LA	60	R24.4/R25.3	214	384

REGISTERED CIVIL ENGINEER 1-15-16 DATE

3-14-16
PLANS APPROVAL DATE

REGISTERED PROFESSIONAL ENGINEER WILLIAM SUN No. 57664 Exp. 12/31/17 CIVIL STATE OF CALIFORNIA

THE STATE OF CALIFORNIA OR ITS OFFICERS OR AGENTS SHALL NOT BE RESPONSIBLE FOR THE ACCURACY OR COMPLETENESS OF SCANNED COPIES OF THIS PLAN SHEET.

LIN CONSULTING, INC.
21660 E. COPLEY DRIVE
#270
DIAMOND BAR, CA 91765

CITY OF INDUSTRY
15651 E. STAFFORD STREET
CITY OF INDUSTRY, CA 91744

NOTES: (THIS SHEET ONLY)

1. FOR ACCURATE RIGHT OF WAY DATA, CONTACT RIGHT OF WAY ENGINEERING AT THE DISTRICT OFFICE.
2. ALL NEW LIGHT POLES AND FOUNDATIONS TO BE INSTALLED BY THE CITY OF INDUSTRY.
3. ALL WIRING TO BE INSTALLED BY THE CITY OF INDUSTRY.
4. ALL EXISTING LIGHT POLES TO BE REMOVED AND SALVAGED BY SOUTHERN CALIFORNIA EDISON.

LEGEND: (THIS SHEET ONLY)

9	C 27 ●	NEW 27,500 LUMEN (250 WATT) HPS LAMPS WITH 12' LUMINAIRE MAST ARM TO BE INSTALLED BY OTHERS
4	C 27 ⊗	Exist 27,500 LUMEN (250 WATT) HPS LAMPS ON CONCRETE POLE TO BE REMOVED BY SOUTHERN CALIFORNIA EDISON
	C 27 ○	Exist 27,500 LUMEN (250 WATT) HPS LAMPS ON CONCRETE POLE
1	INSTALL 2" C, PT	
2	INSTALL 1" C STUB OUT	

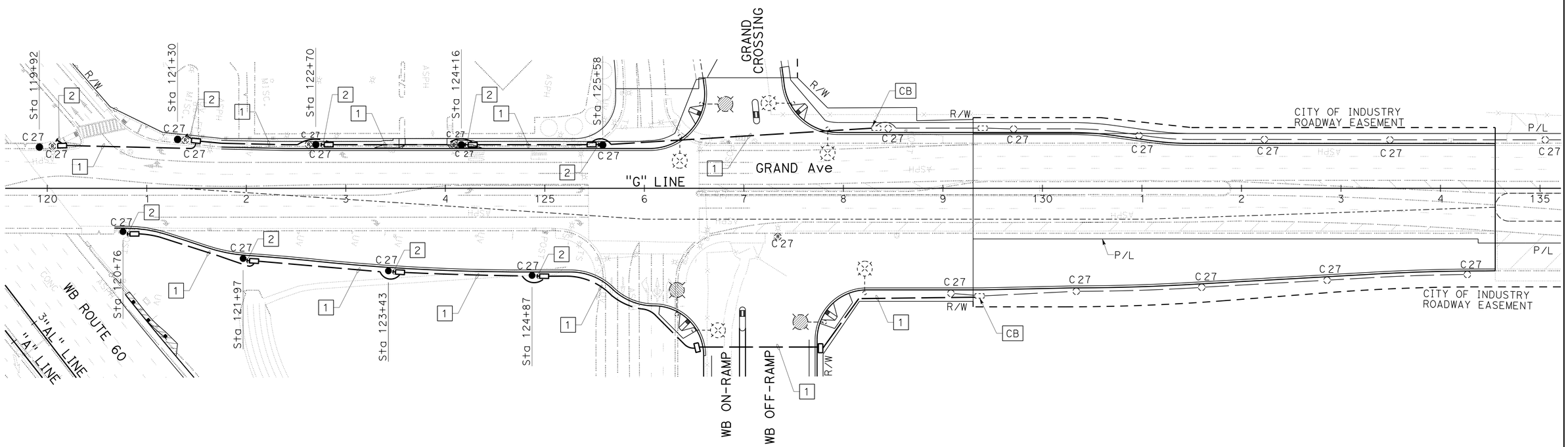

LIGHTING (CITY STREET)

SCALE: 1" = 50'

E-12

APPROVED FOR ELECTRICAL WORK ONLY

STATE OF CALIFORNIA - DEPARTMENT OF TRANSPORTATION
Caltrans®
DESIGN
CONSULTANT FUNCTIONAL SUPERVISOR: WILLIAM SUN
CALCULATED-DESIGNED BY: R. WOO
CHECKED BY: W. SUN
REVISED BY
DATE REVISED

LAST REVISION 00-00-00
DATE PLOTTED => 09-MAY-2016
TIME PLOTTED => 16:04

Dist	COUNTY	ROUTE	POST MILES TOTAL PROJECT	SHEET No.	TOTAL SHEETS
07	LA	60	R24.4/R25.3	215	384

REGISTERED CIVIL ENGINEER — DATE 1-15-16

3-14-16
PLANS APPROVAL DATE

REGISTERED PROFESSIONAL ENGINEER — WILLIAM SUN No. 57664 Exp. 12/31/17 CIVIL — STATE OF CALIFORNIA

THE STATE OF CALIFORNIA OR ITS OFFICERS OR AGENTS SHALL NOT BE RESPONSIBLE FOR THE ACCURACY OR COMPLETENESS OF SCANNED COPIES OF THIS PLAN SHEET.

LIN CONSULTING, INC.
21660 E. COPLEY DRIVE
#270
DIAMOND BAR, CA 91765

CITY OF INDUSTRY
15651 E. STAFFORD STREET
CITY OF INDUSTRY, CA 91744

NOTE: (THIS SHEET ONLY)

FOR ACCURATE RIGHT OF WAY DATA, CONTACT RIGHT OF WAY ENGINEERING AT THE DISTRICT OFFICE.

LEGEND: (THIS SHEET ONLY)

WORK AREA

1. EXISTING 1½V TYPE III-CF SERVICE EQUIPMENT ENCLOSURE
   Ctid: 0753060R024450
   ADDRESS: 526 ½ GRAND Ave, DIAMOND BAR, CA
   METER 1:
   - 100 A, 240 V, 2P (MAIN BREAKER)
   - 50 A, 120 V, 1P (SIGNAL)
   - 20 A, 120 V, 1P (PEC)
   - 40 A, 240 V, 2P (HWY SIGNS)
   - 20 A, 120 V, 1P (IISNS)

   Ctid: 0753060R024445M
   ADDRESS: 525 GRAND Ave, DIAMOND BAR, CA
   METER 2:
   - 100 A, 240 V, 2P (MAIN BREAKER)
   - 40 A, 240 V, 2P (LIGHTING)
   - 20 A, 120 V, 1P (SAFETY LIGHTING)
   - 40 A, 120 V, 1P (RAMP METERING)
2. INSTALL 2#6, 1#8 (G) IN 2" CONDUIT (TYPE H) RISER
3. INSTALL OVERHEAD LINE WITH A MINIMUM OF 25 FEET CLEARANCE ABOVE ROADWAY SURFACE AND PROVIDE DEAD-END ASSEMBLIES AS NEEDED

EXISTING CONDUIT AND CONDUCTOR SCHEDULE (THIS SHEET ONLY)

TYPE CABLE	CONDUCTOR RUN	1	2	3	4	5	6	7	8	9	10	11	12	13	14
#14	RAMP SIGNAL	–	–	–	–	–	3	6	6	–	–	–	–	–	–
#14	METER ON	–	–	–	–	–	–	–	4	4	4	4	2	–	–
#6	SERVICE	–	–	–	–	–	–	–	2	2	2	2	–	2(N)	2(N)
#8	EGC	–	–	1(N)	1(N)	1(N)	1(N)	1(N)	2(N)	1(N)	1(N)	1(N)	1(N)	1(N)	1(N)
DLC	DEMAND	–	–	–	–	–	–	2	2	–	–	–	–	–	–
	PASSAGE	–	–	–	–	–	–	2	2	–	–	–	–	–	–
	MAINLINE	–	–	–	7	7	–	7	7	–	–	–	–	–	–
	QUEUE	–	–	–	–	–	–	–	1	1	1	–	–	–	–
	COUNT	2	2	1	–	1	–	1	3	2	–	–	–	–	–
	TOTAL	2	2	1	7	8	–	12	15	3	1	–	–	–	–
CONDUIT SIZE		1½"	2"	1½"	2"	3"	3"	3"	2-3"	2"	2"	1½"'	1½"	(N) 2"	(N) OH

(N) = NEW

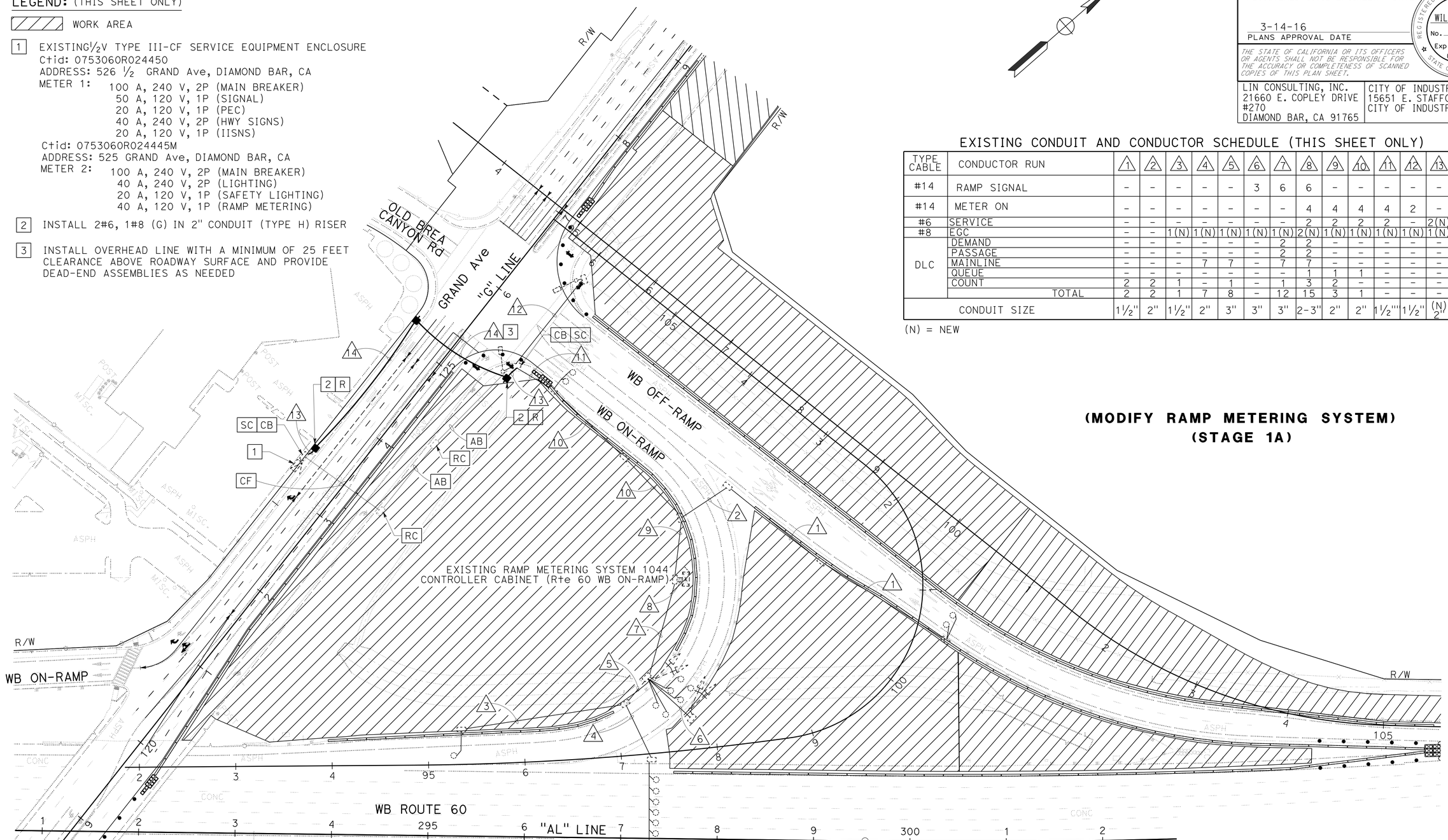

(MODIFY RAMP METERING SYSTEM)
(STAGE 1A)

MODIFYING EXISTING ELECTRICAL SYSTEM

SCALE: 1" = 50'

E-13

APPROVED FOR ELECTRICAL WORK ONLY

STATE OF CALIFORNIA - DEPARTMENT OF TRANSPORTATION
Caltrans
DESIGN
CONSULTANT FUNCTIONAL SUPERVISOR: WILLIAM SUN
CALCULATED-DESIGNED BY: W. SUN
CHECKED BY: B. YAU
REVISED BY
DATE REVISED

LAST REVISION 00-00-00 | DATE PLOTTED => 09-MAY-2016 | TIME PLOTTED => 16:04

Dist	COUNTY	ROUTE	POST MILES TOTAL PROJECT	SHEET No.	TOTAL SHEETS
07	LA	60	R24.4/R25.3	216	384

REGISTERED CIVIL ENGINEER 1-15-16 DATE

3-14-16
PLANS APPROVAL DATE

REGISTERED PROFESSIONAL ENGINEER WILLIAM SUN No. 57664 Exp. 12/31/17 CIVIL STATE OF CALIFORNIA

THE STATE OF CALIFORNIA OR ITS OFFICERS OR AGENTS SHALL NOT BE RESPONSIBLE FOR THE ACCURACY OR COMPLETENESS OF SCANNED COPIES OF THIS PLAN SHEET.

LIN CONSULTING, INC.
21660 E. COPLEY DRIVE
#270
DIAMOND BAR, CA 91765

CITY OF INDUSTRY
15651 E. STAFFORD STREET
CITY OF INDUSTRY, CA 91744

NOTE: (THIS SHEET ONLY)

FOR ACCURATE RIGHT OF WAY DATA, CONTACT RIGHT OF WAY ENGINEERING AT THE DISTRICT OFFICE.

LEGEND: (THIS SHEET ONLY)

WORK AREA

1 EXISTING 120/240 V TYPE III-CF SERVICE EQUIPMENT ENCLOSURE
Ctid: 0753060R024450
ADDRESS: 526 ½ GRAND Ave, DIAMOND BAR, CA
METER 1:
100 A, 240 V, 2P (MAIN BREAKER)
50 A, 120 V, 1P (SIGNAL)
20 A, 120 V, 1P (PEC)
40 A, 240 V, 2P (HWY SIGNS)
20 A, 120 V, 1P (IISNS)
Ctid: 0753060R024445M
ADDRESS: 525 GRAND Ave, DIAMOND BAR, CA
METER 2:
100 A, 240 V, 2P (MAIN BREAKER)
40 A, 240 V, 2P (LIGHTING)
20 A, 120 V, 1P (SAFETY LIGHTING)
40 A, 120 V, 1P (RAMP METERING)

2 INSTALL DEPARTMENT-FURNISHED MODEL 2070 CONTROLLER ASSEMBLY WITH MODEL 334 CONTROLLER CABINET AND FOUNDATION. INSTALL ETHERNET SWITCH TYPE 1, MICROWAVE SENSOR INTERFACE CARD AND MICROWAVE RECEIVER FOR MVDS. CABINET MUST BE INSTALLED A MINIMUM 30' FROM THE EDGE OF TRAVELED WAY. SEE ELECTRICAL DETAILS (MODEL 334 CONTROLLER FOR RMS) SHEET

3 INSTALL 2#6, 1#8 (G) IN 2" CONDUIT (TYPE H) RISER

4 INSTALL MVDS AND PHOTOVOLTAIC POWER SUPPLY ON TEMPORARY WOOD POLE. FOR INSTALLATION DETAILS SEE ELECTRICAL DETAILS SHEET

(TR) - TAMPER RESISTANT COVER FOR PULL BOX

CONDUIT AND CONDUCTOR SCHEDULE
(THIS SHEET ONLY)

TYPE CABLE	CONDUCTOR RUN	1	2	3	4	5
#6	SERVICE	2	2	2	2	2
#8	EGC	1	1	1	1	2
CONDUIT SIZE		2"	OH	2"	(E) 2"	2-3"

(E) = EXISTING

(MODIFY RAMP METERING SYSTEM)
(STAGE 2A)

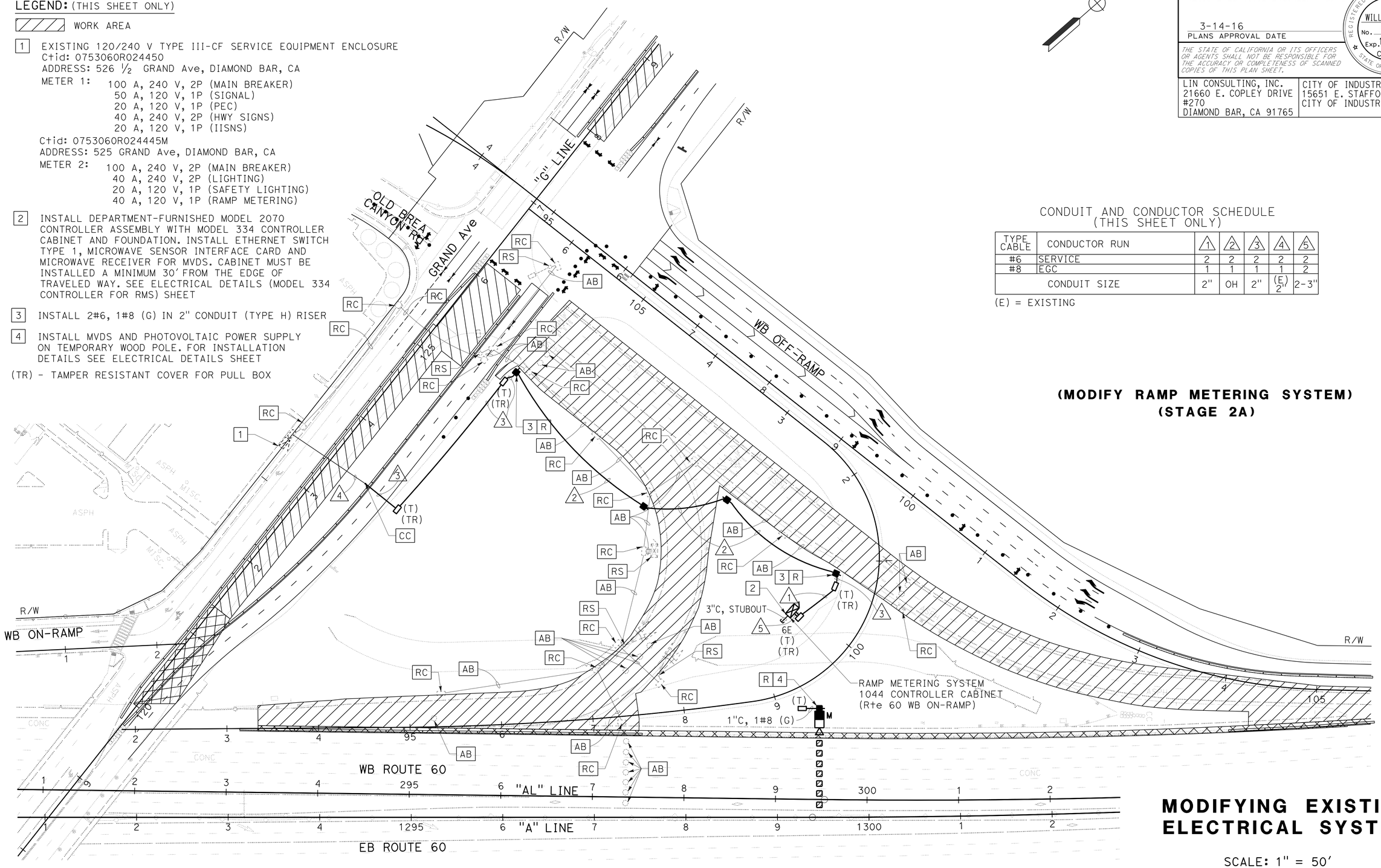

MODIFYING EXISTING ELECTRICAL SYSTEM

SCALE: 1" = 50'

E-14

APPROVED FOR ELECTRICAL WORK ONLY

STATE OF CALIFORNIA - DEPARTMENT OF TRANSPORTATION
Caltrans
DESIGN
CONSULTANT FUNCTIONAL SUPERVISOR: WILLIAM SUN
CALCULATED-DESIGNED BY: B. YAU
CHECKED BY: W. SUN
REVISED BY
DATE REVISED

LAST REVISION 00-00-00
DATE PLOTTED => 09-MAY-2016
TIME PLOTTED => 16:04

Dist	COUNTY	ROUTE	POST MILES TOTAL PROJECT	SHEET No.	TOTAL SHEETS
07	LA	60	R24.4/R25.3	217	384

REGISTERED CIVIL ENGINEER — DATE 1-15-16

3-14-16
PLANS APPROVAL DATE

REGISTERED PROFESSIONAL ENGINEER — WILLIAM SUN No. 57664 Exp. 12/31/17 CIVIL — STATE OF CALIFORNIA

THE STATE OF CALIFORNIA OR ITS OFFICERS OR AGENTS SHALL NOT BE RESPONSIBLE FOR THE ACCURACY OR COMPLETENESS OF SCANNED COPIES OF THIS PLAN SHEET.

LIN CONSULTING, INC.
21660 E. COPLEY DRIVE
#270
DIAMOND BAR, CA 91765

CITY OF INDUSTRY
15651 E. STAFFORD STREET
CITY OF INDUSTRY, CA 91744

NOTES: (THIS SHEET ONLY)

FOR ACCURATE RIGHT OF WAY DATA, CONTACT RIGHT OF WAY ENGINEERING AT THE DISTRICT OFFICE.

LEGEND: (THIS SHEET ONLY)

WORK AREA

1. INSTALL RAMP METER SIGNAL PER DETAIL "A" ON MODIFY RAMP METERING SYSTEM (DETAIL) SHEET
2. INSTALL MAINLINE LOOPS PER DETAIL "C" ON MODIFY RAMP METERING SYSTEM (DETAIL) SHEET
3. EXISTING MODEL 2070 CONTROLLER ASSEMBLY AND IP EQUIPMENT WITH MODEL 334 CONTROLLER CABINET
4. INSTALL 12" LED YELLOW FLASHING BEACON ON TYPE 1-A (Mod) STANDARD WITH W3-7 SIGN. SEE DETAIL "B" ON MODIFY RAMP METERING SYSTEM (DETAIL) SHEET
5. INSTALL DETECTOR LOOPS PER DETAIL "D" ON MODIFY RAMP METERING SYSTEM (DETAIL) SHEET
6. EXISTING 120/240 V TYPE III-CF SERVICE EQUIPMENT ENCLOSURE

Ctid: 0753060R024450
ADDRESS: 526 ½ GRAND Ave, DIAMOND BAR, CA
METER 1: 100 A, 240 V, 2P (MAIN BREAKER)
50 A, 120 V, 1P (SIGNAL)
20 A, 120 V, 1P (PEC)
40 A, 240 V, 2P (HWY SIGNS)
20 A, 120 V, 1P (IISNS)

Ctid: 0753060R024445M
ADDRESS: 525 GRAND Ave, DIAMOND BAR, CA
METER 2: 100 A, 240 V, 2P (MAIN BREAKER)
40 A, 240 V, 2P (LIGHTING)
20 A, 120 V, 1P (SAFETY LIGHTING)
40 A, 120 V, 1P (RAMP METERING)

(TR) - TAMPER RESISTANT COVER FOR PULL BOX

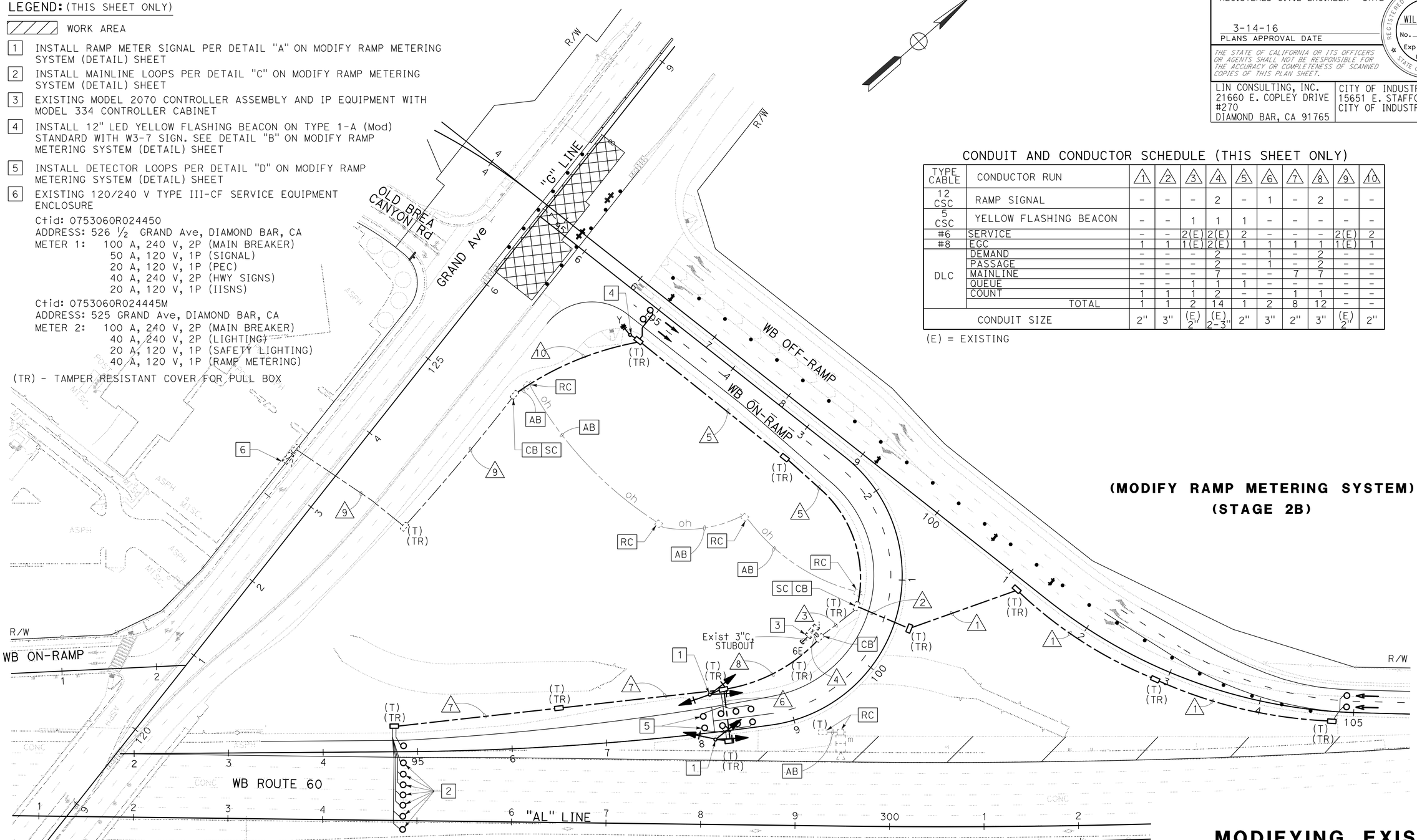

(MODIFY RAMP METERING SYSTEM)
(STAGE 2B)

CONDUIT AND CONDUCTOR SCHEDULE (THIS SHEET ONLY)

TYPE CABLE	CONDUCTOR RUN	1	2	3	4	5	6	7	8	9	10
12 CSC	RAMP SIGNAL	-	-	-	2	-	1	-	2	-	-
5 CSC	YELLOW FLASHING BEACON	-	-	1	1	1	-	-	-	-	-
#6	SERVICE	-	-	2(E)	2(E)	2	-	-	-	2(E)	2
#8	EGC	1	1	1(E)	2(E)	1	1	1	1	1(E)	1
DLC	DEMAND	-	-	-	2	-	1	-	2	-	-
	PASSAGE	-	-	-	2	-	1	-	2	-	-
	MAINLINE	-	-	-	7	-	-	7	7	-	-
	QUEUE	-	-	1	1	1	-	-	-	-	-
	COUNT	1	1	1	2	-	-	1	1	-	-
	TOTAL	1	1	2	14	1	2	8	12	-	-
CONDUIT SIZE		2"	3"	(E) 2"	(E) 2-3"	2"	3"	2"	3"	(E) 2"	2"

(E) = EXISTING

MODIFYING EXISTING ELECTRICAL SYSTEM

SCALE: 1" = 50'

E-15

APPROVED FOR ELECTRICAL WORK ONLY

STATE OF CALIFORNIA - DEPARTMENT OF TRANSPORTATION
Caltrans
DESIGN
CONSULTANT FUNCTIONAL SUPERVISOR: WILLIAM SUN
CALCULATED-DESIGNED BY: B. YAU
CHECKED BY: W. SUN
REVISED BY
DATE REVISED

LAST REVISION 00-00-00
DATE PLOTTED => 09-MAY-2016
TIME PLOTTED => 16:04

Dist	COUNTY	ROUTE	POST MILES TOTAL PROJECT	SHEET No.	TOTAL SHEETS
07	LA	60	R24.4/R25.3	218	384

REGISTERED CIVIL ENGINEER — DATE 1-15-16

3-14-16
PLANS APPROVAL DATE

REGISTERED PROFESSIONAL ENGINEER — WILLIAM SUN — No. 57664 — Exp. 12/31/17 — CIVIL — STATE OF CALIFORNIA

THE STATE OF CALIFORNIA OR ITS OFFICERS OR AGENTS SHALL NOT BE RESPONSIBLE FOR THE ACCURACY OR COMPLETENESS OF SCANNED COPIES OF THIS PLAN SHEET.

LIN CONSULTING, INC.
21660 E. COPLEY DRIVE
#270
DIAMOND BAR, CA 91765

CITY OF INDUSTRY
15651 E. STAFFORD STREET
CITY OF INDUSTRY, CA 91744

NOTES: (THIS SHEET ONLY)

1. FOR ACCURATE RIGHT OF WAY DATA, CONTACT RIGHT OF WAY ENGINEERING AT THE DISTRICT OFFICE.
2. ALL NEW PULL BOXES MUST BE TRAFFIC TYPE WITH TAMPER RESISTANT COVER.

LEGEND: (THIS SHEET ONLY)

WORK AREA

1 EXISTING DEPARTMENT-FURNISHED MODEL 2070 CONTROLLER ASSEMBLY AND IP EQUIPMENT WITH MODEL 334 CONTROLLER CABINET

2 RC 120/240 V TYPE III-CF SERVICE EQUIPMENT ENCLOSURE
Ctid: 0753060R024450
ADDRESS: 526 ½ GRAND Ave, DIAMOND BAR, CA
METER 1: 100 A, 240 V, 2P (MAIN BREAKER)
50 A, 120 V, 1P (SIGNAL)
20 A, 120 V, 1P (PEC)
40 A, 240 V, 2P (HWY SIGNS)
20 A, 120 V, 1P (IISNS)
Ctid: 0753060R024445M
ADDRESS: 525 GRAND Ave, DIAMOND BAR, CA
METER 2: 100 A, 240 V, 2P (MAIN BREAKER)
40 A, 240 V, 2P (LIGHTING)
20 A, 120 V, 1P (SAFETY LIGHTING)
40 A, 120 V, 1P (RAMP METERING)

3 INSTALL 3"C, PT. CONDUIT PER SCE'S REQUIREMENT, CONDUCTORS ARE TO BE INSTALLED BY SCE

4 INSTALL 120/ 240 V TYPE III-CF SERVICE EQUIPMENT ENCLOSURE ON NEW FOUNDATION
Ctid: 0753060R24441
ADDRESS: 521 U GRAND Ave, DIAMOND BAR, CA
METER No. 1: 100 A, 240 V, 2P CB (MAIN BREAKER)
50 A, 120 V, 1P CB (SIGNAL)
30 A, 120 V, 1P CB (SAFETY LIGHTING)
15 A, 120 V. 1P CB (PEC)
15 A, 120 V, 1P CB (IISNS)
Ctid: 0753060R24443
ADDRESS: 521 U1 GRAND Ave, DIAMOND BAR, CA
METER No. 2: 100 A, 240 V, 2P CB (MAIN BREAKER)
30 A, 240 V, 2P CB (LIGHTING)
15 A, 120 V, 1P CB (LIGHTING CONTROL)
30 A, 120 V, 1P CB (RAMP METERING)
15 A, 120 V, 1P CB (IRRIGATION)

EXISTING CONDUIT AND CONDUCTOR SCHEDULE (THIS SHEET ONLY)

TYPE CABLE	CONDUCTOR RUN	1	2	3	4	5	6	7	8	9	10
12 CSC	RAMP SIGNAL	-	-	-	2	-	1	-	2	-	-
5 CSC	YELLOW FLASHING BEACON	-	-	1	1	1	-	-	-	-	-
#6	SERVICE	-	-	2	2	2	-	-	-	2	2(N)
#8	EGC	1	1	1	1	1	1	1	1	1	1(N)
DLC	DEMAND	-	-	-	2	-	1	-	2	-	-
	PASSAGE	-	-	-	2	-	1	-	2	-	-
	MAINLINE	-	-	-	7	-	-	7	7	-	-
	QUEUE	-	-	1	1	1	-	-	-	-	-
	COUNT	1	1	1	2	-	-	1	1	-	-
	TOTAL	1	1	2	14	1	2	8	12	-	-
CONDUIT SIZE		2"	3"	2"	2-3"	2"	3"	2"	3"	2"	2"(N)

(N) = NEW

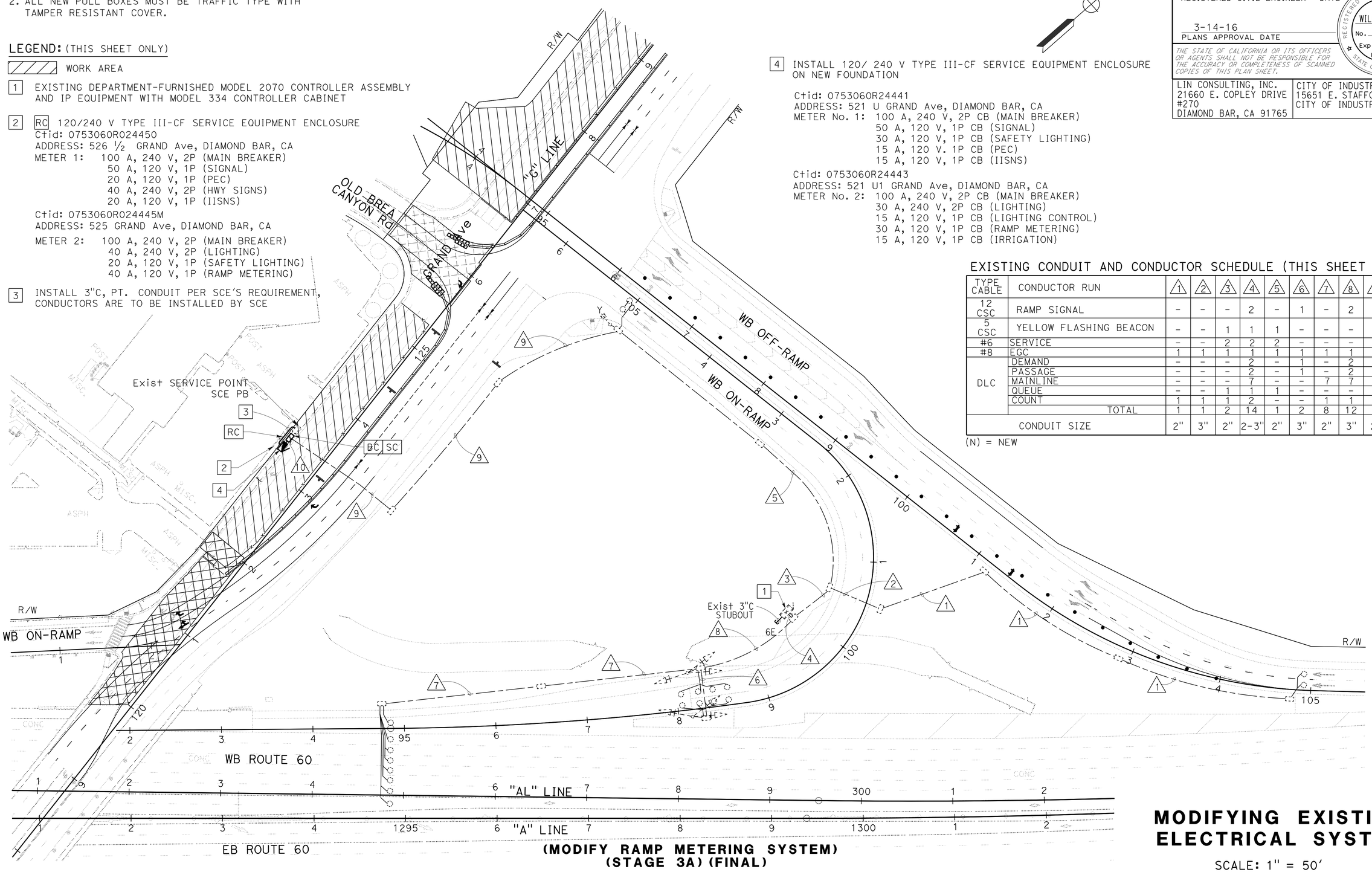

(MODIFY RAMP METERING SYSTEM)
(STAGE 3A) (FINAL)

APPROVED FOR ELECTRICAL WORK ONLY

MODIFYING EXISTING ELECTRICAL SYSTEM

SCALE: 1" = 50'

E-16

STATE OF CALIFORNIA - DEPARTMENT OF TRANSPORTATION
Caltrans® DESIGN
CONSULTANT FUNCTIONAL SUPERVISOR: WILLIAM SUN
CALCULATED-DESIGNED BY: B. YAU
CHECKED BY: W. SUN
REVISED BY / DATE REVISED

LAST REVISION 00-00-00
DATE PLOTTED => 09-MAY-2016
TIME PLOTTED => 16:04

Dist	COUNTY	ROUTE	POST MILES TOTAL PROJECT	SHEET No.	TOTAL SHEETS
07	LA	60	R24.4/R25.3	219	384

REGISTERED CIVIL ENGINEER — DATE 1-15-16

PLANS APPROVAL DATE 3-14-16

REGISTERED PROFESSIONAL ENGINEER — WILLIAM SUN No. 57664 Exp. 12/31/17 CIVIL — STATE OF CALIFORNIA

THE STATE OF CALIFORNIA OR ITS OFFICERS OR AGENTS SHALL NOT BE RESPONSIBLE FOR THE ACCURACY OR COMPLETENESS OF SCANNED COPIES OF THIS PLAN SHEET.

LIN CONSULTING, INC.
21660 E. COPLEY DRIVE
#270
DIAMOND BAR, CA 91765

CITY OF INDUSTRY
15651 E. STAFFORD STREET
CITY OF INDUSTRY, CA 91744

LEGEND: (THIS SHEET ONLY)

1. SEE PLANS FOR CONDUIT SIZES AND TYPES OF PULL BOXES. SEE TYPICAL LOOP LEAD-IN DETAIL AT PAVEMENT JOINT ON THIS SHEET
2. SEE DETAIL "E" ON THIS SHEET

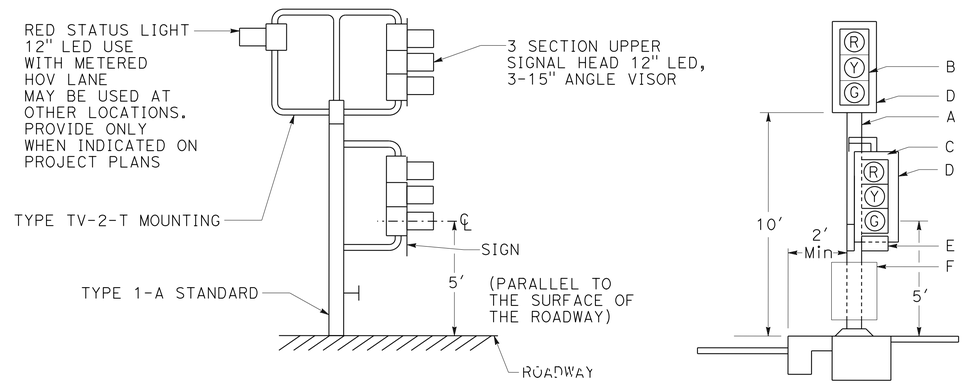

DETAIL "A"
RAMP METER SIGNAL

NOTES:

A. TYPE 1-A SIGNAL STANDARD.

B. 3-SECTION 12" LED SIGNAL HEAD (RED, YELLOW, GREEN). 18" x 7⅞" ANGLED VISORS ARE REQUIRED WHERE SHOWN ON PLANS.

C. 3-SECTION 12" LED SIGNAL HEAD (RED, YELLOW, GREEN). 12" FULL CIRCLE VISORS TYPE SV-1-T BRACKET MOUNTING ON SIDE OF STANDARD, AWAY FROM TRAFFIC.

D. BACKPLATE.

E. 1 CAR PER GREEN THIS LANE

R89-2(CA)

MOUNT ON BACK PLATE AND CENTER BETWEEN GREEN SECTION AND BOTTOM OF BACK PLATES AND SIDES. ATTACH WITH ¼" x ¾" BOLTS, HEX NUTS, PLAIN AND LOCK WASHERS.

F. STOP HERE ON RED

R10-6

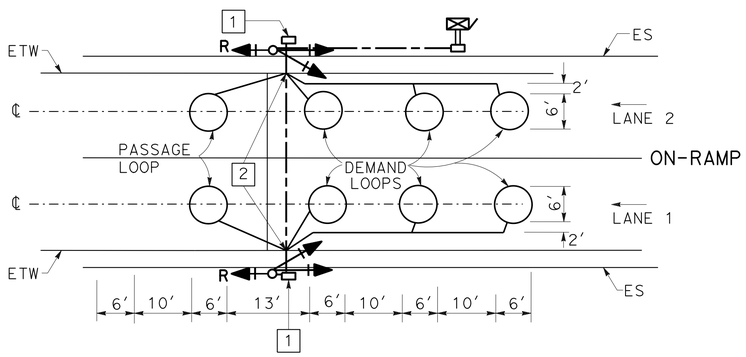

DETAIL "D"
2-LANE RAMP METERING DETECTOR LOOPS LAYOUT

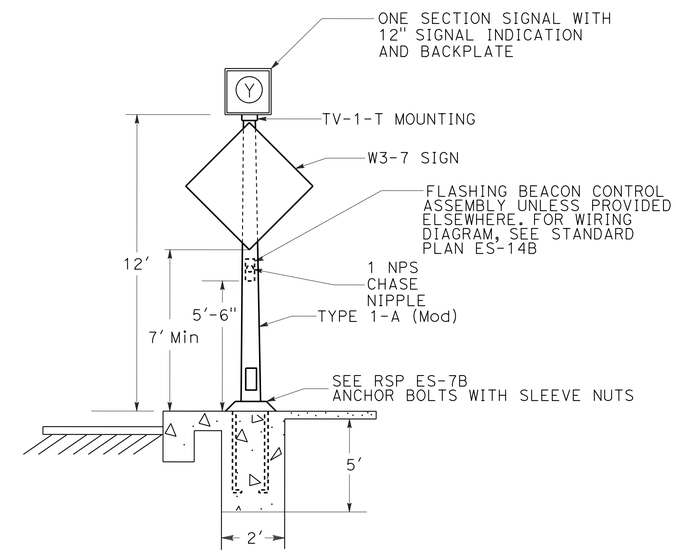

DETAIL "B"
TYPE 1-A (Mod)
ADVANCE FLASHING BEACON INSTALLATION

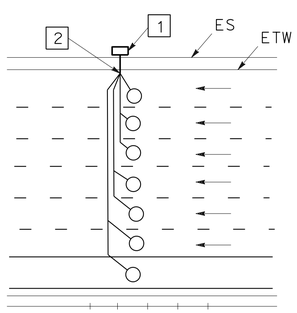

DETAIL "C"
MAINLINE LOOP INSTALLATION

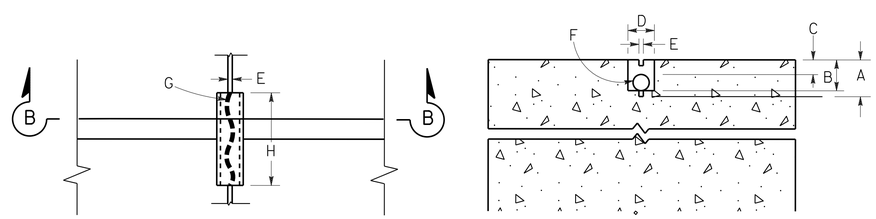

PLAN VIEW — SECTION B-B

NOTES:

A. SAW-CUT DEPTH TO ACCOMMODATE SPECIFIED NUMBER OF CONDUCTORS WITH A MINIMUM OF ½" FROM TOP OF WIRE TO PAVEMENT SURFACE (3 ¼" Max).

B. SLOT SAW-CUT DEPTH TO ACCOMMODATE 1" TYPE 3 CONDUIT WITH ½" MINIMUM FROM TOP OF CONDUIT TO PAVEMENT SURFACE.

C. ½" MINIMUM BETWEEN TOP OF CONDUIT AND PAVEMENT SURFACE.

D. SAW-CUT WIDTH TO ACCOMMODATE 1" TYPE 3 CONDUIT WITH ½" CLEARANCE.

E. SAW-CUT 2/5" WIDE (Max).

F. 1" TYPE 3 CONDUIT, 6" LONG, PLUG BOTH ENDS WITH CAULKING COMPOUND TO KEEP OUT EPOXY.

G. CONDUCTORS WITH ½" MINIMUM SLACK INSIDE CONDUIT.

H. SAW-CUT LENGTH OF SLOT ⅛" LONGER THAN CONDUIT.

DETAIL "E"
TYPICAL LOOP LEAD-IN AT PAVEMENT JOINT

(MODIFY RAMP METERING SYSTEM) (DETAIL)

ELECTRICAL DETAILS

NO SCALE

E-17

STATE OF CALIFORNIA - DEPARTMENT OF TRANSPORTATION — DESIGN — CONSULTANT FUNCTIONAL SUPERVISOR: WILLIAM SUN — CALCULATED-DESIGNED BY: W. SUN — CHECKED BY: B. YAU — REVISED BY — DATE REVISED

LAST REVISION 00-00-00 — DATE PLOTTED => 09-MAY-2016 — TIME PLOTTED => 16:04

Dist	COUNTY	ROUTE	POST MILES TOTAL PROJECT	SHEET No.	TOTAL SHEETS
07	LA	60	R24.4/R25.3	220	384

REGISTERED CIVIL ENGINEER 1-15-16 DATE

3-14-16
PLANS APPROVAL DATE

REGISTERED PROFESSIONAL ENGINEER WILLIAM SUN No. 57664 Exp. 12/31/17 CIVIL STATE OF CALIFORNIA

THE STATE OF CALIFORNIA OR ITS OFFICERS OR AGENTS SHALL NOT BE RESPONSIBLE FOR THE ACCURACY OR COMPLETENESS OF SCANNED COPIES OF THIS PLAN SHEET.

LIN CONSULTING, INC.
21660 E. COPLEY DRIVE
#270
DIAMOND BAR, CA 91765

CITY OF INDUSTRY
15651 E. STAFFORD STREET
CITY OF INDUSTRY, CA 91744

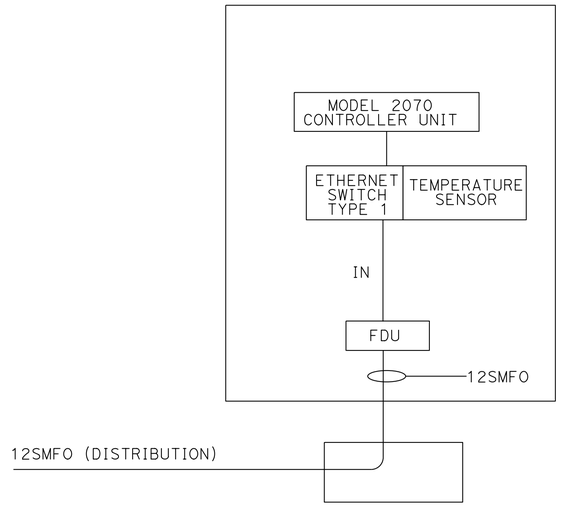

NEW OR Exist MODEL 334 CONTROLLER ASSEMBLY WIRING DETAIL FOR RMS

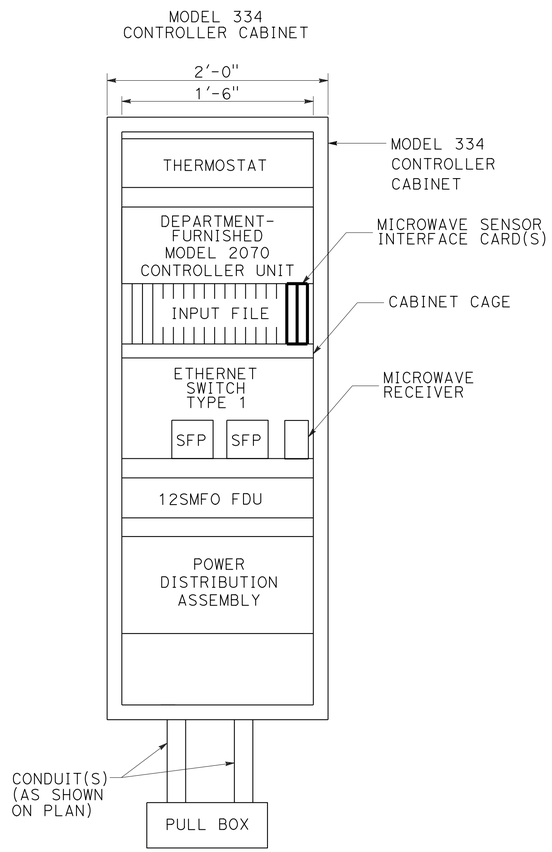

TYPICAL MODEL 334 CONTROLLER CABINET EQUIPMENT LAYOUT FOR RMS

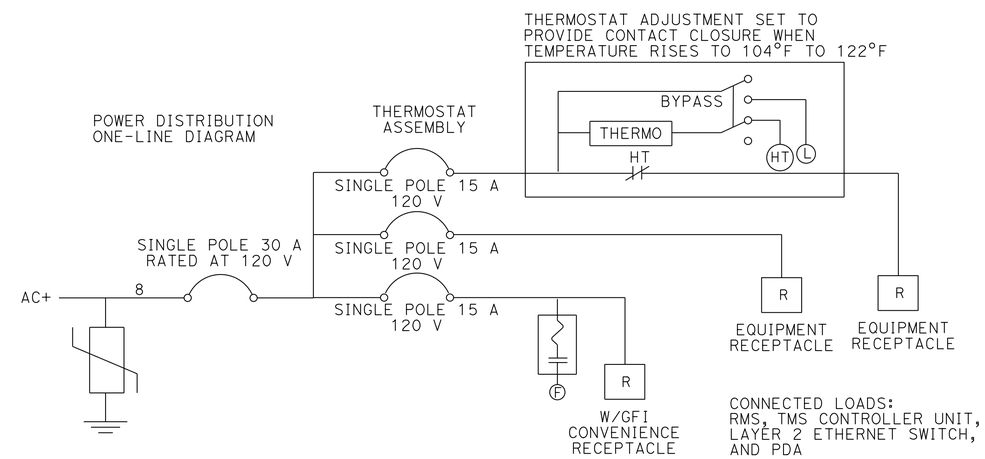

TYPICAL POWER DISTRIBUTION ASSEMBLY

ELECTRICAL DETAILS
(MODEL 334 CONTROLLER FOR RMS)

NO SCALE

E-18

STATE OF CALIFORNIA - DEPARTMENT OF TRANSPORTATION
Caltrans®
DESIGN
CONSULTANT FUNCTIONAL SUPERVISOR: WILLIAM SUN
CALCULATED-DESIGNED BY: B. YAU
CHECKED BY: W. SUN
REVISED BY
DATE REVISED

LAST REVISION 00-00-00
DATE PLOTTED => 09-MAY-2016
TIME PLOTTED => 16:04

Dist	COUNTY	ROUTE	POST MILES TOTAL PROJECT	SHEET No.	TOTAL SHEETS
07	LA	60	R24.4/R25.3	221	384

REGISTERED CIVIL ENGINEER 1-15-16 DATE

3-14-16
PLANS APPROVAL DATE

REGISTERED PROFESSIONAL ENGINEER WILLIAM SUN No. 57664 Exp. 12/31/17 CIVIL STATE OF CALIFORNIA

THE STATE OF CALIFORNIA OR ITS OFFICERS OR AGENTS SHALL NOT BE RESPONSIBLE FOR THE ACCURACY OR COMPLETENESS OF SCANNED COPIES OF THIS PLAN SHEET.

LIN CONSULTING, INC.
21660 E. COPLEY DRIVE
#270
DIAMOND BAR, CA 91765

CITY OF INDUSTRY
15651 E. STAFFORD STREET
CITY OF INDUSTRY, CA 91744

LEGEND: (THIS SHEET ONLY)

1. TEMPORARY 40 FOOT WOOD POLE
2. SENSOR UNIT DIRECTED TOWARD TRAFFIC LANES PER MANUFACTURER'S RECOMMENDATIONS
3. PHOTOVOLTAIC PANEL FACE MUST BE PLACED AND DIRECTED WHERE OBSTRUCTIONS TO SUNLIGHT ARE AVOIDED. ATTACH HARDWARE TO PANEL PER MANUFACTURER'S RECOMMENDATIONS. PHOTOVOLTAIC PANEL MAXIMUM AREA IS 11 SQUARE FEET. SEE DETAIL "B" ON ELECTRICAL DETAILS (MVDS-PHOTOVOLTAIC) SHEET FOR PHOTOVOLTAIC PANEL DETAILS
4. SEE DETAIL "A", ON RIGHT, FOR SENSOR UNIT ATTACHMENT. MOUNTING PLATE, ARTICULATING JOINT, AND SENSOR UNIT ASSEMBLY CONNECTIONS PER MANUFACTURER'S RECOMMENDATIONS
5. MOUNTING HEIGHT PER MANUFACTURER'S RECOMMENDATION AND ENGINEER'S APPROVAL
6. EQUIPMENT AND BATTERY TYPE 4X NEMA ENCLOSURE. SEE DETAIL "C" ON ELECTRICAL DETAILS (MVDS-EQUIPMENT AND BATTERY ENCLOSURE) SHEET FOR ENCLOSURE MOUNTING DETAILS. SEE ELECTRICAL DETAILS (MVDS-EQUIPMENT ENCLOSURE LAYOUT) SHEET FOR ENCLOSURE EQUIPMENT DETAILS
7. OFFSET FROM ETW PER MANUFACTURER'S RECOMMENDATIONS AND ENGINEER'S APPROVAL. PROVIDE 30 FEET MINIMUM CLEARANCE FROM ETW UNLESS K-RAIL OR MBGR IS PROVIDED TO PROTECT POLE

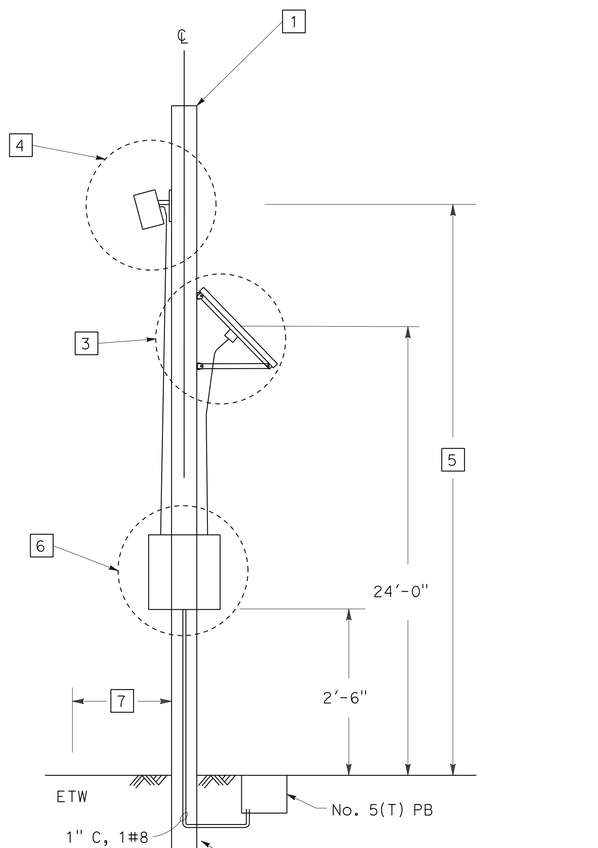

MICROWAVE VEHICLE DETECTION SYSTEM

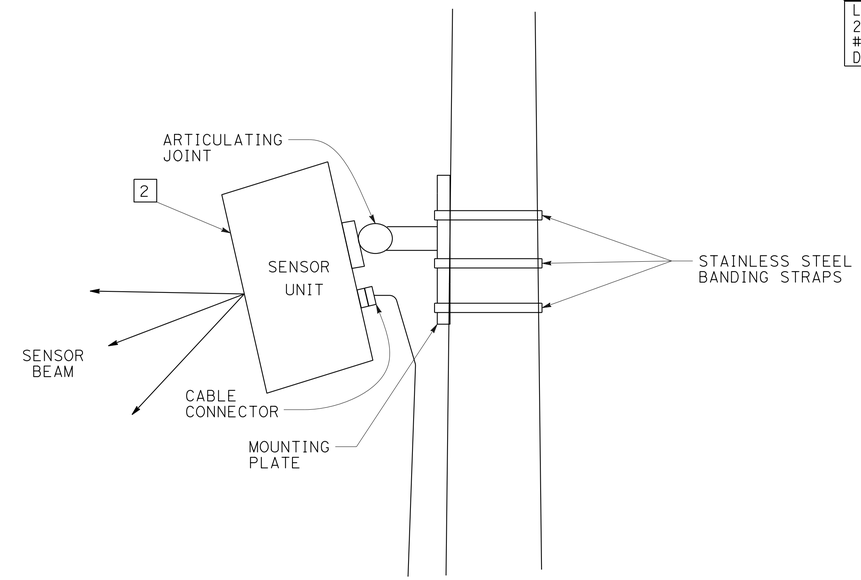

DETAIL "A"
PROFILE VIEW

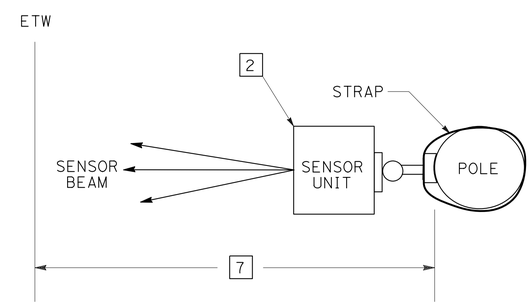

DETAIL "A"
PLAN VIEW

ELECTRICAL DETAILS
(MVDS-GENERAL)
NO SCALE

E-19

STATE OF CALIFORNIA - DEPARTMENT OF TRANSPORTATION
Caltrans® DESIGN
CONSULTANT FUNCTIONAL SUPERVISOR: WILLIAM SUN
CALCULATED-DESIGNED BY: B. YAU
CHECKED BY: W. SUN
REVISED BY
DATE REVISED

LAST REVISION 00-00-00
DATE PLOTTED => 09-MAY-2016
TIME PLOTTED => 16:04

Dist	COUNTY	ROUTE	POST MILES TOTAL PROJECT	SHEET No.	TOTAL SHEETS
07	LA	60	R24.4/R25.3	222	384

REGISTERED CIVIL ENGINEER 1-15-16 DATE

3-14-16
PLANS APPROVAL DATE

REGISTERED PROFESSIONAL ENGINEER WILLIAM SUN No. 57664 Exp. 12/31/17 CIVIL STATE OF CALIFORNIA

THE STATE OF CALIFORNIA OR ITS OFFICERS OR AGENTS SHALL NOT BE RESPONSIBLE FOR THE ACCURACY OR COMPLETENESS OF SCANNED COPIES OF THIS PLAN SHEET.

LIN CONSULTING, INC.
21660 E. COPLEY DRIVE
#270
DIAMOND BAR, CA 91765

CITY OF INDUSTRY
15651 E. STAFFORD STREET
CITY OF INDUSTRY, CA 91744

LEGEND: (THIS SHEET ONLY)

1. ATTACH "L" BRACE TO PHOTOVOLTAIC PANEL FRAME PER MANUFACTURER'S RECOMMENDATIONS
2. JUNCTION BOX
3. ½"C, FLEXIBLE
4. 123 TO 130 WATTS SOLAR PANEL, WEIGHT MUST NOT EXCEED 31 Lbs
5. 65 WATTS PHOTOVOLTAIC PANEL, WEIGHT MUST NOT EXCEED 16 Lbs
6. "U" CHANNEL WITH ANGLE BRACKET
7. INSTALL A SECOND PHOTOVOLTAIC PANEL PER DETAIL "B" WHEN REQUIRED
8. THE AREA, L X W, MUST NOT EXCEED 6 SQUARE FEET. THE W DIMENSION MUST BE GREATER THAN 2.2 FEET. THE L DIMENSION MUST BE THE LONGEST EDGE
9. PHOTOVOLTAIC PANEL FACE

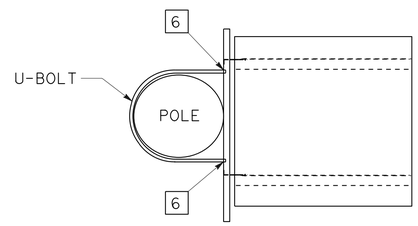

DETAIL "B"
PLAN VIEW

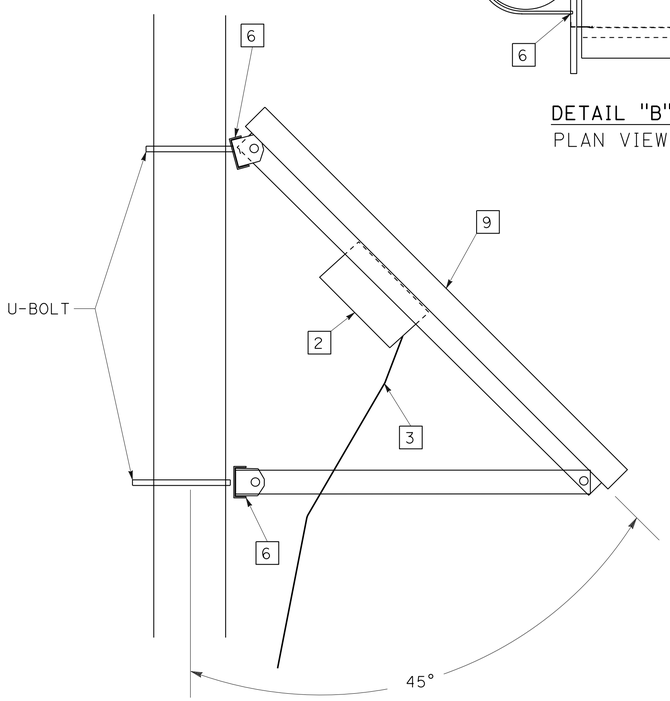

DETAIL "B"
PROFILE VIEW

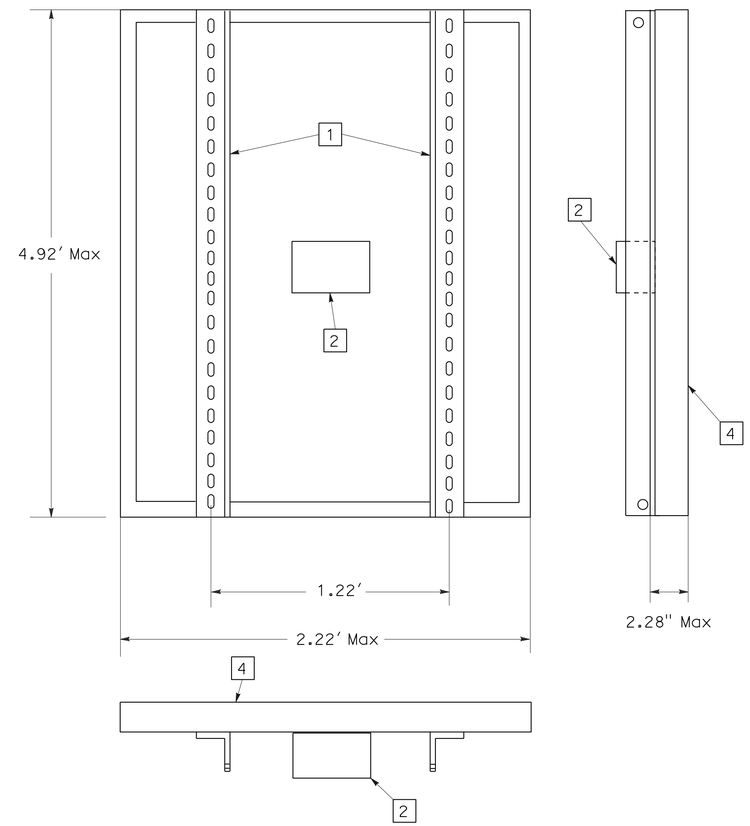

123 TO 130 WATTS SOLAR PANEL

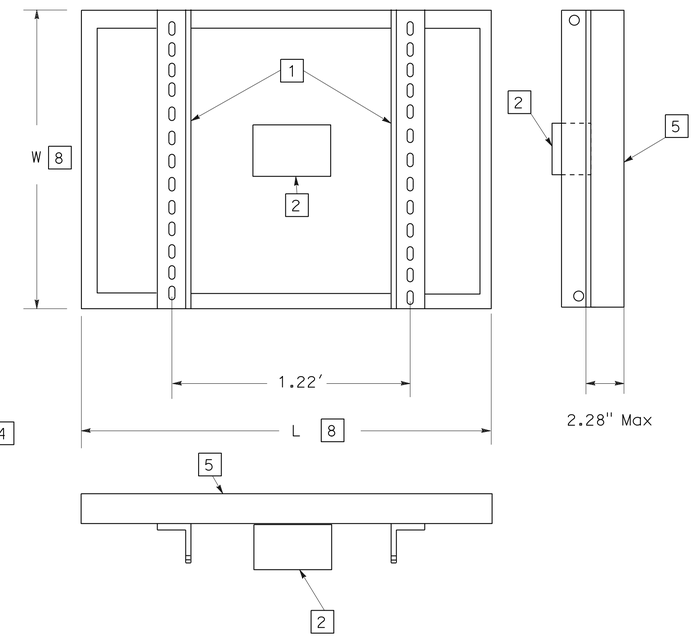

7 65 WATTS SOLAR PANEL

ELECTRICAL DETAILS
(MVDS-PHOTOVOLTAIC)

NO SCALE

E-20

STATE OF CALIFORNIA - DEPARTMENT OF TRANSPORTATION
Caltrans® DESIGN
CONSULTANT FUNCTIONAL SUPERVISOR: WILLIAM SUN
CALCULATED-DESIGNED BY: W. SUN
CHECKED BY: B. YAU
REVISED BY
DATE REVISED

LAST REVISION 00-00-00
DATE PLOTTED => 09-MAY-2016
TIME PLOTTED => 16:04

Dist	COUNTY	ROUTE	POST MILES TOTAL PROJECT	SHEET No.	TOTAL SHEETS
07	LA	60	R24.4/R25.3	223	384

REGISTERED CIVIL ENGINEER 1-15-16 DATE

3-14-16
PLANS APPROVAL DATE

REGISTERED PROFESSIONAL ENGINEER WILLIAM SUN No. 57664 Exp. 12/31/17 CIVIL STATE OF CALIFORNIA

THE STATE OF CALIFORNIA OR ITS OFFICERS OR AGENTS SHALL NOT BE RESPONSIBLE FOR THE ACCURACY OR COMPLETENESS OF SCANNED COPIES OF THIS PLAN SHEET.

LIN CONSULTING, INC.
21660 E. COPLEY DRIVE
#270
DIAMOND BAR, CA 91765

CITY OF INDUSTRY
15651 E. STAFFORD STREET
CITY OF INDUSTRY, CA 91744

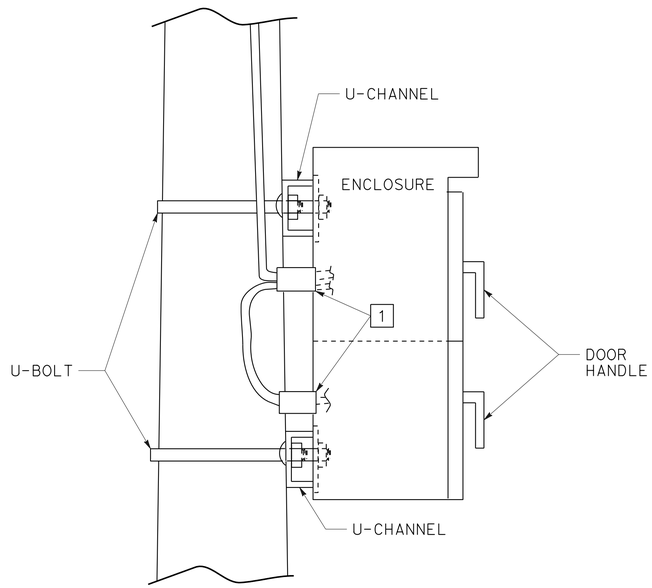

DETAIL "C"
PROFILE VIEW

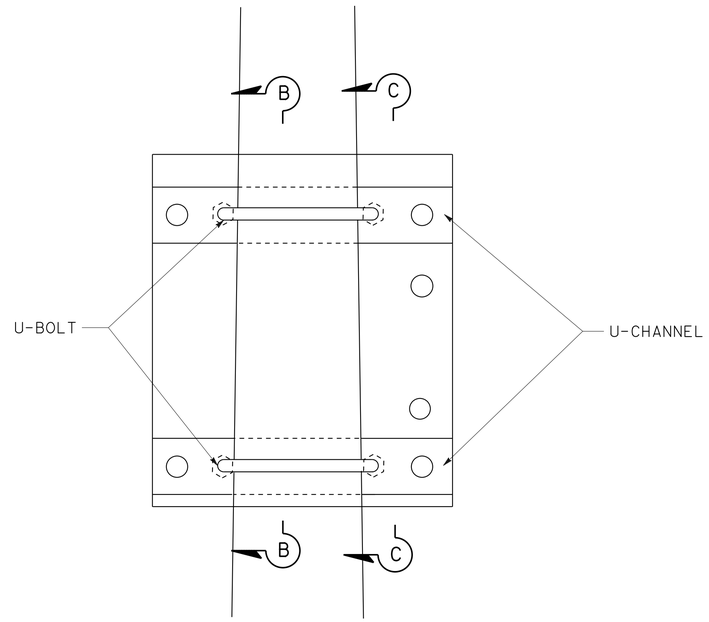

DETAIL "C"
SECTION A-A

LEGEND: (THIS SHEET ONLY)

1 2" RECESSED COUPLING

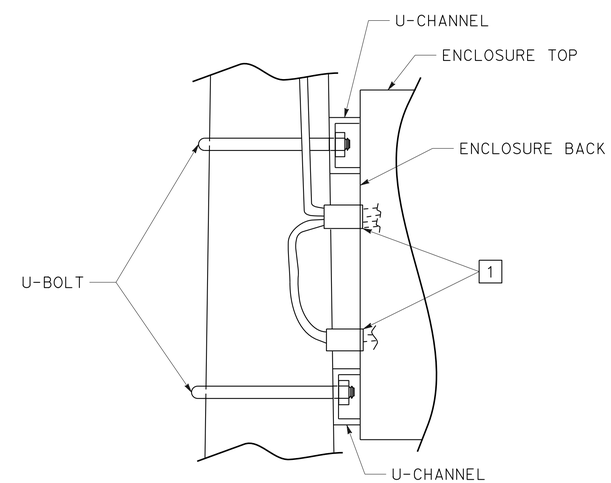

DETAIL "C"
SECTION C-C

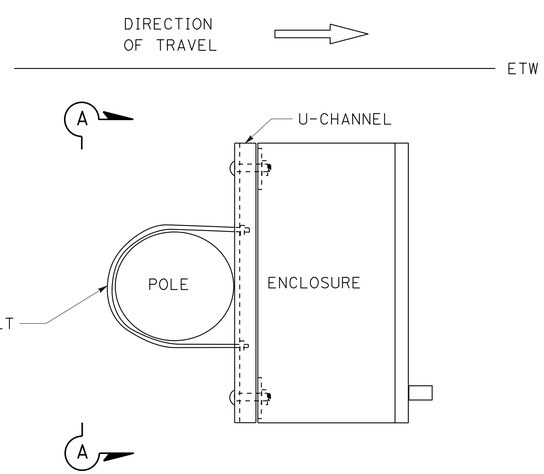

DETAIL "C"
PLAN VIEW

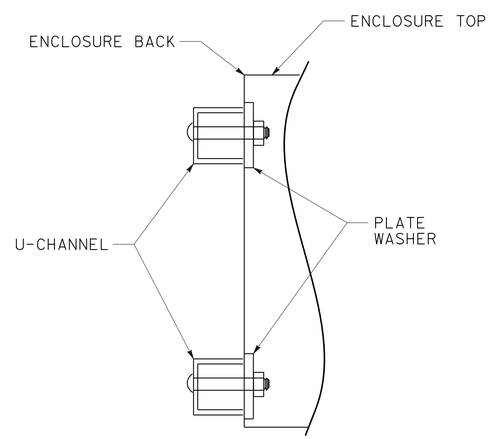

DETAIL "C"
SECTION B-B

ELECTRICAL DETAILS
(MVDS-EQUIPMENT AND BATTERY ENCLOSURE)

NO SCALE

E-21

STATE OF CALIFORNIA - DEPARTMENT OF TRANSPORTATION
Caltrans
DESIGN
CONSULTANT FUNCTIONAL SUPERVISOR: WILLIAM SUN
CALCULATED-DESIGNED BY: B. YAU
CHECKED BY: W. SUN
REVISED BY
DATE REVISED

LAST REVISION 00-00-00
DATE PLOTTED => 09-MAY-2016
TIME PLOTTED => 16:05

Dist	COUNTY	ROUTE	POST MILES TOTAL PROJECT	SHEET No.	TOTAL SHEETS
07	LA	60	R24.4/R25.3	224	384

REGISTERED CIVIL ENGINEER 1-15-16 DATE

3-14-16
PLANS APPROVAL DATE

REGISTERED PROFESSIONAL ENGINEER WILLIAM SUN No. 57664 Exp. 12/31/17 CIVIL STATE OF CALIFORNIA

THE STATE OF CALIFORNIA OR ITS OFFICERS OR AGENTS SHALL NOT BE RESPONSIBLE FOR THE ACCURACY OR COMPLETENESS OF SCANNED COPIES OF THIS PLAN SHEET.

LIN CONSULTING, INC.
21660 E. COPLEY DRIVE
#270
DIAMOND BAR, CA 91765

CITY OF INDUSTRY
15651 E. STAFFORD STREET
CITY OF INDUSTRY, CA 91744

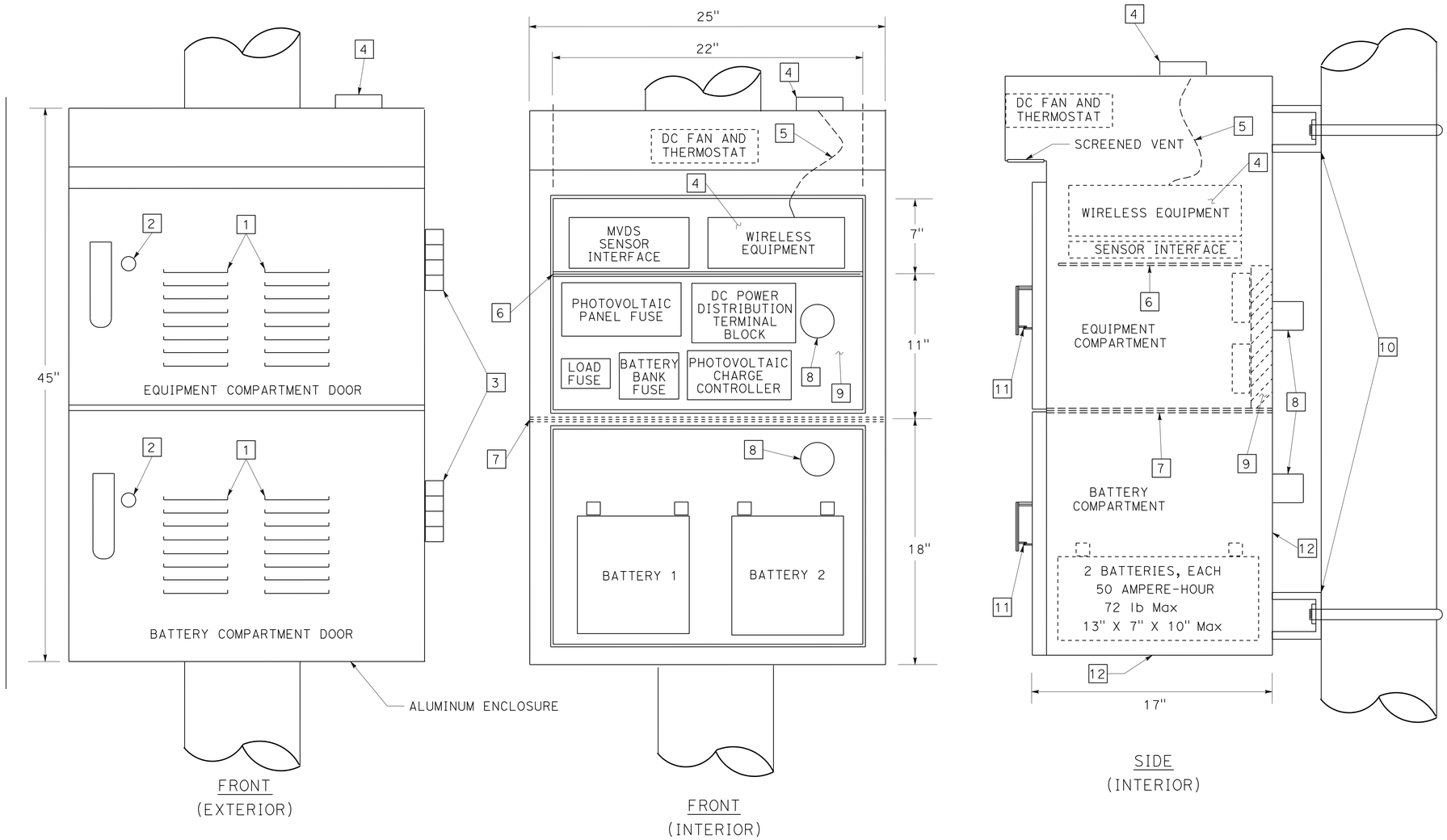

POLE MOUNTED EQUIPMENT ENCLOSURE AND EQUIPMENT LAYOUT

NOTES: (THIS SHEET ONLY)

1. ALL CONTROLLING FIELD DIMENSIONS MUST BE VERIFIED BEFORE ORDERING OR FABRICATING MATERIAL.
2. EQUIPMENT MUST BE CONNECTED PER MANUFACTURER'S SPECIFICATIONS.
3. THE ENCLOSURE MUST BE ALUMINUM WALLS, DOORS AND SHELVES WITH A THICKNESS OF 1/8", UNLESS OTHERWISE NOTED.

LEGEND: (THIS SHEET ONLY)

1. FILTERED VENTILATION LOUVERS
2. KEY LOCK AND THREE POINT LOCKING SYSTEM MUST BE INTEGRATED WITH DOOR HANDLE. ROLLERS SHALL BE USED IN CONJUNCTION WITH THE THREE POINT LOCKING SYSTEM
3. DOOR HINGE
4. PROVIDE WIRELESS EQUIPMENT FOR USE IN TEMPORARY RMS. REPLACE WIRELESS EQUIPMENT WITH GPRS EDGE MODEM. PROVIDE APPROPRIATE ANTENNA FOR TEMPORARY RMS
5. INSTALL ANTENNA CABLE
6. ALUMINUM SHELF REQUIRED FOR EQUIPMENT. 2" SPACE BETWEEN SHELF AND ENCLOSURE BACK WALL REQUIRED
7. ALUMINUM SHELF REQUIRED TO PROVIDE SEPARATION OF EQUIPMENT AND BATTERY COMPARTMENTS. THE SHELF EDGE MUST EXTEND TO ALL FOUR ENCLOSURE WALLS. SPACES BETWEEN THE SHELF AND ENCLOSURE WALLS MUST BE SEALED
8. SEAL OPENING AROUND CONDUCTORS
9. BACK MOUNTING BOARD (1/2" THICK AND GRADE ACX PLYWOOD)
10. SEE DETAIL "C", ON ELECTRICAL DETAILS (MVDS-EQUIPMENT AND BATTERY ENCLOSURE) FOR ENCLOSURE MOUNTING DETAILS
11. DOOR HANDLE TO ENCLOSURE PADLOCK LATCH
12. ALUMINUM ENCLOSURE SHALL BE 1/4" THICK, BOTTOM AND BACK WALL OF ENCLOSURE

ELECTRICAL DETAILS
(MVDS-EQUIPMENT ENCLOSURE LAYOUT)

NO SCALE

E-22

STATE OF CALIFORNIA - DEPARTMENT OF TRANSPORTATION
Caltrans®
DESIGN

CONSULTANT FUNCTIONAL SUPERVISOR: WILLIAM SUN
CALCULATED-DESIGNED BY: W. SUN
CHECKED BY
REVISED BY: B. YAU
DATE REVISED

LAST REVISION 00-00-00
DATE PLOTTED => 09-MAY-2016
TIME PLOTTED => 16:05

Dist	COUNTY	ROUTE	POST MILES TOTAL PROJECT	SHEET No.	TOTAL SHEETS
07	LA	60	R24.4/R25.3	225	384

REGISTERED CIVIL ENGINEER 1-15-16 DATE

3-14-16
PLANS APPROVAL DATE

REGISTERED PROFESSIONAL ENGINEER WILLIAM SUN No. 57664 Exp. 12/31/17 CIVIL STATE OF CALIFORNIA

THE STATE OF CALIFORNIA OR ITS OFFICERS OR AGENTS SHALL NOT BE RESPONSIBLE FOR THE ACCURACY OR COMPLETENESS OF SCANNED COPIES OF THIS PLAN SHEET.

LIN CONSULTING, INC.
21660 E. COPLEY DRIVE
#270
DIAMOND BAR, CA 91765

CITY OF INDUSTRY
15651 E. STAFFORD STREET
CITY OF INDUSTRY, CA 91744

EXISTING CONDUIT AND CONDUCTOR SCHEDULE

CABLE SCHEDULE		CONDUIT RUN NUMBER									
CABLE TYPE		1	2	3	4	5	6	7	8	9	10
AWG	CIRCUIT										
#10	LIGHTING	2	2	2	2		2	2	2		
#12	IISNS	2	2	2	2			2	2		
#4	SERVICE									2	
#8	GROUND	1(N)	1(N)	1(N)	1(N)	1(N)	1(N)	1(N)	1(N)	2(N)	1(N)
LOOP DLC											
PHASE 2					4(N)					4(N)	
PHASE 3			6	6	6					6	
PHASE 4									2	2	
PHASE 6							3+3(N)	3+3(N)	3+3(N)	3+3(N)	
TOTAL			6	6	6+4(N)		3+3(N)	3+3(N)	5+3(N)	11+7(N)	
SIC										1(N)	1(N)
28 CSC		2	2	2	2		2	2	2	4	
CONDUIT SIZE		3"	3"	3"	3"	3"	3"	3"	3"	2-3"	2"(N)

(N) = NEW

LEGEND: (FOR SHEETS E-23 AND E-24)

1. EXISTING MODEL 2070L CONTROLLER ASSEMBLY AND MODEL 332 CONTROLLER CABINET WITH BBS
2. EXISTING 120/240 V TYPE III-CF SERVICE EQUIPMENT ENCLOSURE
   C†id: 0753060R024450
   ADDRESS: 526 ½ GRAND Ave, DIAMOND BAR, CA
   METER No. 1: 100 A, 240 V, 2P CB (MAIN BREAKER)
   50 A, 120 V, 1P CB (SIGNAL)
   20 A, 120 V, 1P CB (PEC)
   40 A, 240 V, 2P CB (HWY SIGNS)
   20 A, 120 V, 1P CB (IISNS)
   C†id: 0753060R024445M
   ADDRESS: 525 GRAND Ave, DIAMOND BAR, CA
   METER No. 2: 100 A, 240 V, 2P CB (MAIN BREAKER)
   40 A, 240 V, 2P CB (LIGHTING)
   20 A, 120 V, 1P CB (SAFETY LIGHTING)
   40 A, 120 V, 1P CB (RAMP METERING)
3. INSTALL OVERHEAD LINE WITH A MINIMUM OF 25 FEET CLEARANCE ABOVE ROADWAY SURFACE AND PROVIDE DEAD-END ASSEMBLIES AS NEEDED
4. INSTALL TEMPORARY WOOD POLE, SEE TEMPORARY WOOD POLES SHEETS FOR DETAILS. EXACT LOCATION WILL BE DETERMINED BY THE ENGINEER
5. COVER EXISTING PEDESTRIAN PUSH BUTTON
6. INSTALL SIGN ON MAST ARM AS SHOWN
7. INSTALL R9-3 AND R9-3a SIGNS ON SIGNAL POLE AS SHOWN
8. INSTALL TWO TEMPORARY WOOD POLES AT 100′ MAXIMUM SPACING
9. INSTALL ONE TEMPORARY WOOD POLE AT 100′ MAXIMUM SPACING
10. INSTALL 1 SIC, 1#8 (G) IN 2"C (TYPE H) RISER
11. INSTALL 2 DLC, 1#8 (G) IN 2"C (TYPE H) RISER

(TR) - TAMPER RESISTANT COVER FOR PULL BOX

EXISTING POLE AND EQUIPMENT SCHEDULE

	STANDARD			Veh Sig Mtg		COUNTDOWN Ped SIGNAL Mtg	APS		LED Lum	IISNS		SPECIAL REQUIREMENTS
No.	TYPE	SMA	LMA	MAST ARM	POLE		Ø	ARROW				
Ⓐ	29-5-80	50′	12′	MAS MAS(N)	SV-1-T(N)	-	-	-	165 W	(60) WEST →	← WEST (60) FNBT	-
Ⓑ	15TS	-	12′	-	SV-2-TA	-	-	-	165 W	-		-
Ⓒ	26-3-80	40′	12′	MAS	SV-1-T	-	-	-	165 W	Grand Ave		-
Ⓓ	15TS	-	12′	-	SV-1-T(N)	-	-	-	165 W	-		-
Ⓔ	24-4-100	35′	12′	2-MAS	SV-1-T	SP-1-T	-	-	165 W	Old Brea Cyn →	← Old Brea Cyn FNBT	-
Ⓕ	1-A	-	-	-	TV-1-T	-	6(N)	→	-	-		-
Ⓖ	19-3-80	30′	12′	MAS	SV-1-T	-	6(N)	←	165 W	Grand Ave		-
Ⓗ	15TS	-	12′	-	SV-2-TA	SP-1-T	-	-	165 W	-		-

(N) = NEW

(MODIFY SIGNAL AND LIGHTING)
(NOTES, LEGEND, POLE, AND CONDUCTOR SCHEDULE)
(STAGE 1A)

MODIFYING EXISTING ELECTRICAL SYSTEM

E-23

STATE OF CALIFORNIA - DEPARTMENT OF TRANSPORTATION
Caltrans® DESIGN
CONSULTANT FUNCTIONAL SUPERVISOR: WILLIAM SUN
CALCULATED-DESIGNED BY: W. SUN
CHECKED BY: B. YAU
REVISED BY
DATE REVISED

LAST REVISION 00-00-00 | DATE PLOTTED => 09-MAY-2016 | TIME PLOTTED => 16:05

Dist	COUNTY	ROUTE	POST MILES TOTAL PROJECT	SHEET No.	TOTAL SHEETS
07	LA	60	R24.4/R25.3	226	384

REGISTERED CIVIL ENGINEER 1-15-16 DATE

3-14-16
PLANS APPROVAL DATE

REGISTERED PROFESSIONAL ENGINEER WILLIAM SUN No. 57664 Exp. 12/31/17 CIVIL STATE OF CALIFORNIA

THE STATE OF CALIFORNIA OR ITS OFFICERS OR AGENTS SHALL NOT BE RESPONSIBLE FOR THE ACCURACY OR COMPLETENESS OF SCANNED COPIES OF THIS PLAN SHEET.

LIN CONSULTING, INC.
21660 E. COPLEY DRIVE
#270
DIAMOND BAR, CA 91765

CITY OF INDUSTRY
15651 E. STAFFORD STREET
CITY OF INDUSTRY, CA 91744

NOTES: (THIS SHEET ONLY)

1. FOR NOTES AND SCHEDULES SEE SHEET MODIFY SIGNAL AND LIGHTING (NOTES, POLE AND CONDUCTOR SHCEDULE) (STAGE 1A).
2. FOR ACCURATE RIGHT OF WAY DATA, CONTACT RIGHT OF WAY ENGINEERING AT THE DISTRICT OFFICE.
3. FOR OVERHEAD LINE AND MESSENGER WIRE INSTALLATION, SEE TEMPORARY WOOD POLES SHEETS FOR DETAILS.

EXISTING PHASE DIAGRAM

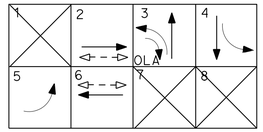

STAGE 1A PHASE DIAGRAM

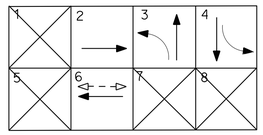

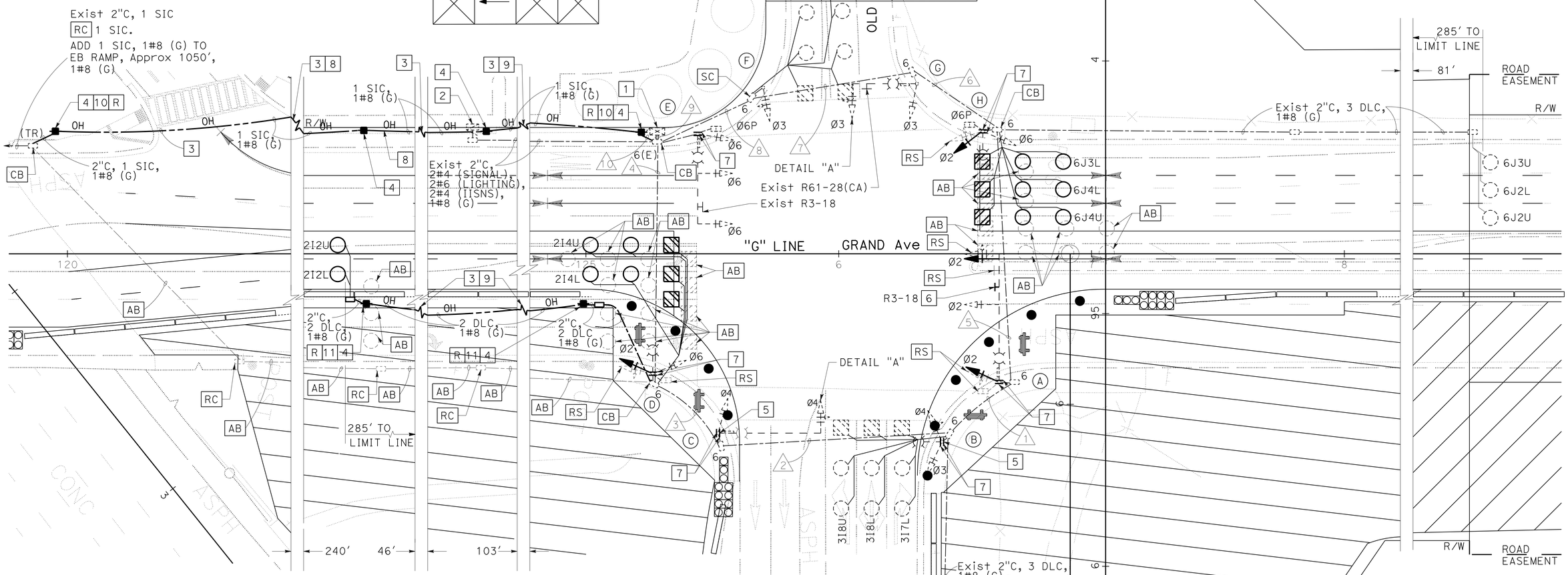

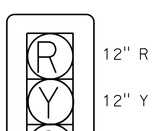

DETAIL "A"
NTS

(MODIFY SIGNAL AND LIGHTING)
(STAGE 1A)

APPROVED FOR ELECTRICAL WORK ONLY

MODIFYING EXISTING ELECTRICAL SYSTEM

SCALE: 1" = 20'

E-24

STATE OF CALIFORNIA - DEPARTMENT OF TRANSPORTATION
Caltrans®
DESIGN

CONSULTANT FUNCTIONAL SUPERVISOR: WILLIAM SUN
CALCULATED-DESIGNED BY: W. SUN
CHECKED BY: B. YAU
REVISED BY
DATE REVISED

LAST REVISION 00-00-00
DATE PLOTTED => 09-MAY-2016
TIME PLOTTED => 16:05

Dist	COUNTY	ROUTE	POST MILES TOTAL PROJECT	SHEET No.	TOTAL SHEETS
07	LA	60	R24.4/R25.3	227	384

REGISTERED CIVIL ENGINEER 1-15-16 DATE

3-14-16
PLANS APPROVAL DATE

REGISTERED PROFESSIONAL ENGINEER WILLIAM SUN No. 57664 Exp. 12/31/17 CIVIL STATE OF CALIFORNIA

THE STATE OF CALIFORNIA OR ITS OFFICERS OR AGENTS SHALL NOT BE RESPONSIBLE FOR THE ACCURACY OR COMPLETENESS OF SCANNED COPIES OF THIS PLAN SHEET.

LIN CONSULTING, INC.
21660 E. COPLEY DRIVE
#270
DIAMOND BAR, CA 91765

CITY OF INDUSTRY
15651 E. STAFFORD STREET
CITY OF INDUSTRY, CA 91744

CONDUIT AND CONDUCTOR SCHEDULE

CABLE SCHEDULE			CONDUIT RUN NUMBER										
CABLE TYPE	STD	PHASE	1	2	3	4	5	6	7	8	9	10	11
VEH-PED 12CSC	A	2		1		1	1			1	1	1	1
	B	3	1	1		1	1			1	1	1	1
	C	2							1	1	1	1	
	D	3,6								1	1	1	
	E	3					1			1	1	1	
	F	3,6				1	1			1	1	1	
PPB 3CSC		TOTAL	1	2		3	4		1	6	6	6	2
AWG		CIRCUIT											
#6		LIGHTING	2	2		2	2		2	2			2
#6		IISNS	2	2		2	2		2	2			2
#4		SERVICE										2(E)	
#8		GROUND	1	1	1	1	1	1	1	1	1(E)	1(E)	1
LOOP DLC													
PHASE 2								2	4	4	4	4	
PHASE 3			6	6		6	6			6	6	6	6
PHASE 6					3	6	6			6	6	6	
		TOTAL	6	6	3	12	12	2	4	16	16	16	6
SIGNAL INTERCONNECT											1(E)	1(E)	
CONDUIT SIZE			3"	OH	2"	OH	OH	2"	OH	OH	4"(E)	2-3"(E)	3"

(E) = EXISTING

LEGEND: (FOR SHEETS E-25 AND E-26)

1. EXISTING MODEL 2070L CONTROLLER ASSEMBLY AND MODEL 332 CONTROLLER CABINET WITH BBS
2. EXISTING 120/240 V TYPE III-CF SERVICE EQUIPMENT ENCLOSURE
   Ctid: 0753060R024450
   ADDRESS: 526 ½ GRAND Ave, DIAMOND BAR, CA
   METER No. 1: 100 A, 240 V, 2P CB (MAIN BREAKER)
   50 A, 120 V, 1P CB (SIGNAL)
   20 A, 120 V, 1P CB (PEC)
   40 A, 240 V, 2P CB (HWY SIGNS)
   20 A, 120 V, 1P CB (IISNS)
   Ctid: 0753060R024445M
   ADDRESS: 525 GRAND Ave, DIAMOND BAR, CA
   METER No. 2: 100 A, 240 V, 2P CB (MAIN BREAKER)
   40 A, 240 V, 2P CB (LIGHTING)
   20 A, 120 V, 1P CB (SAFETY LIGHTING)
   40 A, 120 V, 1P CB (RAMP METERING)
3. INSTALL OVERHEAD BUNDLE. SEE TEMPORARY WOOD POLES SHEETS FOR DETAILS
4. INSTALL TEMPORARY WOOD POLE, SEE TEMPORARY WOOD POLES SHEETS FOR DETAILS. EXACT LOCATION WILL BE DETERMINED BY THE ENGINEER
5. INSTALL OVERHEAD LINE WITH A MINIMUM OF 25 FEET CLEARANCE ABOVE ROADWAY SURFACE AND PROVIDE DEAD-END ASSEMBLIES AS NEEDED
6. INSTALL SIGN ON MAST ARM AS SHOWN
7. INSTALL SIGNAL HEAD ON MESSENGER WIRE AS SHOWN. SEE TEMPORARY WOOD POLE SHEETS FOR DETAILS
8. INSTALL ONE TEMPORARY WOOD POLE AT 100′ MAXIMUM SPACING
9. INSTALL SIGN ON MESSENGER WIRE AS SHOWN. SEE TEMPORARY WOOD POLES DETAIL No. 5 FOR SIGN MOUNTING DETAIL
10. INSTALL R9-3 AND R9-3a SIGNS ON POLE AS SHOWN
11. COIL 2-25′ TWISTED PAIRS FOR LOOPS 3I5U AND 3I10L FOR FUTURE USE. TAPE AND SEAL ENDS OF TWISTED PAIRS
12. INSTALL 2 DLC, 1#8 (G) IN 2"C (TYPE H) RISER

(TR) - TAMPER RESISTANT COVER FOR PULL BOX

POLE AND EQUIPMENT SCHEDULE

	STANDARD			Veh Sig Mtg		COUNTDOWN Ped SIGNAL Mtg	APS		LED Lum	IISNS	SPECIAL REQUIREMENTS
No.	TYPE	SMA	LMA	MAST ARM	POLE		Ø	ARROW			
A	61A-5-100	65′	15′	MAS	SV-1-T	-	-	-	235 W	← Grand Crossing Route 60 →	-
B	21TS	-	15′	-	SV-1-T	-	-	-	235 W	-	-
C	WOOD POLE	-	15′	-	SV-1-T	-	-	-	235 W	-	-
D	WOOD POLE(E)	-	15′	-	SV-2-TA	-	-	-	235 W	-	-
E	WOOD POLE	-	-	-	SV-1-T	-	-	-	-	-	-
F	WOOD POLE	-	15′	-	SV-2-TA	-	-	-	235 W	-	-

(E) = EXISTING

(MODIFY SIGNAL AND LIGHTING)
(NOTES, LEGEND, POLE AND CONDUCTOR SCHEDULE)
(STAGE 2A)

MODIFYING EXISTING ELECTRICAL SYSTEM

E-25

REVISED BY	DATE REVISED
B. YAU	W. SUN

CALCULATED-DESIGNED BY | CHECKED BY

CONSULTANT FUNCTIONAL SUPERVISOR: WILLIAM SUN

STATE OF CALIFORNIA - DEPARTMENT OF TRANSPORTATION
Caltrans
DESIGN

LAST REVISION 00-00-00 | DATE PLOTTED => 09-MAY-2016 | TIME PLOTTED => 16:05

Dist	COUNTY	ROUTE	POST MILES TOTAL PROJECT	SHEET No.	TOTAL SHEETS
07	LA	60	R24.4/R25.3	228	384

REGISTERED CIVIL ENGINEER 1-15-16 DATE

3-14-16
PLANS APPROVAL DATE

REGISTERED PROFESSIONAL ENGINEER WILLIAM SUN No. 57664 Exp. 12/31/17 CIVIL STATE OF CALIFORNIA

THE STATE OF CALIFORNIA OR ITS OFFICERS OR AGENTS SHALL NOT BE RESPONSIBLE FOR THE ACCURACY OR COMPLETENESS OF SCANNED COPIES OF THIS PLAN SHEET.

LIN CONSULTING, INC.
21660 E. COPLEY DRIVE
#270
DIAMOND BAR, CA 91765

CITY OF INDUSTRY
15651 E. STAFFORD STREET
CITY OF INDUSTRY, CA 91744

NOTES: (THIS SHEET ONLY)

1. FOR NOTES AND SCHEDULES SEE SHEET MODIFY SIGNAL AND LIGHTING (NOTES, POLE AND CONDUCTOR SCHEDULE)(STAGE 2A).
2. FOR ACCURATE RIGHT OF WAY DATA, CONTACT RIGHT OF WAY ENGINEERING AT THE DISTRICT OFFICE.
3. FOR OVERHEAD LINE AND MESSENGER WIRE INSTALLATION, SEE TEMPORARY WOOD POLES SHEETS FOR DETAILS.

EXISTING PHASE DIAGRAM

STAGE 2A PHASE DIAGRAM

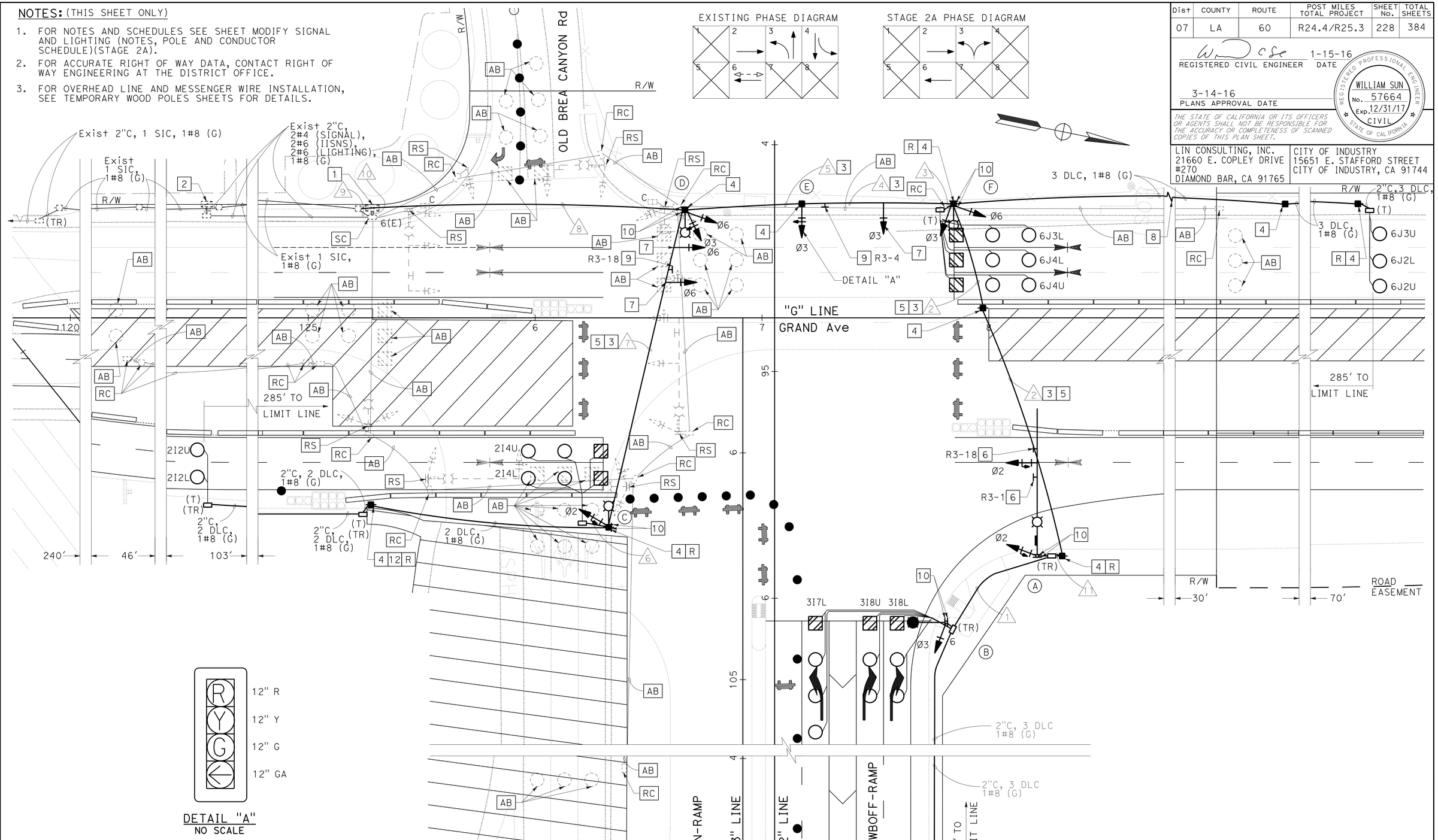

DETAIL "A"
NO SCALE

(MODIFY SIGNAL AND LIGHTING)
(STAGE 2A)

APPROVED FOR ELECTRICAL WORK ONLY

MODIFYING EXISTING ELECTRICAL SYSTEM

SCALE: 1" = 20'

E-26

STATE OF CALIFORNIA - DEPARTMENT OF TRANSPORTATION
Caltrans
DESIGN

CONSULTANT FUNCTIONAL SUPERVISOR: WILLIAM SUN
CALCULATED-DESIGNED BY: W. SUN
CHECKED BY: B. YAU
REVISED BY
DATE REVISED

LAST REVISION 00-00-00
DATE PLOTTED => 09-MAY-2016
TIME PLOTTED => 16:05

Dist	COUNTY	ROUTE	POST MILES TOTAL PROJECT	SHEET No.	TOTAL SHEETS
07	LA	60	R24.4/R25.3	229	384

REGISTERED CIVIL ENGINEER 1-15-16 DATE

3-14-16
PLANS APPROVAL DATE

REGISTERED PROFESSIONAL ENGINEER WILLIAM SUN No. 57664 Exp. 12/31/17 CIVIL STATE OF CALIFORNIA

THE STATE OF CALIFORNIA OR ITS OFFICERS OR AGENTS SHALL NOT BE RESPONSIBLE FOR THE ACCURACY OR COMPLETENESS OF SCANNED COPIES OF THIS PLAN SHEET.

LIN CONSULTING, INC.
21660 E. COPLEY DRIVE
#270
DIAMOND BAR, CA 91765

CITY OF INDUSTRY
15651 E. STAFFORD STREET
CITY OF INDUSTRY, CA 91744

CONDUIT AND CONDUCTOR SCHEDULE

CABLE SCHEDULE			CONDUIT RUN NUMBER																	
CABLE TYPE	STD	PHASE	1	2	3	4	5	6	7	8	9	10	11	12	13	14	15	16	17
VEH-PED 12CSC	A	2								1(E)		1(E)	1(E)	1(E)	1(E)	1(E)	1(E)	1(E)	
	B	3	1(E)							1(E)		1(E)	1(E)	1(E)	1(E)	1(E)	1(E)	1(E)	
	C																		
	D	2					1							1	1	1			1
	E	6												1(E)	1(E)	1(E)			
	F	6											1(E)	1(E)	1(E)	1(E)			
	G	3							1	1		1	1	1	1	1			
	H	3						1	1	1		1	1	1	1	1			
PPB 3CSC		TOTAL	1(E)				1	1	2	2+2(E)		2+2(E)	2+3(E)	3+4(E)	3+4(E)	3+4(E)	2(E)	2(E)	1
AWG		CIRCUIT																	
#6		LIGHTING	2(E)			2	2			2(E)		2(E)	2(E)	2(E)	2(E)		2(E)	2(E)	2
#6		IISNS								2(E)		2(E)	2(E)	2(E)	2(E)		2(E)	2(E)	
#4		SERVICE														2(E)			
#8		GROUND	1(E)	1	1	1	1	1	1	1(E)	1(E)	1(E)	1(E)	1(E)	1(E)	2(E)	1(E)	1(E)	1
LOOP DLC																			
PHASE 2							4							4(E)	4(E)	4(E)			4
PHASE 3			6(E)							6(E)		6(E)	6(E)	6(E)	6(E)	6(E)	6(E)	6(E)	
PHASE 6											3(E)	6(E)	6(E)	6(E)	6(E)	6(E)			
		TOTAL	6(E)				4			6(E)	3(E)	12(E)	12(E)	16(E)	16(E)	16(E)	6(E)	6(E)	4
SIGNAL INTERCONNECT															1(E)	1(E)			
CONDUIT SIZE			3"(E)	3",PT	4"	4"	OH	OH	OH	OH(E)	2"(E)	OH(E)	OH(E)	OH(E)	4"(E)	2-3"(E)	3"(E)	OH(E)	3"

(E) = EXISTING

LEGEND: (FOR SHEETS E-27 AND E-28)

1. EXISTING MODEL 2070L CONTROLLER ASSEMBLY AND MODEL 332 CONTROLLER CABINET WITH BBS TO REMAIN. INSTALL ONE ADDITIONAL AUXILLIARY OUTPUT FILE TO ACCOMMODATE A 3-COLOR OVERLAP OPERATION
2. EXISTING 120/240 V TYPE III-CF SERVICE EQUIPMENT ENCLOSURE
   Ctid: 0753060R024450
   ADDRESS: 526 ½ GRAND Ave, DIAMOND BAR, CA
   METER No. 1: 100 A, 240 V, 2P CB (MAIN BREAKER)
   50 A, 120 V, 1P CB (SIGNAL)
   20 A, 120 V, 1P CB (PEC)
   40 A, 240 V, 2P CB (HWY SIGNS)
   20 A, 120 V, 1P CB (IISNS)
   Ctid: 0753060R024445M
   ADDRESS: 525 GRAND Ave, DIAMOND BAR, CA
   METER No. 2: 100 A, 240 V, 2P CB (MAIN BREAKER)
   40 A, 240 V, 1P CB (LIGHTING)
   20 A, 120 V, 1P CB (SAFETY LIGHTING)
   40 A, 120 V, 1P CB (RAMP METERING)
3. INSTALL OVERHEAD BUNDLE. SEE TEMPORARY WOOD POLES SHEETS FOR DETAILS
4. INSTALL TEMPORARY WOOD POLE, SEE TEMPORARY WOOD POLES SHEETS FOR DETAILS. EXACT LOCATION MUST BE DETERMINED BY THE ENGINEER
5. INSTALL OVERHEAD LINE WITH A MINIMUM OF 25 FEET CLEARANCE ABOVE ROADWAY SURFACE AND PROVIDE DEAD-END ASSEMBLIES AS NEEDED
6. COIL 2-25' TWISTED PAIRS FOR LOOPS 3I7U AND 3I10L FOR FUTURE USE. TAPE AND SEAL ENDS OF TWISTED PAIRS
7. INSTALL SIGN ON MESSENGER WIRE AS SHOWN. SEE TEMPORARY WOOD POLES SHEETS FOR DETAILS
8. DISCONNECT DLC FOR 3I5L. TAPE AND SEAL ENDS OF DISCONNECTED DLC
9. INSTALL R9-3 AND R9-3a SIGNS ON POLE AS SHOWN
10. INSTALL SIGNAL HEAD ON MESSENGER WIRE AS SHOWN. SEE TEMPORARY WOOD POLE SHEETS FOR DETAILS
11. DISCONNECT DLC FOR 3I7L. TAPE AND SEAL ENDS OF DISCONNECTED DLC
12. EXISTING TWISTED PAIRS FOR LOOPS 3I5U AND 3I10U FOR FUTURE USE

(TR) - TAMPER RESISTANT COVER FOR PULL BOX

EXISTING POLE AND EQUIPMENT SCHEDULE

	STANDARD			Veh Sig Mtg		COUNTDOWN Ped SIGNAL Mtg	APS		LED Lum	IISNS	SPECIAL REQUIREMENTS
No.	TYPE	SMA	LMA	MAST ARM	POLE		Ø	ARROW			
A	61A-5-100	65'	15'	MAS	SV-1-T	-	-	-	235 W	← Grand Crossing Route 60 →	-
B	21TS	-	15'	-	SV-1-T(N)	-	-	-	235 W	-	-
C	29A-5-100(N)	-	15'(N)	-	-	-	-	-	235 W(N)	-	SIGNAL MAST ARM WILL BE INSTALLED IN FINAL STAGE
D	21TS(N)	-	15'(N)	-	SV-1-T(N)	-	-	-	235 W(N)	-	-
E	WOOD POLE	-	15'	-	SV-1-T(N)	-	-	-	235 W	-	-
F	WOOD POLE	-	15'	-	SV-1-T	-	-	-	235 W	-	-
G	WOOD POLE(N)	-	-	-	SV-1-T(N)	-	-	-	-	-	-
H	WOOD POLE(N)	-	-	-	SV-1-T(N)	-	-	-	-	-	-

(N) = NEW

MODIFYING EXISTING ELECTRICAL SYSTEM

(MODIFY SIGNAL AND LIGHTING)
(NOTES, LEGEND, POLE AND CONDUCTOR SCHEDULE)
(STAGE 2B)

E-27

STATE OF CALIFORNIA - DEPARTMENT OF TRANSPORTATION
DESIGN
CONSULTANT FUNCTIONAL SUPERVISOR: WILLIAM SUN
CALCULATED-DESIGNED BY: B. YAU
CHECKED BY: W. SUN
REVISED BY
DATE REVISED

LAST REVISION 00-00-00
DATE PLOTTED => 09-MAY-2016
TIME PLOTTED => 16:05

Dist	COUNTY	ROUTE	POST MILES TOTAL PROJECT	SHEET No.	TOTAL SHEETS
07	LA	60	R24.4/R25.3	230	384

REGISTERED CIVIL ENGINEER — DATE 1-15-16

3-14-16
PLANS APPROVAL DATE

REGISTERED PROFESSIONAL ENGINEER — WILLIAM SUN No. 57664 Exp. 12/31/17 CIVIL — STATE OF CALIFORNIA

THE STATE OF CALIFORNIA OR ITS OFFICERS OR AGENTS SHALL NOT BE RESPONSIBLE FOR THE ACCURACY OR COMPLETENESS OF SCANNED COPIES OF THIS PLAN SHEET.

LIN CONSULTING, INC.
21660 E. COPLEY DRIVE
#270
DIAMOND BAR, CA 91765

CITY OF INDUSTRY
15651 E. STAFFORD STREET
CITY OF INDUSTRY, CA 91744

NOTES: (THIS SHEET ONLY)

1. FOR NOTES AND SCHEDULES SEE SHEET MODIFY SIGNAL AND LIGHTING (NOTES, POLE AND CONDUCTOR SHCEDULE)(STAGE 2B).
2. FOR ACCURATE RIGHT OF WAY DATA, CONTACT RIGHT OF WAY ENGINEERING AT THE DISTRICT OFFICE.
3. FOR OVERHEAD LINE AND MESSENGER WIRE INSTALLATION, SEE TEMPORARY WOOD POLES SHEETS FOR DETAILS.

EXISTING PHASE DIAGRAM

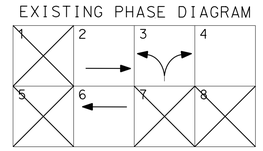

STAGE 2B PHASE DIAGRAM

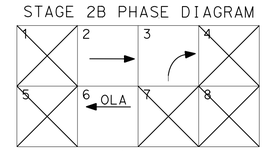

OLA = Ø3+Ø6 (CONTINUOUS GREEN)

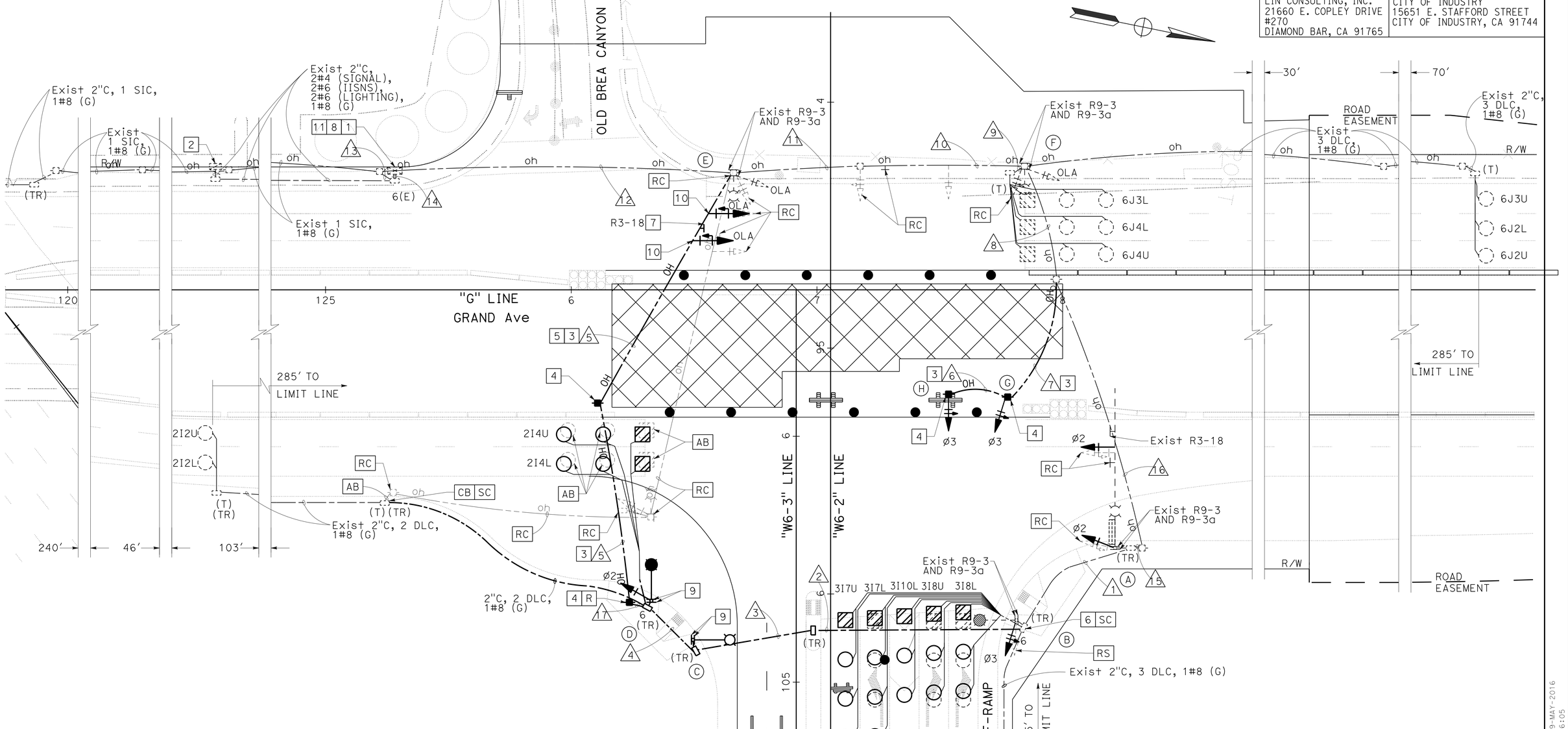

(MODIFY SIGNAL AND LIGHTING)
(STAGE 2B)

APPROVED FOR ELECTRICAL WORK ONLY

MODIFYING EXISTING ELECTRICAL SYSTEM

SCALE: 1" = 20'

E-28

STATE OF CALIFORNIA - DEPARTMENT OF TRANSPORTATION
Caltrans
DESIGN

CONSULTANT FUNCTIONAL SUPERVISOR: WILLIAM SUN
CALCULATED-DESIGNED BY: W. SUN
CHECKED BY:
REVISED BY: B. YAU
DATE REVISED:

LAST REVISION: 00-00-00
DATE PLOTTED => 09-MAY-2016
TIME PLOTTED => 16:05

Dist	COUNTY	ROUTE	POST MILES TOTAL PROJECT	SHEET No.	TOTAL SHEETS
07	LA	60	R24.4/R25.3	231	384

REGISTERED CIVIL ENGINEER 1-15-16 DATE

3-14-16
PLANS APPROVAL DATE

REGISTERED PROFESSIONAL ENGINEER WILLIAM SUN No. 57664 Exp. 12/31/17 CIVIL STATE OF CALIFORNIA

THE STATE OF CALIFORNIA OR ITS OFFICERS OR AGENTS SHALL NOT BE RESPONSIBLE FOR THE ACCURACY OR COMPLETENESS OF SCANNED COPIES OF THIS PLAN SHEET.

LIN CONSULTING, INC.
21660 E. COPLEY DRIVE
#270
DIAMOND BAR, CA 91765

CITY OF INDUSTRY
15651 E. STAFFORD STREET
CITY OF INDUSTRY, CA 91744

CONDUIT AND CONDUCTOR SCHEDULE

CABLE SCHEDULE			CONDUIT RUN NUMBER											
CABLE TYPE	STD	PHASE	1	2	3	4	5	6	7	8	9	10	11	12
VEH-PED 12CSC	A	2	1	1	1	1	1			1	1	1	1	1
	B	3		1	1	1	1			1	1	1	1	1
	C													
	D	2,2P					1			1	1	1	1	1
	E	3,6						1	1	1	1	1	1	
	F	3							1	1	1	1	1	
	G	3,6								1	1	1	1	
PPB 3CSC		TOTAL	2	2	2	2	3	1	2	6	6	6	6	3
AWG		CIRCUIT												
#6		LIGHTING	2(E)	2	2	2(E)	2	2	2	2	2(E)			2(E)
#4		SERVICE										2	2	
#8		GROUND	1(E)	1(E)	1(E)	1(E)	1	1	1	1	1	1(E)	2(E)	1(E)
LOOP DLC														
PHASE 2							4			4	4(E)	4(E)	4(E)	4(E)
PHASE 3				6	6	6	6			6	6(E)	6(E)	6(E)	6
PHASE 6								6	6	6	6	6	6	
		TOTAL		6	6	6	10	6	6	16	6+10(E)	6+10(E)	6+10(E)	
SIGNAL INTERCONNECT												1(E)	1(E)	
CONDUIT SIZE			3"(E)	3"(E)	3"(E)	3"(E)	OH	OH	OH	OH	OH	4"(E)	2-3"(E)	3"(E)

(E) = EXISTING

LEGEND: (FOR SHEETS E-29 AND E-30)

1. EXISTING MODEL 2070L CONTROLLER ASSEMBLY AND MODEL 332 CONTROLLER CABINET WITH BBS

2. SEE MODIFY RAMP METERING SYSTEM (STAGE 3A)(FINAL) FOR REMOVAL OF SERVICE EQUIPMENT ENCLOSURE

   Ctid: 0753060R024450
   ADDRESS: 526 ½ GRAND Ave, DIAMOND BAR, CA
   METER No. 1: 100 A, 240 V, 2P CB (MAIN BREAKER)
   50 A, 120 V, 1P CB (SIGNAL)
   20 A, 120 V, 1P CB (PEC)
   40 A, 240 V, 2P CB (HWY SIGNS)
   20 A, 120 V, 1P CB (IISNS)

   Ctid: 0753060R024445M
   ADDRESS: 525 GRAND Ave, DIAMOND BAR, CA
   METER No. 2: 100 A, 240 V, 2P CB (MAIN BREAKER)
   40 A, 240 V, 1P CB (LIGHTING)
   20 A, 120 V, 1P CB (SAFETY LIGHTING)
   40 A, 120 V, 1P CB (RAMP METERING)

3. INSTALL OVERHEAD BUNDLE. SEE TEMPORARY WOOD POLES SHEETS FOR DETAILS

4. INSTALL TEMPORARY WOOD POLE, SEE TEMPORARY WOOD POLES SHEETS FOR DETAILS. EXACT LOCATION MUST BE DETERMINED BY THE ENGINEER

5. INSTALL OVERHEAD LINE WITH A MINIMUM OF 25 FEET CLEARANCE ABOVE ROADWAY SURFACE AND PROVIDE DEAD-END ASSEMBLIES AS NEEDED

6. ADJUST EXISTING EQUIPMENT TO GRADE

7. SEE MODIFY RAMP METERING SYSTEM (STAGE 3A)(FINAL) FOR INSTALLATION OF SERVICE EQUIPMENT ENCLOSURE

   Ctid: 0753060R24441
   ADDRESS: 521 U GRAND Ave. DIAMOND BAR, CA
   METER No. 1: 100 A, 240 V, 2P CB (MAIN BREAKER)
   50 A, 120 V, 1P CB (SIGNAL)
   30 A, 120 V, 1P CB (SAFETY LIGHTING)
   15 A, 120 V, 1P CB (PEC)
   15 A, 120 V, 1P CB (IISNS)

   Ctid: 0753060R24443
   ADDRESS: 521 U1 GRAND Ave. DIAMOND BAR, CA
   METER No. 2: 100 A, 240 V, 2P CB (MAIN BREAKER)
   30 A, 240 V, 2P CB (LIGHTING)
   15 A, 120 V, 1P CB (LIGHTING CONTROL)
   30 A, 120 V, 1P CB (RAMP METERING)
   15 A, 120 V, 1P CB (IRRIGATION)

8. INSTALL SIGN ON MESSENGER WIRE AS SHOWN. SEE TEMPORARY WOOD POLES DETAIL No. 5 FOR SIGN MOUNTING DETAIL

9. INSTALL R9-3 AND R9-3A SIGNS ON POLE AS SHOWN

10. INSTALL SIGNAL HEAD ON MESSENGER WIRE AS SHOWN. SEE TEMPORARY WOOD POLE SHEETS FOR DETAILS

11. INSTALL ONE TEMPORARY WOOD POLE AT 100' MAXIMUM SPACING

(TR) - TAMPER RESISTANT COVER FOR PULL BOX

EXISTING POLE AND EQUIPMENT SCHEDULE

	STANDARD			Veh Sig Mtg		COUNTDOWN Ped SIGNAL Mtg	APS		LED Lum	IISNS	SPECIAL REQUIREMENTS
No.	TYPE	SMA	LMA	MAST ARM	POLE		Ø	ARROW			
A	61A-5-100	65'	15'	MAS	SV-1-T	-	-	-	235 W	← Grand Crossing Route 60 →	-
B	21TS	-	15'	-	SV-1-T	-	-	-	235 W	-	-
C	29A-5-100	-	15'	-	-	-	-	-	235 W	-	SIGNAL MAST ARM WILL BE INSTALLED IN FINAL STAGE
D	21TS	-	15'	-	SV-1-T	-	-	-	235 W	-	-
E	WOOD POLE(N)	-	15'(N)	-	SV-2-TA(N)	-	-	-	235 W(N)	-	-
F	WOOD POLE(N)	-	-	-	SV-1-T(N)	-	-	-	-	-	-
G	WOOD POLE(N)	-	15'(N)	-	SV-2-TA(N)	-	-	-	235 W(N)	-	-

(N) = NEW

MODIFYING EXISTING ELECTRICAL SYSTEM

(MODIFY SIGNAL AND LIGHTING)
(NOTES, LEGEND, POLE, AND CONDUCTOR SCHEDULE)
(STAGE 3A)

E-29

STATE OF CALIFORNIA - DEPARTMENT OF TRANSPORTATION
Caltrans®
DESIGN
CONSULTANT FUNCTIONAL SUPERVISOR: WILLIAM SUN
CALCULATED-DESIGNED BY: B. YAU
CHECKED BY: W. SUN
REVISED BY
DATE REVISED

LAST REVISION 00-00-00
DATE PLOTTED => 09-MAY-2016
TIME PLOTTED => 16:05

Dist	COUNTY	ROUTE	POST MILES TOTAL PROJECT	SHEET No.	TOTAL SHEETS
07	LA	60	R24.4/R25.3	232	384

REGISTERED CIVIL ENGINEER 1-15-16 DATE

3-14-16
PLANS APPROVAL DATE

REGISTERED PROFESSIONAL ENGINEER WILLIAM SUN No. 57664 Exp. 12/31/17 CIVIL STATE OF CALIFORNIA

THE STATE OF CALIFORNIA OR ITS OFFICERS OR AGENTS SHALL NOT BE RESPONSIBLE FOR THE ACCURACY OR COMPLETENESS OF SCANNED COPIES OF THIS PLAN SHEET.

LIN CONSULTING, INC.
21660 E. COPLEY DRIVE
#270
DIAMOND BAR, CA 91765

CITY OF INDUSTRY
15651 E. STAFFORD STREET
CITY OF INDUSTRY, CA 91744

NOTES: (THIS SHEET ONLY)

1. FOR NOTES AND SCHEDULES SEE SHEET MODIFY SIGNAL AND LIGHTING (NOTES, POLE AND CONDUCTOR SHCEDULE)(STAGE 3A).
2. FOR ACCURATE RIGHT OF WAY DATA, CONTACT RIGHT OF WAY ENGINEERING AT THE DISTRICT OFFICE.
3. FOR OVERHEAD LINE AND MESSENGER WIRE INSTALLATION, SEE TEMPORARY WOOD POLES SHEETS FOR DETAILS.

EXISTING PHASE DIAGRAM

OLA = Ø3+Ø6(CONTINUOUS GREEN)

STAGE 3A PHASE DIAGRAM

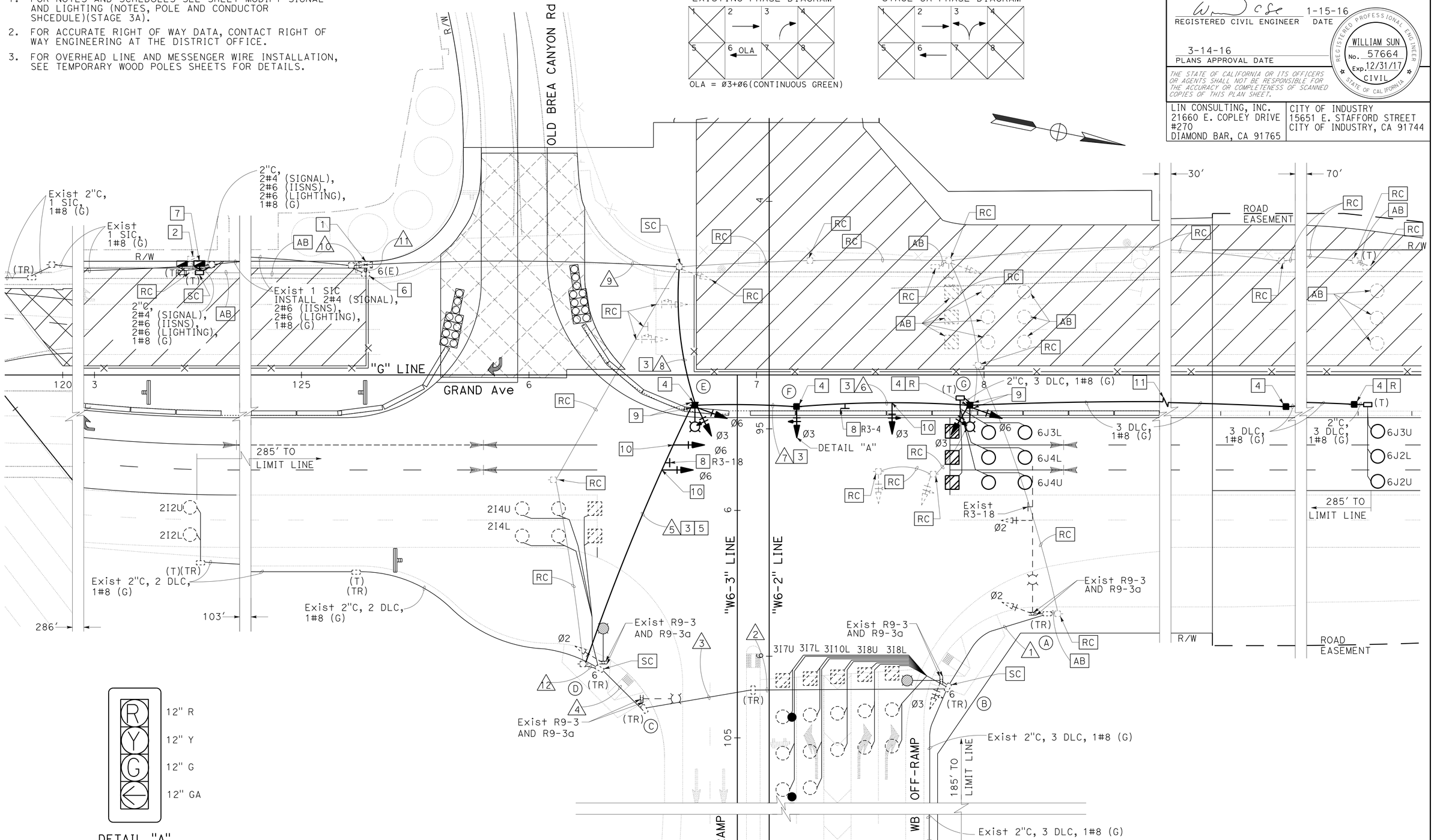

DETAIL "A"
NTS

(MODIFY SIGNAL AND LIGHTING)
(STAGE 3A)
APPROVED FOR ELECTRICAL WORK ONLY

MODIFYING EXISTING ELECTRICAL SYSTEM

SCALE: 1" = 20'

E-30

STATE OF CALIFORNIA - DEPARTMENT OF TRANSPORTATION
Caltrans
DESIGN
CONSULTANT FUNCTIONAL SUPERVISOR: WILLIAM SUN
CALCULATED-DESIGNED BY: B. YAU
CHECKED BY: W. SUN
REVISED BY
DATE REVISED

LAST REVISION 00-00-00
DATE PLOTTED => 09-MAY-2016
TIME PLOTTED => 16:05

Dist	COUNTY	ROUTE	POST MILES TOTAL PROJECT	SHEET No.	TOTAL SHEETS
07	LA	60	R24.4/R25.3	233	384

REGISTERED CIVIL ENGINEER 1-15-16 DATE

3-14-16
PLANS APPROVAL DATE

REGISTERED PROFESSIONAL ENGINEER WILLIAM SUN No. 57664 Exp. 12/31/17 CIVIL STATE OF CALIFORNIA

THE STATE OF CALIFORNIA OR ITS OFFICERS OR AGENTS SHALL NOT BE RESPONSIBLE FOR THE ACCURACY OR COMPLETENESS OF SCANNED COPIES OF THIS PLAN SHEET.

LIN CONSULTING, INC.
21660 E. COPLEY DRIVE
#270
DIAMOND BAR, CA 91765

CITY OF INDUSTRY
15651 E. STAFFORD STREET
CITY OF INDUSTRY, CA 91744

CONDUIT AND CONDUCTOR SCHEDULE

CABLE SCHEDULE			CONDUIT RUN NUMBER AND SIZE														
CABLE TYPE	STD	PHASE	1	2	3	4	5	6	7	8	9	10	11	12	13	14	15
VEH-PED 12CSC	A	2	1(E)		1(E)	1(E)	1(E)	1(E)	1			1	1	1	1	1	
	B	3,4			1(E)	1(E)	1(E)	1(E)	1			1	1	1	1	1	
	C	4		1	1	1	1	1	1			1	1	1	1	1	1
	D																
	E	2						1(E)	1			1	1	1	1	1	
	F	3,6							1			1	1	1	1		
	G	3,6								1		1	1	1	1		
PPB 3CSC		TOTAL	1(E)	1	2(E) +1	2(E) +1	2(E) +1	3(E) +1	5	2		7	7	7	7	4	1
AWG		CIRCUIT															
#6		LIGHTING	2(E)		2(E)	2(E)	2(E)	2(E)	2	2		2	2	2	2	2(E)	
#4		SERVICE												2(E)	2(E)		
#8		GROUND	1(E)	1	1(E)	1(E)	1(E)	1(E)	1	1	1	1	1	1(E)	2(E)	1(E)	1
LOOP DLC																	
PHASE 2								4(E)	4			4	4	4	4	4(E)	
PHASE 3					6(E)	6(E)	6(E)	6(E)	6			6	6	6	6	6(E)	
PHASE 4											2	2	2	2	2		
PHASE 6										6		6	6	6	6		
TOTAL					6(E)	6(E)	6(E)	10(E)	10	6	2	18	18	18	18	10(E)	
SIGNAL INTERCONNECT														1(E)	1(E)		
CONDUIT SIZE			3"(E)	OH	3"(E)	3"(E)	3"(E)	oh	OH	OH	2"	OH	OH	4"(E)	2-3"(E)	3"(E)	2"

(E) = EXISTING

LEGEND: (FOR SHEETS E-31 AND E-32)

1. EXISTING MODEL 2070L CONTROLLER ASSEMBLY AND MODEL 332 CONTROLLER CABINET WITH BBS
2. EXISTING 120/240 V TYPE III-CF SERVICE EQUIPMENT ENCLOSURE
   CTID: 0753060R24441
   ADDRESS: 521 U GRAND Ave, DIAMOND BAR, CA
   METER No. 1: 100 A, 240 V, 2P CB (MAIN BREAKER)
   50 A, 120 V, 1P CB (SIGNAL)
   30 A, 120 V, 1P CB (SAFETY LIGHTING)
   15 A, 120 V, 1P CB (PEC)
   15 A, 120 V, 1P CB (IISNS)
   CTID: 0753060R24443
   ADDRESS: 521 U1 GRAND Ave, DIAMOND BAR, CA
   METER No. 2: 100 A, 240 V, 2P CB (MAIN BREAKER)
   30 A, 240 V, 2P CB (LIGHTING)
   15 A, 120 V, 1P CB (LIGHTING CONTROL)
   30 A, 120 V, 1P CB (RAMP METERING)
   15 A, 120 V, 1P CB (IRRIGATION)
3. INSTALL OVERHEAD BUNDLE. SEE TEMPORARY WOOD POLES SHEETS FOR DETAILS
4. INSTALL TEMPORARY WOOD POLE, SEE TEMPORARY WOOD POLES SHEETS FOR DETAILS. EXACT LOCATION MUST BE DETERMINED BY THE ENGINEER
5. INSTALL OVERHEAD LINE WITH A MINIMUM OF 25 FEET CLEARANCE ABOVE ROADWAY SURFACE AND PROVIDE DEAD-END ASSEMBLIES AS NEEDED
6. INSTALL SIGN ON MESSENGER WIRE AS SHOWN. SEE TEMPORARY WOOD POLES SHEETS FOR DETAILS
7. INSTALL SIGNAL HEAD ON MESSENGER WIRE AS SHOWN. SEE TEMPORARY WOOD POLE SHEETS FOR DETAILS

(TR) - TAMPER RESISTANT COVER FOR PULL BOX

EXISTING POLE AND EQUIPMENT SCHEDULE

	STANDARD			Veh Sig Mtg		COUNTDOWN Ped SIGNAL Mtg	APS		LED Lum	IISNS	SPECIAL REQUIREMENTS
No.	TYPE	SMA	LMA	MAST ARM	POLE		Ø	ARROW			
A	61A-5-100	65′	15′	MAS	SV-1-T	-	-	-	235 W	← Grand Crossing Route 60 →	-
B	21TS	-	15′	-	SV-1-T(N) SV-1-T	-	-	-	235 W	-	-
C	WOOD POLE(N)	-		-	SV-1-T(N)	-	-	-	-	-	-
D	29A-5-100	-	15′	-	-	-	-	-	235 W	-	SIGNAL MAST ARM WILL BE INSTALLED IN FINAL STAGE
E	21TS	-	15′	-	SV-1-T	-	-	-	235 W	-	-
F	WOOD POLE	-	15′	-	SV-2-TA	-	-	-	235 W	-	-
G	WOOD POLE	-	15′	-	SV-2-TA	-	-	-	235 W	-	-

(N) = NEW

(MODIFY SIGNAL AND LIGHTING)
(NOTES, LEGEND, POLE AND CONDUCTOR SCHEDULE)
(STAGE 3B)

MODIFYING EXISTING ELECTRICAL SYSTEM

E-31

STATE OF CALIFORNIA - DEPARTMENT OF TRANSPORTATION
Caltrans DESIGN
CONSULTANT FUNCTIONAL SUPERVISOR: WILLIAM SUN
CALCULATED-DESIGNED BY: B. YAU
CHECKED BY: W. SUN
REVISED BY
DATE REVISED

LAST REVISION 00-00-00
DATE PLOTTED => 09-MAY-2016
TIME PLOTTED => 16:05

Dist	COUNTY	ROUTE	POST MILES TOTAL PROJECT	SHEET No.	TOTAL SHEETS
07	LA	60	R24.4/R25.3	234	384

REGISTERED CIVIL ENGINEER — DATE 1-15-16

3-14-16
PLANS APPROVAL DATE

REGISTERED PROFESSIONAL ENGINEER — WILLIAM SUN — No. 57664 — Exp. 12/31/17 — CIVIL — STATE OF CALIFORNIA

THE STATE OF CALIFORNIA OR ITS OFFICERS OR AGENTS SHALL NOT BE RESPONSIBLE FOR THE ACCURACY OR COMPLETENESS OF SCANNED COPIES OF THIS PLAN SHEET.

LIN CONSULTING, INC.
21660 E. COPLEY DRIVE
#270
DIAMOND BAR, CA 91765

CITY OF INDUSTRY
15651 E. STAFFORD STREET
CITY OF INDUSTRY, CA 91744

NOTES: (THIS SHEET ONLY)

1. FOR NOTES AND SCHEDULES SEE SHEET MODIFY SIGNAL AND LIGHTING (NOTES, POLE AND CONDUCTOR SHCEDULE)(STAGE 3B).
2. FOR ACCURATE RIGHT OF WAY DATA, CONTACT RIGHT OF WAY ENGINEERING AT THE DISTRICT OFFICE.
3. FOR OVERHEAD LINE AND MESSENGER WIRE INSTALLATION, SEE TEMPORARY WOOD POLES SHEETS FOR DETAILS.

EXISTING PHASE DIAGRAM

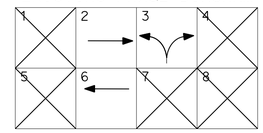

STAGE 3B PHASE DIAGRAM

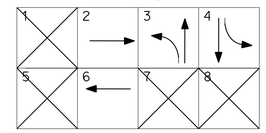

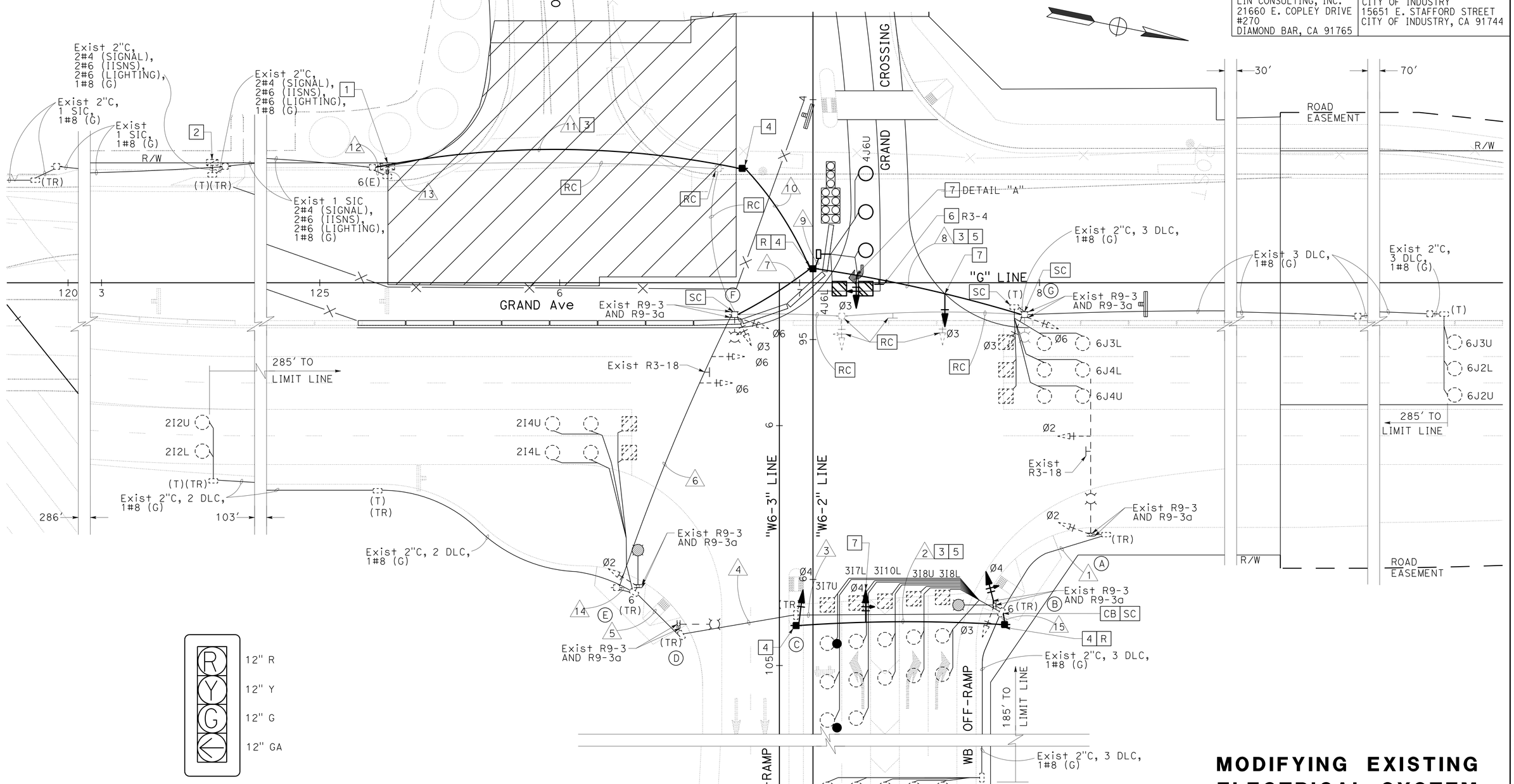

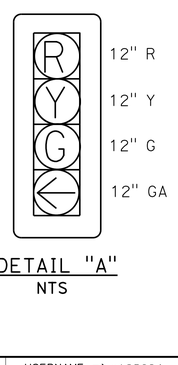

DETAIL "A"
NTS

(MODIFY SIGNAL AND LIGHTING)
(STAGE 3B)
APPROVED FOR ELECTRICAL WORK ONLY

MODIFYING EXISTING ELECTRICAL SYSTEM

SCALE: 1" = 20'

E-32

STATE OF CALIFORNIA - DEPARTMENT OF TRANSPORTATION
Caltrans® DESIGN
CONSULTANT FUNCTIONAL SUPERVISOR: WILLIAM SUN
CALCULATED-DESIGNED BY: B. YAU
CHECKED BY: W. SUN
REVISED BY
DATE REVISED

LAST REVISION DATE PLOTTED => 11-MAY-2016
00-00-00 TIME PLOTTED => 08:37

Dist	COUNTY	ROUTE	POST MILES TOTAL PROJECT	SHEET No.	TOTAL SHEETS
07	LA	60	R24.4/R25.3	235	384

REGISTERED CIVIL ENGINEER 1-15-16 DATE

3-14-16
PLANS APPROVAL DATE

REGISTERED PROFESSIONAL ENGINEER WILLIAM SUN No. 57664 Exp. 12/31/17 CIVIL STATE OF CALIFORNIA

THE STATE OF CALIFORNIA OR ITS OFFICERS OR AGENTS SHALL NOT BE RESPONSIBLE FOR THE ACCURACY OR COMPLETENESS OF SCANNED COPIES OF THIS PLAN SHEET.

LIN CONSULTING, INC.
21660 E. COPLEY DRIVE
#270
DIAMOND BAR, CA 91765

CITY OF INDUSTRY
15651 E. STAFFORD STREET
CITY OF INDUSTRY, CA 91744

CONDUIT AND CONDUCTOR SCHEDULE

CABLE SCHEDULE		CONDUIT RUN NUMBER AND SIZE												
AWG OR CABLE	CIRUIT	1	2	3	4	5	6	7	8	9	10	11	12	13
28CSC	Veh/ped SIGNAL Ped PUSH BUTTON	1	1	1	1	1	1	1	1	1	1	1	1	2
#6	LIGHTING	2(E)	2(E)	2(E)	2(E)	2(E)	2	2	2	2	2	2	2	
#6	IISNS	2	2	2	2	2	2	2	2			2	2	
#4	SERVICE													2
#8	GROUND	1(E)	1(E)	1(E)	1(E)	1(E)	1	1	1	1	1	1	1	2
LOOP DLC														
PHASE 2							8	8						8
PHASE 3				10	10	10	10	10						10
PHASE 4													5	5
PHASE 5							1	1						1
PHASE 6									8	8	8	8	8	8
	TOTAL			10	10	10	19	19	8	8	8	8	13	32
CONDUIT SIZE		2"(E)	2"(E)	3"(E)	3"(E)	4"(E)	4"	4"	4"	4"	4"	4"	4"	2-4"

(E) = EXISTING

LEGEND: (FOR SHEETS E-33 AND E-34)

1. INSTALL DEPARTMENT-FURNISHED MODEL 2070L CONTROLLER ASSEMBLY IN MODEL 332 CONTROLLER CABINET WITH MODEL 2070-6B MODEM. INSTALL WIRELESS DATA SERVICE SYSTEM. INSTALL BBS BATTERIES AND EXTERNAL CABINET. INSTALL DEPARTMENT-FURNISHED BBS COMPONENTS
2. EXISTING 120/240 V TYPE III-CF SERVICE EQUIPMENT ENCLOSURE

   Ctid: 0753060R24441
   ADDRESS: 521 U GRAND Ave, DIAMOND BAR, CA
   METER No. 1: 100 A, 240 V, 2P CB (MAIN BREAKER)
   50 A, 120 V, 1P CB (SIGNAL)
   30 A, 120 V, 1P CB (SAFETY LIGHTING)
   15 A, 120 V, 1P CB (PEC)
   15 A, 120 V, 1P CB (IISNS)

   Ctid: 0753060R24443
   ADDRESS: 521 U1 GRAND Ave, DIAMOND BAR, CA
   METER No. 2: 100 A, 240 V, 2P CB (MAIN BREAKER)
   30 A, 240 V, 2P CB (LIGHTING)
   15 A, 120 V, 1P CB (LIGHTING CONTROL)
   30 A, 120 V, 1P CB (RAMP METERING)
   15 A, 120 V, 1P CB (IRRIGATION)
3. INSTALL SIGN ON SIGNAL MAST ARM AS SHOWN
4. INSTALL R9-3 AND R9-3a SIGNS ON SIGNAL POLE AS SHOWN
5. INSTALL TYPE 1 PEDESTRIAN BARRICADE WITH R49(CA) SIGN

(TR) - TAMPER RESISTANT COVER FOR PULL BOX

POLE AND EQUIPMENT SCHEDULE

	STANDARD			Veh Sig Mtg		COUNTDOWN Ped SIGNAL Mtg	APS		LED Lum	IISNS	SPECIAL REQUIREMENTS
No.	TYPE	SMA	LMA	MAST ARM	POLE		ø	ARROW			
A	61A-5-100(E)	65'(E)	15'(E)	MAT MAS	SV-1-T	-	-	-	235 W(E)	← Grand Crossing Route 60 →	-
B	21TS(E)	-	15'(E)	-	SV-1-T(E) SV-1-T(E)	-	-	-	235 W(E)	-	-
C	29A-5-100(E)	50'	15'(E)	MAT MAS	SV-1-T	-	-	-	235 W(E)	Grand Ave	-
D	21TS(E)	-	15'(E)	-	SV-1-T	-	-	-	235 W(E)	-	-
E	26A-4-100	40'	15'	2 MAS	SV-1-T	SP-1-T	-	-	235 W	Grand Crossing → ← Route 60	-
F	21TS	-	15'	-	SV-2-TA	-	-	-	235 W	-	-
G	PBA POST	-	-	-	-	-	6	←→	-	-	-
H	19A-4-100	30'	15'	MAT MAS	SV-1-T	-	-	-	235 W	Grand Ave	-
I	61A-5-100	65'	15'	MAT	SV-2-TA	SP-1-T	-	-	235 W	-	-
J	PBA POST	-	-	-	-	-	6	←	-	-	-
K	PBA POST	-	-	-	-	-	6	→	-	-	-

(E) = EXISTING

(MODIFY SIGNAL AND LIGHTING)
(NOTES, LEGEND, POLE AND CONDUCTOR SCHEDULE)
(FINAL)

MODIFYING EXISTING ELECTRICAL SYSTEM

E-33

STATE OF CALIFORNIA - DEPARTMENT OF TRANSPORTATION
Caltrans DESIGN
CONSULTANT FUNCTIONAL SUPERVISOR WILLIAM SUN
CALCULATED-DESIGNED BY B. YAU
CHECKED BY W. SUN
REVISED BY
DATE REVISED

LAST REVISION 00-00-00
DATE PLOTTED => 09-MAY-2016
TIME PLOTTED => 16:05

Dist	COUNTY	ROUTE	POST MILES TOTAL PROJECT	SHEET No.	TOTAL SHEETS
07	LA	60	R24.4/R25.3	236	384

REGISTERED CIVIL ENGINEER — DATE 1-15-16

3-14-16
PLANS APPROVAL DATE

REGISTERED PROFESSIONAL ENGINEER — WILLIAM SUN No. 57664 Exp. 12/31/17 CIVIL — STATE OF CALIFORNIA

THE STATE OF CALIFORNIA OR ITS OFFICERS OR AGENTS SHALL NOT BE RESPONSIBLE FOR THE ACCURACY OR COMPLETENESS OF SCANNED COPIES OF THIS PLAN SHEET.

LIN CONSULTING, INC.
21660 E. COPLEY DRIVE
#270
DIAMOND BAR, CA 91765

CITY OF INDUSTRY
15651 E. STAFFORD STREET
CITY OF INDUSTRY, CA 91744

NOTES: (THIS SHEET ONLY)

1. FOR NOTES AND SCHEDULES SEE SHEET MODIFY SIGNAL AND LIGHTING (NOTES, POLE AND CONDUCTOR SHCEDULE).
2. FOR ACCURATE RIGHT OF WAY DATA, CONTACT RIGHT OF WAY ENGINEERING AT THE DISTRICT OFFICE.

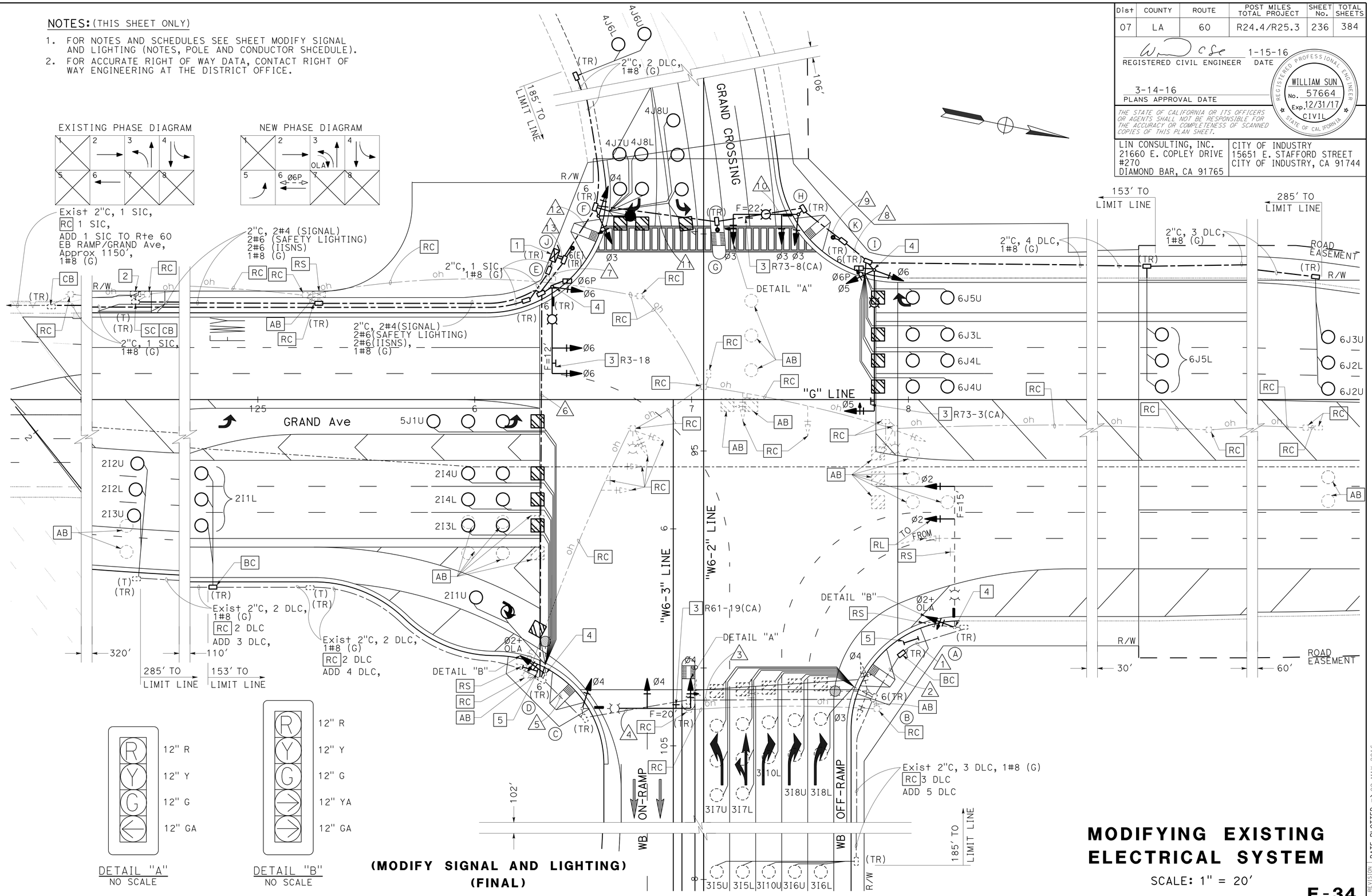

(MODIFY SIGNAL AND LIGHTING)
(FINAL)

APPROVED FOR ELECTRICAL WORK ONLY

MODIFYING EXISTING ELECTRICAL SYSTEM

SCALE: 1" = 20'

E-34

STATE OF CALIFORNIA - DEPARTMENT OF TRANSPORTATION
Caltrans® DESIGN
CONSULTANT FUNCTIONAL SUPERVISOR: WILLIAM SUN
CALCULATED-DESIGNED BY: B. YAU
CHECKED BY: W. SUN
REVISED BY
DATE REVISED

LAST REVISION 00-00-00
DATE PLOTTED => 09-MAY-2016
TIME PLOTTED => 16:05

Dist	COUNTY	ROUTE	POST MILES TOTAL PROJECT	SHEET No.	TOTAL SHEETS
07	LA	60	R24.4/R25.3	237	384

REGISTERED CIVIL ENGINEER 1-15-16 DATE

3-14-16
PLANS APPROVAL DATE

REGISTERED PROFESSIONAL ENGINEER
WILLIAM SUN
No. 57664
Exp. 12/31/17
CIVIL
STATE OF CALIFORNIA

THE STATE OF CALIFORNIA OR ITS OFFICERS OR AGENTS SHALL NOT BE RESPONSIBLE FOR THE ACCURACY OR COMPLETENESS OF SCANNED COPIES OF THIS PLAN SHEET.

LIN CONSULTING, INC.
21660 E. COPLEY DRIVE
#270
DIAMOND BAR, CA 91765

CITY OF INDUSTRY
15651 E. STAFFORD STREET
CITY OF INDUSTRY, CA 91744

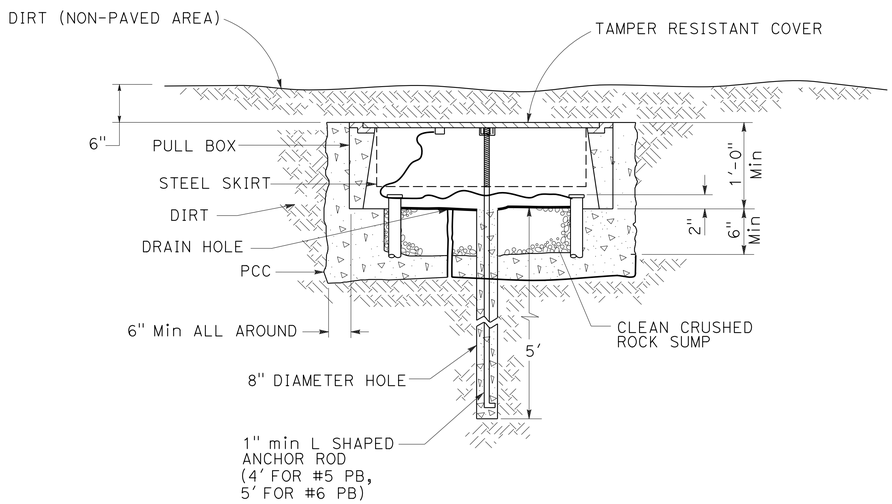

PULL BOX INSTALLATION DETAILS (NON-PAVED AREAS)

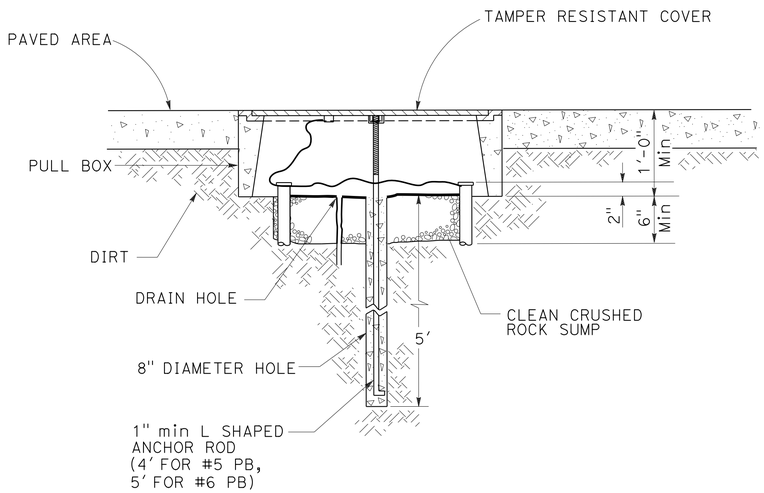

PULL BOX INSTALLATION DETAILS (PAVED AREAS)

ELECTRICAL DETAILS
(TAMPER RESISTANT PULL BOX INSTALLATION DETAILS)

NO SCALE

E-35

STATE OF CALIFORNIA - DEPARTMENT OF TRANSPORTATION
Caltrans® DESIGN

CONSULTANT FUNCTIONAL SUPERVISOR: WILLIAM SUN
CALCULATED-DESIGNED BY: B. YAU
CHECKED BY: W. SUN
REVISED BY
DATE REVISED

LAST REVISION 00-00-00
DATE PLOTTED => 09-MAY-2016
TIME PLOTTED => 16:05

Dist	COUNTY	ROUTE	POST MILES TOTAL PROJECT	SHEET No.	TOTAL SHEETS
07	LA	60	R24.4/R25.3	238	384

REGISTERED CIVIL ENGINEER 1-15-16 DATE

3-14-16
PLANS APPROVAL DATE

REGISTERED PROFESSIONAL ENGINEER WILLIAM SUN No. 57664 Exp. 12/31/17 CIVIL STATE OF CALIFORNIA

THE STATE OF CALIFORNIA OR ITS OFFICERS OR AGENTS SHALL NOT BE RESPONSIBLE FOR THE ACCURACY OR COMPLETENESS OF SCANNED COPIES OF THIS PLAN SHEET.

LIN CONSULTING, INC.
21660 E. COPLEY DRIVE
#270
DIAMOND BAR, CA 91765

CITY OF INDUSTRY
15651 E. STAFFORD STREET
CITY OF INDUSTRY, CA 91744

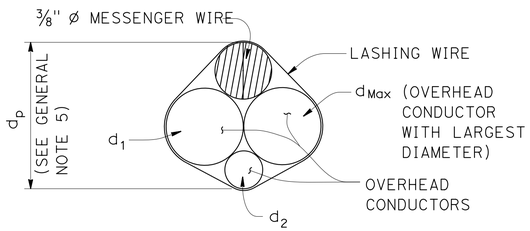

$d_p = 3/8'' + d_{Max} + 0.30 * (d_1 + d_2 + \ldots d_n)$

PROJECTED DEPTH OF OVERHEAD BUNDLE, (d_p)

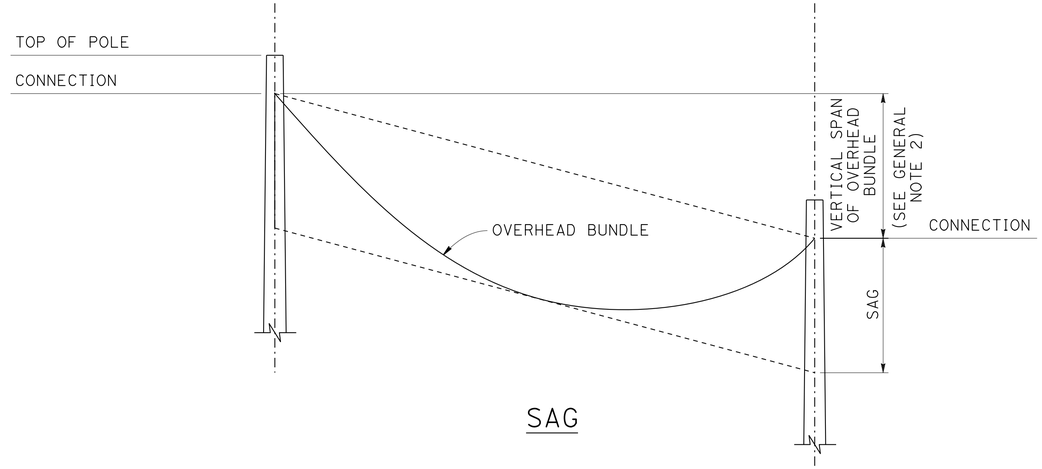

SAG

DESIGN: AASHTO STANDARD SPECIFICATIONS FOR STRUCTURAL SUPPORTS FOR HIGHWAY SIGNS, LUMINAIRES AND TRAFFIC SIGNALS, FIFTH EDITION (LTS-5)

GROUP LOAD COMBINATIONS:

I DEAD LOAD
II DEAD LOAD + WIND LOAD
III DEAD LOAD + 0.5 (WIND LOAD) + ICE LOAD
IV FATIGUE: NOT USED

LOADING:

WIND LOADING: 100 MPH (3-SECOND GUST)
WIND RECURRENCE: 10 YEARS
COMBINED HEIGHT, EXPOSURE, AND ELEVATED TERRAIN FACTOR = 1.05 (EXPOSURE C, STRUCTURE IS NOT LOCATED ON OR OVER THE TOP HALF OF A RIDGE, HILL, OR ESCARPMENT)

ICE LOADING: 3.0 PSF ON SURFACES, 0.60 IN RADIAL THICKNESS OF ICE AT A UNIT WEIGHT OF 60 PCF ON OVERHEAD BUNDLES

BASIC DESIGN VALUES:

TIMBER POLES: Fb = 1850 PSI
Fv = 110 PSI
Fcp = 230 PSI
Fc = 950 PSI
E = 1500 X 10^3 PSI

DESIGN WIRE BREAKING STRENGTHS:

ASTM A475, UTILITIES GRADE, 7 STRAND MODIFIED BY TERMINATION EFFICIENCY FACTOR OF 0.8

FOUNDATION DESIGN NOTES:

1. POLE EMBEDMENT DEPTH DESIGN IS BASED ON BROMS' APPROXIMATE PROCEDURE AS DESCRIBED IN ARTICLE 13.6 OF AASHTO LTS-5.
2. EMBEDMENT DEPTH IS CALCULATED BASED ON FOLLOWING SOIL PARAMETERS,
   COHESIVE SOIL:
   SHEAR STRENGTH OF SOIL C = 1500 PSF.
   COHESIONLESS SOIL:
   Ø = 30 Deg, γ = 120 PCF.
   SOIL ASSUMED TO BE UNSATURATED.
3. AN OVERLOAD FACTOR OF 2.0 AND AN UNDERCAPACITY FACTOR OF 0.7 WERE USED FOR SAFETY FACTOR OF 2.86.
4. ALLOWABLE VERTICAL BEARING PRESSURE AT THE END BEARING OF POLES IS 3000 PSF AT 6 FEET OR MORE EMBEDMENT.

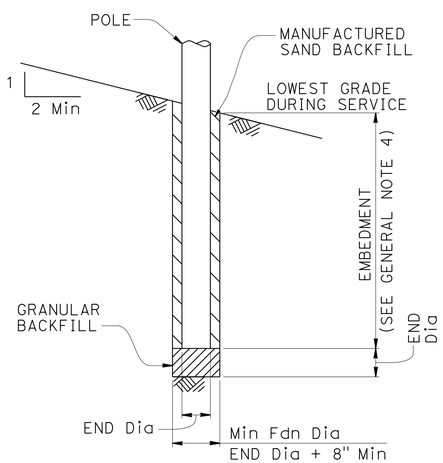

POLE FOUNDATION

GENERAL NOTES:

1. THE MESSENGER WIRE AND ANY COMBINATION OF OVERHEAD CONDUCTORS MUST NOT EXCEED EITHER A SELF WEIGHT OF 3.0 Lb/Ft OR THE MAXIMUM d_p.
2. THE MAXIMUM VERTICAL SPAN IS 10% OF THE HORIZONTAL SPAN.
3. FOR POLES WITH ADJACENT UNBALANCED HORIZONTAL SPANS, THE SHORTEST HORIZONTAL SPAN MUST BE AT LEAST 50% OF THE LARGEST HORIZONTAL SPAN.
4. ADD 2'-0" FOR SLOPES ABOVE 1V:4H.
5. FOR A POLE SUPPORTING MULTIPLE SPANS, CALCULATE d_p FOR EACH SPAN AND USE THE LARGEST VALUE.
6. DO NOT EXCEED THE ATTACHMENTS SHOWN.

DIAMETERS AND SELF WEIGHT OF OVERHEAD CONDUCTORS

CONDUCTOR OR CABLE TYPE	DIAMETER d (in)	WEIGHT w (p/f)
3 CONDUCTOR SIGNAL CABLE (3CSC)	0.400	0.0980
5 CONDUCTOR SIGNAL CABLE (5CSC)	0.500	0.1560
9 CONDUCTOR SIGNAL CABLE (9CSC)	0.650	0.2760
12 CONDUCTOR SIGNAL CABLE (12CSC)	0.800	0.3970
28 CONDUCTOR SIGNAL CABLE (28CSC)	0.900	0.6490
1-#14	0.166	0.0235
1-#12	0.185	0.0330
1-#10	0.210	0.0476
1-#8	0.271	0.0774
1-#6	0.310	0.1130
1-#4	0.359	0.1690
1-#3	0.388	0.2080
1-#2	0.420	0.2560
1-#1	0.498	0.3340
6-CONDUCTOR SIGNAL INTERCONNECT CABLE (SIC)	0.350	0.0860
12-CONDUCTOR SIGNAL INTERCONNECT CABLE (SIC)	0.500	0.1440
DETECTOR LEAD-IN CABLE (DLC)	0.310	0.0440
12 to 48-STRAND FIBER OPTIC CABLE (48FOC)	0.424	0.0600
72-STRAND FIBER OPTIC CABLE (72FOC)	0.484	0.0770
96-STRAND FIBER OPTIC CABLE (96FOC)	0.535	0.1050
144-STRAND FIBER OPTIC CABLE (144FOC)	0.670	0.1890
3/8" Ø MESSENGER WIRE	0.375	0.2730

TEMPORARY WOOD POLES
GENERAL NOTES

NO SCALE

E-36

REVISED BY | DATE REVISED
B. YAU | W. SUN
CALCULATED-DESIGNED BY | CHECKED BY
CONSULTANT FUNCTIONAL SUPERVISOR: WILLIAM SUN
STATE OF CALIFORNIA - DEPARTMENT OF TRANSPORTATION
Caltrans
DESIGN

LAST REVISION 00-00-00 | DATE PLOTTED => 09-MAY-2016 | TIME PLOTTED => 16:05

Dist	COUNTY	ROUTE	POST MILES TOTAL PROJECT	SHEET No.	TOTAL SHEETS
07	LA	60	R24.4/R25.3	239	384

REGISTERED CIVIL ENGINEER 1-15-16 DATE

3-14-16
PLANS APPROVAL DATE

REGISTERED PROFESSIONAL ENGINEER WILLIAM SUN No. 57664 Exp. 12/31/17 CIVIL STATE OF CALIFORNIA

THE STATE OF CALIFORNIA OR ITS OFFICERS OR AGENTS SHALL NOT BE RESPONSIBLE FOR THE ACCURACY OR COMPLETENESS OF SCANNED COPIES OF THIS PLAN SHEET.

LIN CONSULTING, INC.
21660 E. COPLEY DRIVE
#270
DIAMOND BAR, CA 91765

CITY OF INDUSTRY
15651 E. STAFFORD STREET
CITY OF INDUSTRY, CA 91744

LEGEND:

- WOOD POLE NO ATTACHMENTS
- A — WOOD POLE WITH ATTACHMENTS
- —OH— OVERHEAD BUNDLE

POLE SELECTION TABLE

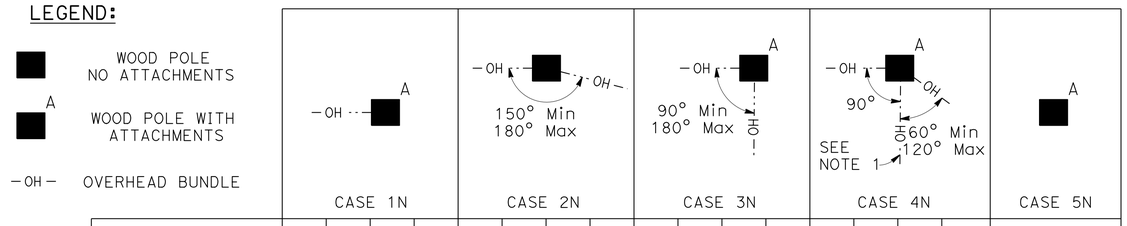

			CASE 1N				CASE 2N				CASE 3N				CASE 4N				CASE 5N
		MAXIMUM d_p	1"	1.5"	2.0"	2.5"	1"	1.5"	2.0"	2.5"	1.0"	1.5"	2.0"	2.5"	1"	1.5"	2.0"	2.5"	N/A
OVERHEAD BUNDLE HORIZONTAL SPAN (Max)	50'	MINIMUM POLE CLASS	H-1	H-2	H-2	H-2	4	3	2	1	H-2	H-2	H-3	H-3	H-4	H-4	H-4	H-5	CLASS 1 E = 10'
		POLE EMBEDMENT (E)	11'				10'				11'				12'				
	100'	MINIMUM POLE CLASS	H-2	H-3	H-4	H-5	1	H-1	H-2	H-3	H-4	H-5	H-5	H-6	H-5	H-5	H-6		
		POLE EMBEDMENT (E)	12'				11'				12'				12'				
	150'	MINIMUM POLE CLASS	H-4	H-5	H-6		H-1	H-2	H-3	H-5	H-6				H-6				
		POLE EMBEDMENT (E)	12'				12'				12'				12'				
	200'	MINIMUM POLE CLASS	H-5	H-6			H-2	H-3	H-5										
		POLE EMBEDMENT (E)	12'				12'												

1. CCTV CAMERA ASSEMBLY OR VEHICLE DETECTION SYSTEM
2. OVERHEAD BUNDLE CONSISTING OF A 3/8" Ø MESSENGER WIRE AND OVERHEAD CONDUCTORS AND LASHING WIRE.
3. LUMINAIRE WITH MAST ARM
4. PEDESTRIAN PUSHBUTTON
5. SIGNAL FACE WITH 3 INDICATIONS OR SINGLE SHEET SIGN PANEL (10 SQFT Max)
6. RISER WITH WEATHER HEAD AS REQUIRED
7. PULL BOX AS REQUIRED
8. GROUNDING AS REQUIRED
9. SINGLE SECTION FLASHING BEACON OR SINGLE SHEET SIGN PANEL (4 SQFT Max)
10. SINGLE SHEET SIGN PANEL (4' X 4' Max) OR SIGNAL FACE WITH 3 INDICATIONS
11. FLASHING BEACON CONTROL ASSEMBLY
12. NEMA 3R ENCLOSURE, 26"(W) X 56"(H) X 12"(D) Max DIMENSIONS. Max WEIGHT INCLUDING BATTERIES, 450 LBS
13. 25' SQFT Max TOTAL PHOTOVOLTAIC PANELS MOUNTED AS SHOWN AS REQUIRED
14. 2-SECTION 12" FLASHING BEACON

NOTES:

1. IN ADDITION TO OTHER RESTRICTIONS ON MAXIMUM HORIZONTAL SPAN (I.E. DISTANCE BETWEEN WOOD POLES), THIS HORIZONTAL SPAN MUST NOT EXCEED 100'.
2. CASES 1N, 3N AND 4N MAY SUBSTITUTE THE ATTACHMENTS SHOWN IN CASE 5N IF THE PHOTOVOLTAIC PANEL IS NOT INCLUDED.

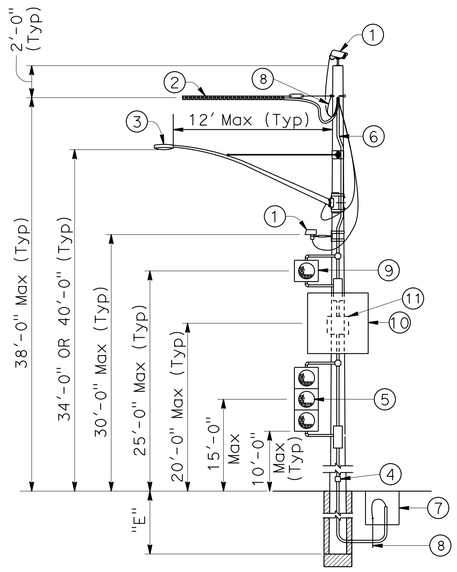

CASE 1N

POLE AT DEAD END WITH ATTACHMENTS

SEE NOTE 2

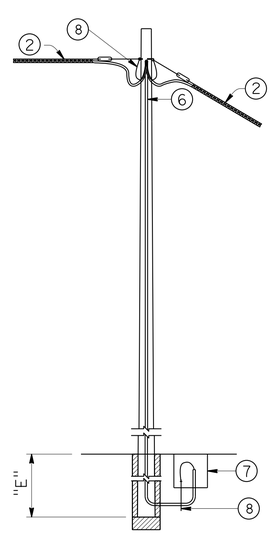

CASE 2N

POLE AT TANGENT WITHOUT ATTACHMENTS

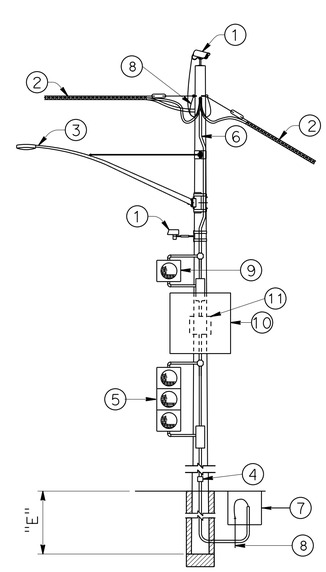

CASE 3N

POLE AT TANGENT OR CORNER WITH ATTACHMENTS

SEE NOTE 2

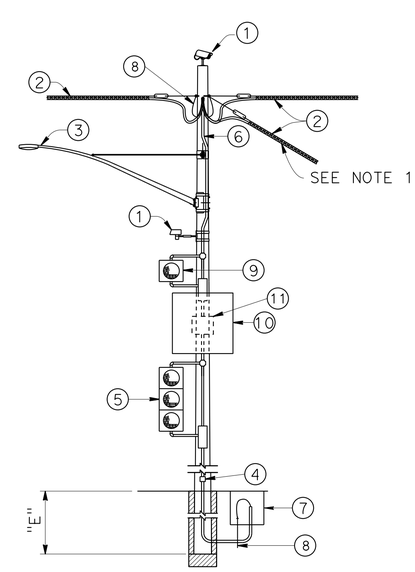

CASE 4N

POLE AT JUNCTION WITH ATTACHMENTS

SEE NOTE 2

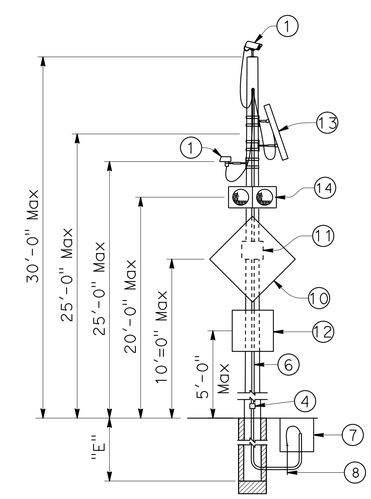

CASE 5N

POLE WITHOUT OVERHEAD BUNDLE WITH ATTACHMENTS

TEMPORARY WOOD POLES

NON-GUYED - NO SIGNALS ON SPANS

NO SCALE

E-37

STATE OF CALIFORNIA - DEPARTMENT OF TRANSPORTATION
Caltrans® DESIGN
CONSULTANT FUNCTIONAL SUPERVISOR: WILLIAM SUN
CALCULATED-DESIGNED BY: W. SUN
CHECKED BY: B. YAU
REVISED BY
DATE REVISED

LAST REVISION 00-00-00 DATE PLOTTED => 09-MAY-2016 TIME PLOTTED => 16:05

Dist	COUNTY	ROUTE	POST MILES TOTAL PROJECT	SHEET No.	TOTAL SHEETS
07	LA	60	R24.4/R25.3	240	384

REGISTERED CIVIL ENGINEER 1-15-16 DATE

3-14-16
PLANS APPROVAL DATE

REGISTERED PROFESSIONAL ENGINEER WILLIAM SUN No. 57664 Exp. 12/31/17 CIVIL STATE OF CALIFORNIA

THE STATE OF CALIFORNIA OR ITS OFFICERS OR AGENTS SHALL NOT BE RESPONSIBLE FOR THE ACCURACY OR COMPLETENESS OF SCANNED COPIES OF THIS PLAN SHEET.

LIN CONSULTING, INC.
21660 E. COPLEY DRIVE
#270
DIAMOND BAR, CA 91765

CITY OF INDUSTRY
15651 E. STAFFORD STREET
CITY OF INDUSTRY, CA 91744

LEGEND:

- A — WOOD POLE WITH ATTACHMENTS
- —OH— OVERHEAD BUNDLE
- GUY ANCHOR

POLE SELECTION TABLE

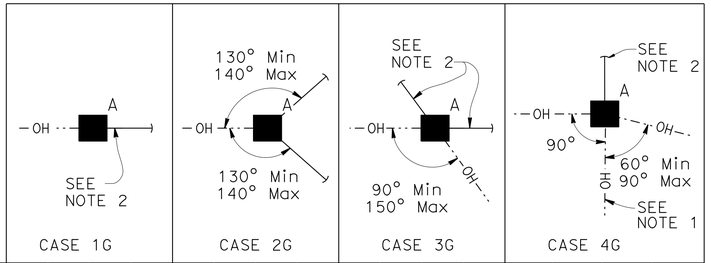

OVERHEAD BUNDLE HORIZONTAL SPAN (Max)		CASE 1G				CASE 2G				CASE 3G				CASE 4G			
	MAXIMUM d_p	1"	1.5"	2.0"	2.5"	1"	1.5"	2.0"	2.5"	1"	1.5"	2.0"	2.5"	1"	1.5"	2.0"	2.5"
50′	MINIMUM POLE CLASS	H-1	H-1	H-2	H-2	1	1	1	1	1	1	1	H-1	H-2	H-2	H-3	H-3
	POLE EMBEDMENT (E)	10′				9′				9′				11′			
100′	MINIMUM POLE CLASS	H-2	H-2	H-3	H-4	1	H-1	H-1	H-1	1	H-1	H-2	H-2	H-3	H-3	H-4	H-4
	POLE EMBEDMENT (E)	11′				9′				9′				12′			
150′	MINIMUM POLE CLASS	H-3	H-3	H-4	H-5	H-1	H-1	H-2	H-2	H-2	H-3	H-3	H-3	H-4	H-5	H-5	H-6
	POLE EMBEDMENT (E)	11′				9′				9′				12′			
200′	MINIMUM POLE CLASS	H-4	H-4	H-5	H-6	H-1	H-2	H-3	H-3	H-3	H-3	H-4	H-4	H-5	H-6		
	POLE EMBEDMENT (E)	11′				9′				9′				12′			

1. CCTV CAMERA ASSEMBLY OR VEHICLE DETECTION SYSTEM
2. OVERHEAD BUNDLE CONSISTING OF A 3/8" Ø MESSENGER WIRE AND OVERHEAD CONDUCTORS AND LASHING WIRE
3. LUMINAIRE WITH MAST ARM
4. PEDESTRIAN PUSHBUTTON
5. SIGNAL FACE WITH 3 INDICATIONS OR SINGLE SHEET SIGN PANEL (10 SQFT Max)
6. RISER WITH WEATHER HEAD AS REQUIRED
7. PULL BOX AS REQUIRED
8. GROUNDING AS REQUIRED
9. SINGLE SECTION FLASHING BEACON OR SINGLE SHEET SIGN PANEL (4 SQFT Max)
10. SINGLE SHEET SIGN PANEL (4′ X 4′ Max) OR SIGNAL FACE WITH 3 INDICATIONS
11. FLASHING BEACON CONTROL ASSEMBLY
12. 1/2" Ø GUY WIRE WITH WHITE GUY MARKER AND STRAIN INSULATOR (FOR ANCHORAGE SEE "TEMPORARY WOOD POLES-DETAILS No. 2" SHEET)

NOTES:

1. IN ADDITION TO OTHER RESTRICTIONS ON MAXIMUM HORIZONTAL SPAN, THIS HORIZONTAL SPAN MUST NOT EXCEED 100′.
2. GUY WIRE IN LINE WITH OPPOSING SPAN ± 5°.

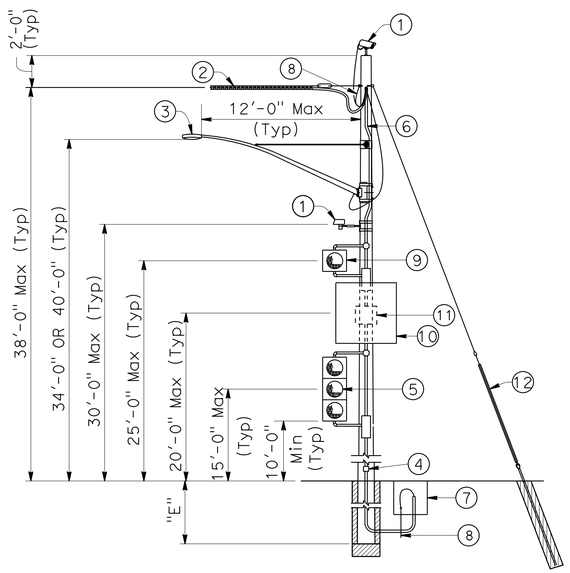

CASE 1G

POLE AT DEAD END WITH ATTACHMENTS

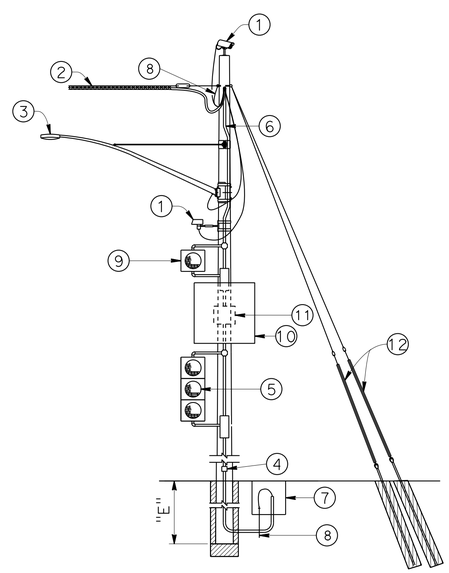

CASE 2G

POLE AT DEAD END WITH ATTACHMENTS

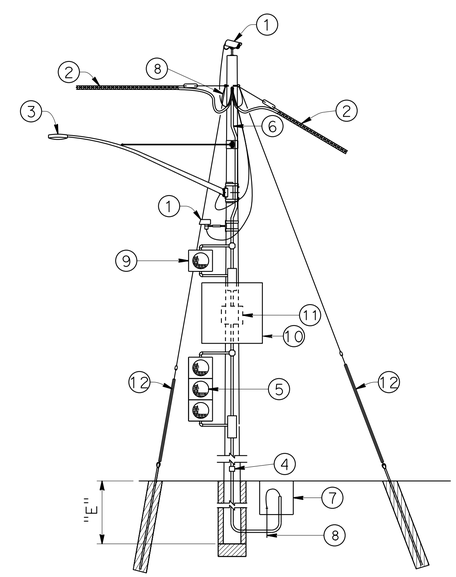

CASE 3G

POLE AT CORNER WITH ATTACHMENTS

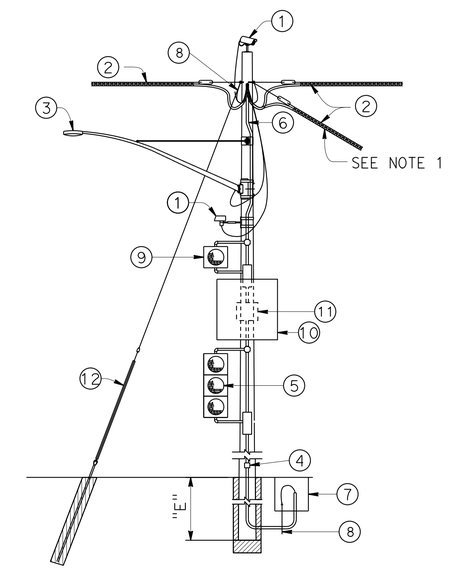

CASE 4G

POLE AT JUNCTION WITH ATTACHMENTS

TEMPORARY WOOD POLES
GUYED - NO SIGNALS ON SPANS

NO SCALE

E-38

STATE OF CALIFORNIA - DEPARTMENT OF TRANSPORTATION
Caltrans® DESIGN
CONSULTANT FUNCTIONAL SUPERVISOR: WILLIAM SUN
CALCULATED-DESIGNED BY: W. SUN
CHECKED BY: B. YAU
REVISED BY
DATE REVISED

LAST REVISION: 00-00-00
DATE PLOTTED => 09-MAY-2016
TIME PLOTTED => 16:05

Dist	COUNTY	ROUTE	POST MILES TOTAL PROJECT	SHEET No.	TOTAL SHEETS
07	LA	60	R24.4/R25.3	241	384

REGISTERED CIVIL ENGINEER 1-15-16 DATE

3-14-16
PLANS APPROVAL DATE

REGISTERED PROFESSIONAL ENGINEER WILLIAM SUN No. 57664 Exp. 12/31/17 CIVIL STATE OF CALIFORNIA

THE STATE OF CALIFORNIA OR ITS OFFICERS OR AGENTS SHALL NOT BE RESPONSIBLE FOR THE ACCURACY OR COMPLETENESS OF SCANNED COPIES OF THIS PLAN SHEET.

LIN CONSULTING, INC.
21660 E. COPLEY DRIVE
#270
DIAMOND BAR, CA 91765

CITY OF INDUSTRY
15651 E. STAFFORD STREET
CITY OF INDUSTRY, CA 91744

LEGEND:

- A — WOOD POLE WITH ATTACHMENTS
- —TS— OVERHEAD BUNDLE WITH SIGNAL FACES (SEE NOTE 2)
- —OH— OVERHEAD BUNDLE
- GUY ANCHOR

POLE SELECTION TABLE

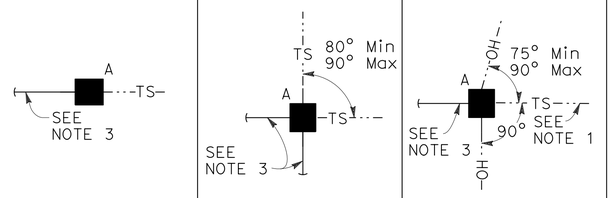

			CASE 1GT			CASE 2GT			CASE 3GT		
		MAXIMUM d_p	1"	1.5"	2.0"	1"	1.5"	2.0"	1"	1.5"	2.0"
OVERHEAD BUNDLE HORIZONTAL SPAN Max	50'	MINIMUM POLE CLASS	H-2	H-3	H-3	H-2	H-2	H-2	H-3	H-4	H-4
		POLE EMBEDMENT (E)	10'			10'			11'		
	100'	MINIMUM POLE CLASS	H-3	H-3	H-4	H-2	H-3	H-3	H-4	H-4	H-5
		POLE EMBEDMENT (E)	11'			10'			11'		
	150'	MINIMUM POLE CLASS	H-3	H-4	H-4	H-2	H-3	H-4	H-4	H-5	H-5
		POLE EMBEDMENT (E)	11'			10'			11'		

NOTES:

1. IN ADDITION TO OTHER RESTRICTIONS ON MAXIMUM HORIZONTAL SPAN, THIS HORIZONTAL SPAN MUST NOT EXCEED 100'.
2. MAXIMUM OF 2 SIGNAL FACES PER SPAN WITHIN THE HATCHED REGIONS INDICATED BY "LOCATION OF SIGNAL FACES".
3. GUY WIRE IN LINE WITH OPPOSING SPAN ± 5°.
4. PROVIDE PEDESTRIAN CLEARANCE UNDER GUY WIRE PER DETAIL.

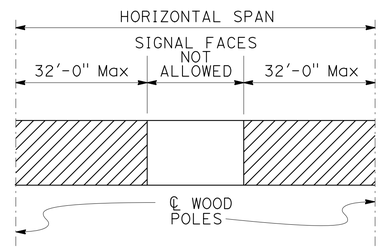

LOCATION OF SIGNAL FACES

1. CCTV CAMERA ASSEMBLY OR VEHICLE DETECTION SYSTEM
2. OVERHEAD BUNDLE CONSISTING OF 3/8" ø MESSENGER WIRE AND OVERHEAD CONDUCTORS AND LASHING WIRE
3. LUMINAIRE WITH MAST ARM
4. PEDESTRIAN PUSHBUTTON
5. SIGNAL FACE WITH 3 INDICATIONS OR SINGLE SHEET SIGN PANEL (10 SQFT Max)
6. RISER WITH WEATHER HEAD AS REQUIRED
7. PULL BOX AS REQUIRED
8. GROUNDING AS REQUIRED
9. 3/8" ø TETHER WIRE
10. 1/2" ø GUY WIRE WITH WHITE GUY MARKER AND STRAIN INSULATOR. FOR ANCHORAGE SEE "TEMPORARY WOOD POLES-DETAILS No. 2" SHEET
11. PEDESTRIAN SIGNAL HEAD

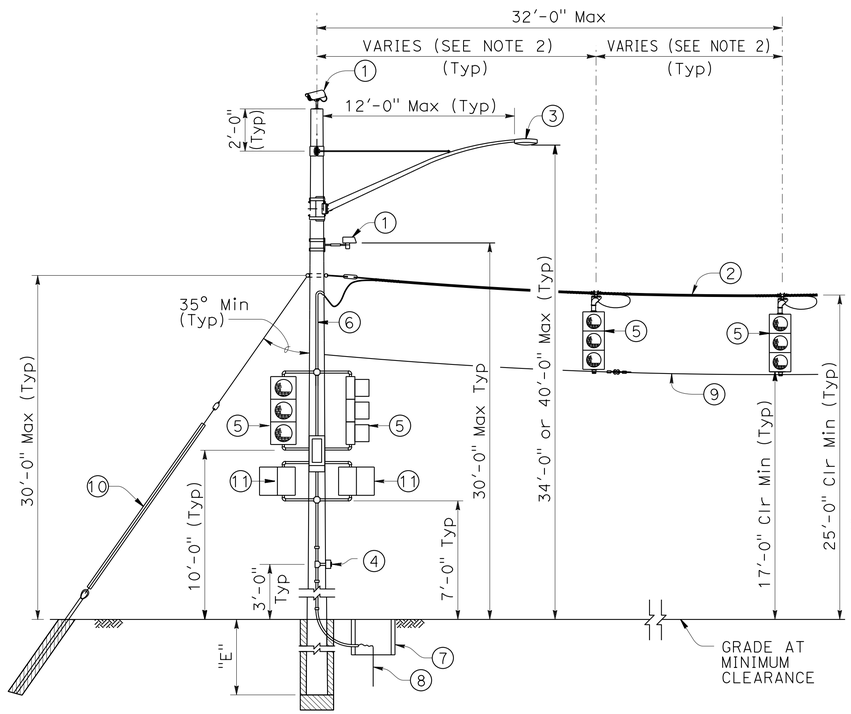

CASE 1GT

POLE AT DEAD END WITH ATTACHMENTS

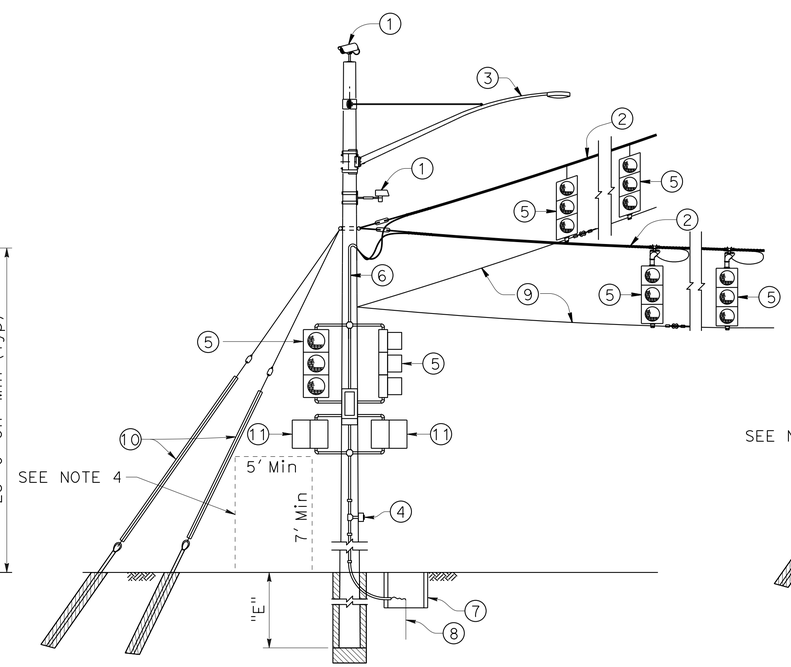

CASE 2GT

POLE AT CORNER WITH ATTACHMENTS

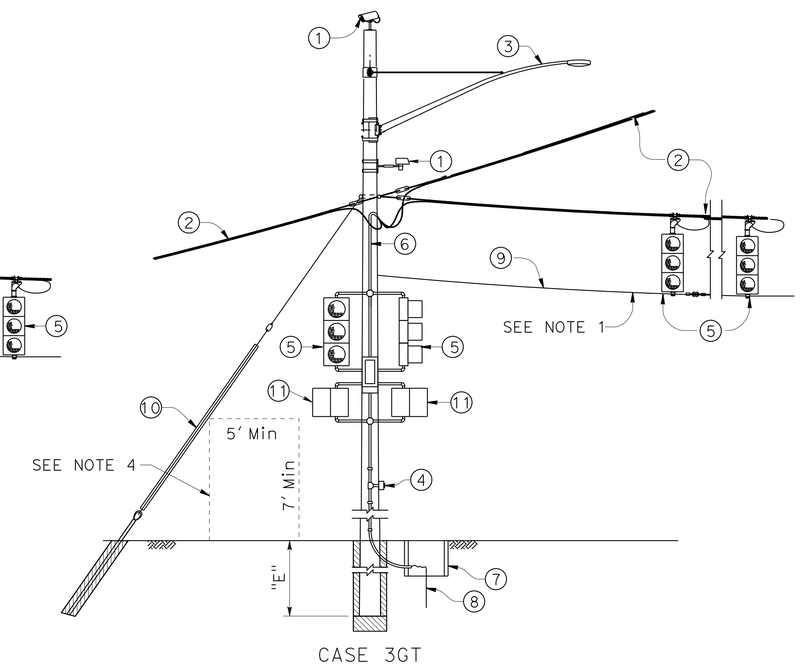

CASE 3GT

POLE AT JUNCTION WITH ATTACHMENTS

TEMPORARY WOOD POLES
GUYED - WITH SIGNAL FACES ON SPANS
NO SCALE

E-39

STATE OF CALIFORNIA - DEPARTMENT OF TRANSPORTATION
Caltrans
DESIGN
CONSULTANT FUNCTIONAL SUPERVISOR: WILLIAM SUN
CALCULATED-DESIGNED BY: W. SUN
CHECKED BY: B. YAU
REVISED BY
DATE REVISED

LAST REVISION 00-00-00
DATE PLOTTED => 09-MAY-2016
TIME PLOTTED => 16:05

Dist	COUNTY	ROUTE	POST MILES TOTAL PROJECT	SHEET No.	TOTAL SHEETS
07	LA	60	R24.4/R25.3	242	384

REGISTERED CIVIL ENGINEER 1-15-16 DATE

3-14-16
PLANS APPROVAL DATE

REGISTERED PROFESSIONAL ENGINEER WILLIAM SUN No. 57664 Exp. 12/31/17 CIVIL STATE OF CALIFORNIA

THE STATE OF CALIFORNIA OR ITS OFFICERS OR AGENTS SHALL NOT BE RESPONSIBLE FOR THE ACCURACY OR COMPLETENESS OF SCANNED COPIES OF THIS PLAN SHEET.

LIN CONSULTING, INC.
21660 E. COPLEY DRIVE
#270
DIAMOND BAR, CA 91765

CITY OF INDUSTRY
15651 E. STAFFORD STREET
CITY OF INDUSTRY, CA 91744

LEGEND:

A — WOOD POLE WITH ATTACHMENTS

—··TS—··· OVERHEAD BUNDLE WITH SIGNAL FACES (SEE NOTE1)

POLE SELECTION TABLE

A —··TS—··

CASE 1NT

OVERHEAD BUNDLE HORIZONTAL SPAN (Max)	75'	MAXIMUM d_p	1"	1.5"	2.0"
		MINIMUM POLE CLASS	H-5	H-6	H-6
		POLE EMBEDMENT (E)	13'		

1. CCTV CAMERA ASSEMBLY OR VEHICLE DETECTION SYSTEM
2. OVERHEAD BUNBLE CONSISTING OF A 3/8" ø MESSENGER WIRE AND OVERHEAD CONDUCTORS AND LASHING WIRE
3. LUMINAIRE WITH MAST ARM
4. PEDESTRIAN PUSHBUTTON
5. SIGNAL FACE WITH 3 INDICATIONS OR SINGLE SHEET SIGN PANEL (10 SQFT Max)
6. RISER WITH WEATHER HEAD AS REQUIRED
7. PULL BOX AS REQUIRED
8. GROUNDING AS REQUIRED
9. 3/8" ø TETHER WIRE
10. PEDESTRIAN SIGNAL HEAD

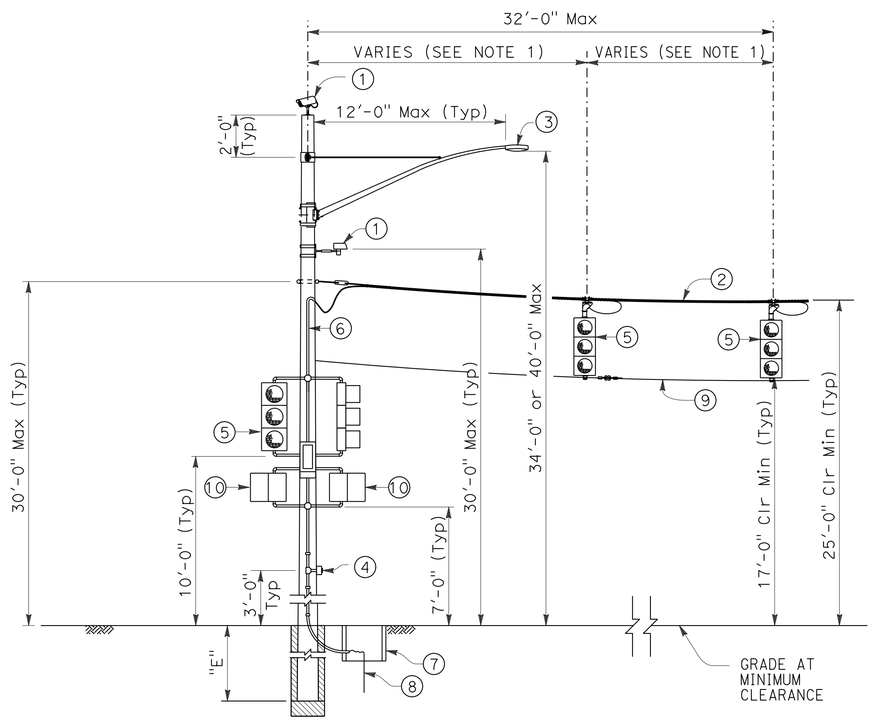

CASE 1NT

POLE AT DEAD END WITH ATTACHMENTS

NOTE:

MAXIMUM OF 2 SIGNAL FACES PER SPAN WITHIN THE HATCHED REGIONS INDICATED BY "LOCATION OF SIGNAL FACES".

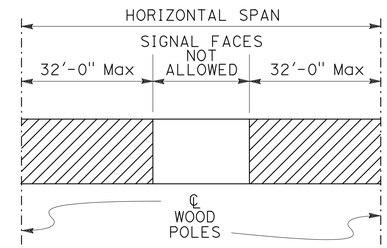

LOCATION OF SIGNAL FACES

TEMPORARY WOOD POLES

NON-GUYED - WITH SIGNAL FACES ON SPAN

NO SCALE

E-40

STATE OF CALIFORNIA - DEPARTMENT OF TRANSPORTATION
Caltrans
DESIGN

CONSULTANT FUNCTIONAL SUPERVISOR: WILLIAM SUN
CALCULATED-DESIGNED BY: W. SUN
CHECKED BY
REVISED BY
DATE REVISED

LAST REVISION 00-00-00
DATE PLOTTED => 09-MAY-2016
TIME PLOTTED => 16:05

Dist	COUNTY	ROUTE	POST MILES TOTAL PROJECT	SHEET No.	TOTAL SHEETS
07	LA	60	R24.4/R25.3	243	384

REGISTERED CIVIL ENGINEER 1-15-16 DATE

3-14-16
PLANS APPROVAL DATE

REGISTERED PROFESSIONAL ENGINEER WILLIAM SUN No. 57664 Exp. 12/31/17 CIVIL STATE OF CALIFORNIA

THE STATE OF CALIFORNIA OR ITS OFFICERS OR AGENTS SHALL NOT BE RESPONSIBLE FOR THE ACCURACY OR COMPLETENESS OF SCANNED COPIES OF THIS PLAN SHEET.

LIN CONSULTING, INC.
21660 E. COPLEY DRIVE
#270
DIAMOND BAR, CA 91765

CITY OF INDUSTRY
15651 E. STAFFORD STREET
CITY OF INDUSTRY, CA 91744

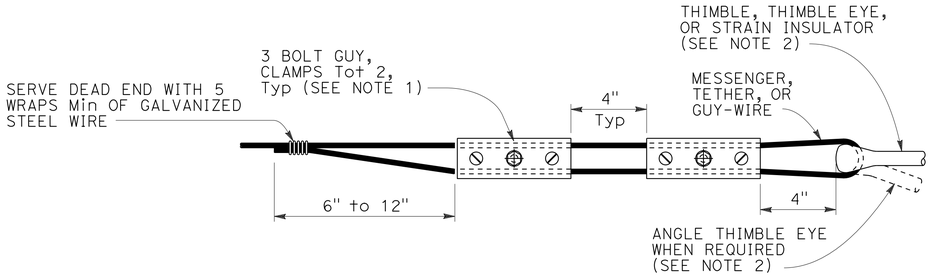

ALTERNATIVE TERMINATION OF MESSENGER WIRES USING GUY CLAMPS

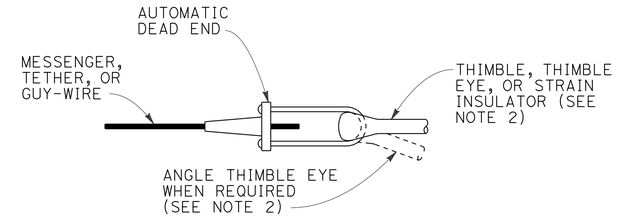

TERMINATION OF WIRES USING AUTOMATIC DEAD END

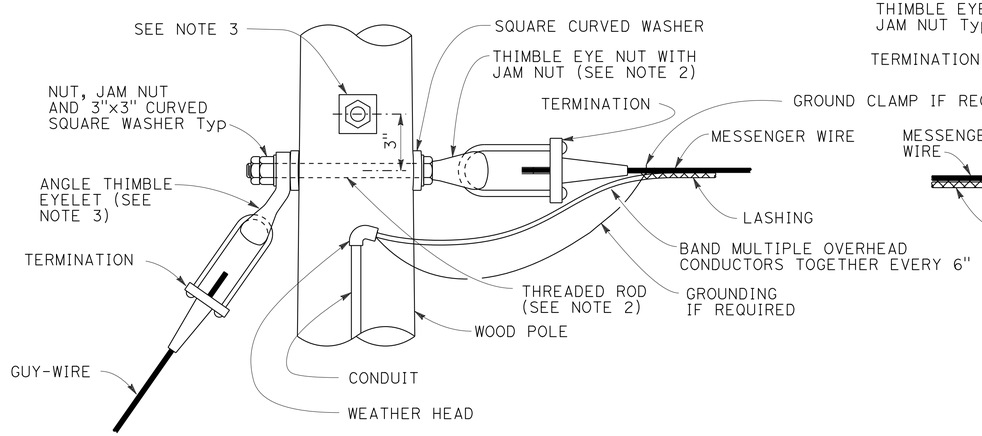

POLE AT DEAD END WITH GUY-WIRE CONNECTION

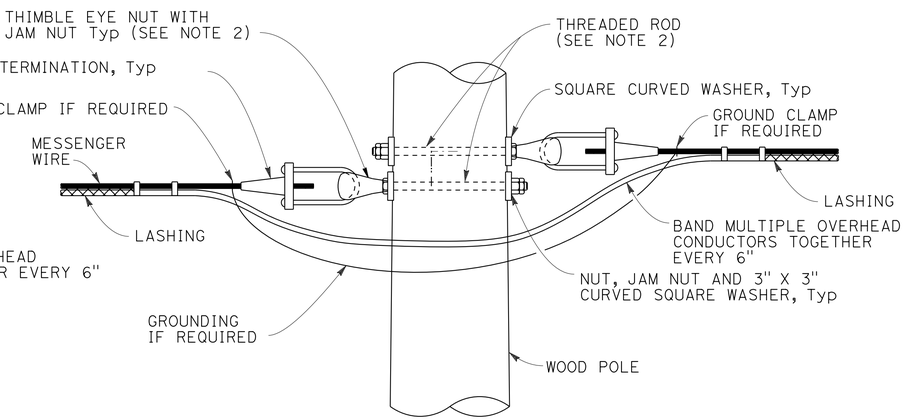

POLE AT TANGENT OR CORNER CONNECTION

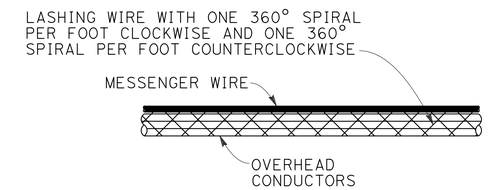

DOUBLE LASHING DETAIL

USE IF d_p IS GREATER THAN 1½"

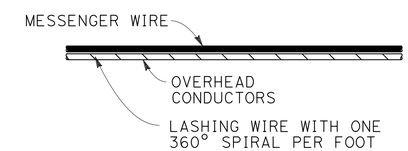

TYPICAL LASHING DETAIL

USE IF d_p IS 1½" OR LESS

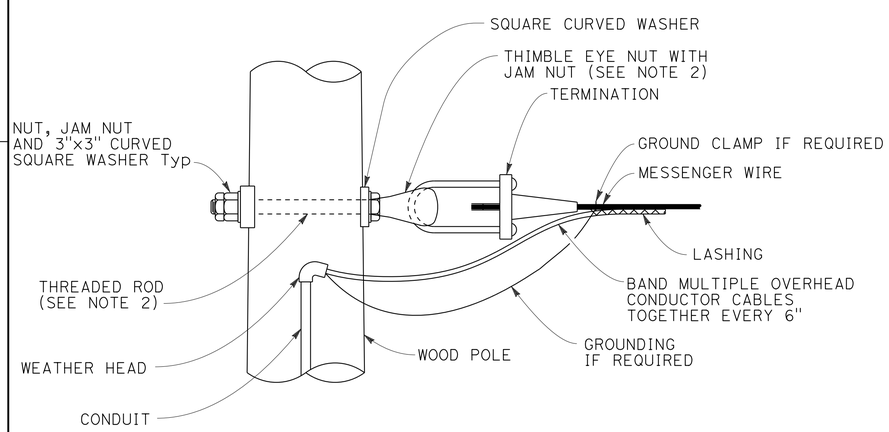

POLE AT DEAD END CONNECTION

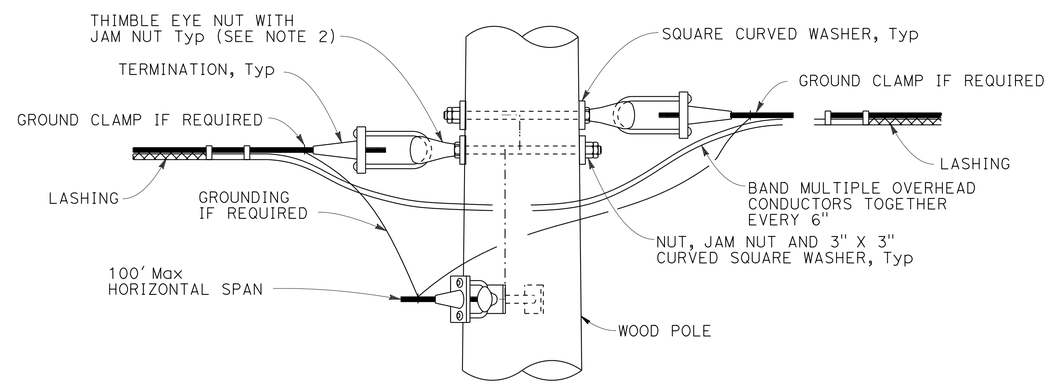

POLE AT JUNCTION CONNECTION

NOTES:

1. FOR GUY WIRES USE 3 CLAMPS.
2. USE ⅝" ø EXCEPT ¾" ø AT GUYED WIRES.
3. INSTALL ADDITIONAL ANGLE THIMBLE EYELET AT POLES WITH TWO GUY WIRES.

TEMPORARY WOOD POLES

DETAIL No. 1

NO SCALE

E-41

STATE OF CALIFORNIA - DEPARTMENT OF TRANSPORTATION
Caltrans®
DESIGN
CONSULTANT FUNCTIONAL SUPERVISOR WILLIAM SUN
CALCULATED-DESIGNED BY W. SUN
CHECKED BY
REVISED BY B. YAU
DATE REVISED

LAST REVISION 00-00-00
DATE PLOTTED => 09-MAY-2016
TIME PLOTTED => 16:05

Dist	COUNTY	ROUTE	POST MILES TOTAL PROJECT	SHEET No.	TOTAL SHEETS
07	LA	60	R24.4/R25.3	244	384

REGISTERED CIVIL ENGINEER 1-15-16 DATE

3-14-16
PLANS APPROVAL DATE

REGISTERED PROFESSIONAL ENGINEER WILLIAM SUN No. 57664 Exp. 12/31/17 CIVIL STATE OF CALIFORNIA

THE STATE OF CALIFORNIA OR ITS OFFICERS OR AGENTS SHALL NOT BE RESPONSIBLE FOR THE ACCURACY OR COMPLETENESS OF SCANNED COPIES OF THIS PLAN SHEET.

LIN CONSULTING, INC.
21660 E. COPLEY DRIVE
#270
DIAMOND BAR, CA 91765

CITY OF INDUSTRY
15651 E. STAFFORD STREET
CITY OF INDUSTRY, CA 91744

NOTES:

1. MINIMUM ALLOWABLE TENSION CAPACITY "Qa" = 8,900 Lbs.
2. MINIMUM INSTALLATION TORQUE "T" = 1780 Lbs-ft.
3. HELICAL ANCHOR DETAIL MAY BE USED IN PLACE OF EXPANDED STEEL ANCHORS.

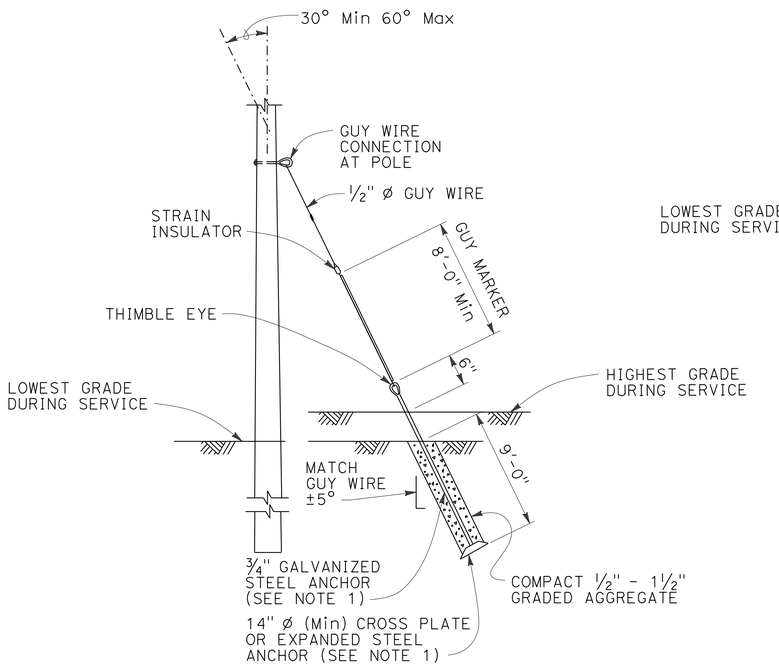

EXPANDED STEEL ANCHOR DETAIL
SEE NOTE 3

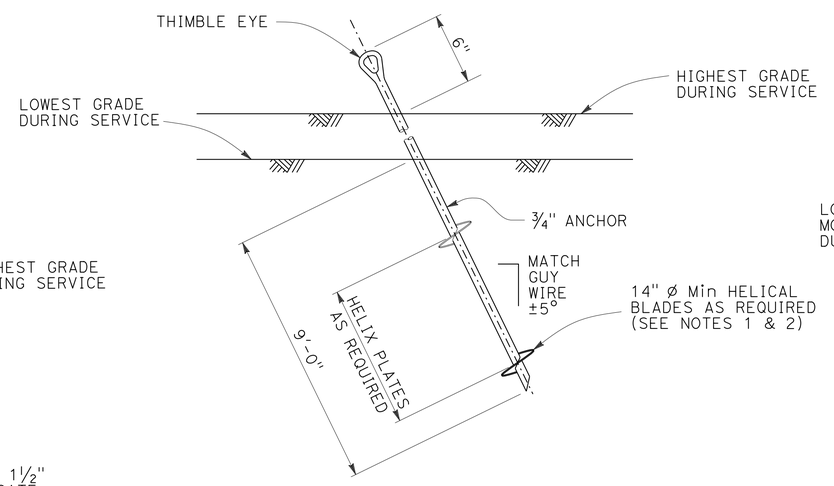

HELICAL ANCHOR DETAIL

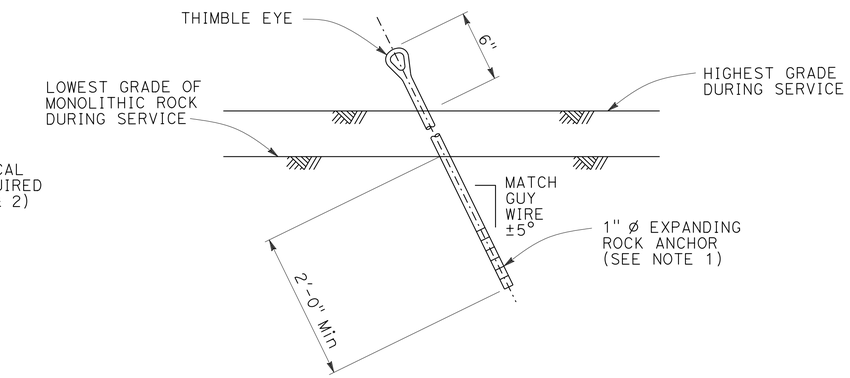

EXPANDING ROCK ANCHOR DETAIL

TEMPORARY WOOD POLES
DETAIL No. 2
NO SCALE

E-42

STATE OF CALIFORNIA - DEPARTMENT OF TRANSPORTATION
Caltrans®
DESIGN
CONSULTANT FUNCTIONAL SUPERVISOR: WILLIAM SUN
CALCULATED-DESIGNED BY: B. YAU
CHECKED BY: W. SUN
REVISED BY
DATE REVISED

LAST REVISION 00-00-00
DATE PLOTTED => 09-MAY-2016
TIME PLOTTED => 16:05

Dist	COUNTY	ROUTE	POST MILES TOTAL PROJECT	SHEET No.	TOTAL SHEETS
07	LA	60	R24.4/R25.3	245	384

REGISTERED CIVIL ENGINEER — DATE 1-15-16

3-14-16
PLANS APPROVAL DATE

REGISTERED PROFESSIONAL ENGINEER — WILLIAM SUN — No. 57664 — Exp. 12/31/17 — CIVIL — STATE OF CALIFORNIA

THE STATE OF CALIFORNIA OR ITS OFFICERS OR AGENTS SHALL NOT BE RESPONSIBLE FOR THE ACCURACY OR COMPLETENESS OF SCANNED COPIES OF THIS PLAN SHEET.

LIN CONSULTING, INC.
21660 E. COPLEY DRIVE
#270
DIAMOND BAR, CA 91765

CITY OF INDUSTRY
15651 E. STAFFORD STREET
CITY OF INDUSTRY, CA 91744

NOTES:

1. LUMINAIRE MAST ARMS MUST BE IN COMPLIANCE WITH STANDARD PLAN ES-6D WITH NOTED MODIFICATIONS.
2. VERIFY POLE DIMENSIONS AT TIE-ROD ATTACHMENT HEIGHT. FABRICATE 8" FLAT BAR WITH "L" DIMENSION TO MAINTAIN AN OPEN GAP BETWEEN FLANGES IN FINISHED INSTALLATION.
3. NOT ALL SCREW HEADS AND BOLT HEADS ARE SHOWN FOR CLARITY.
4. MAST ARM NOT SHOWN FOR CLARITY.

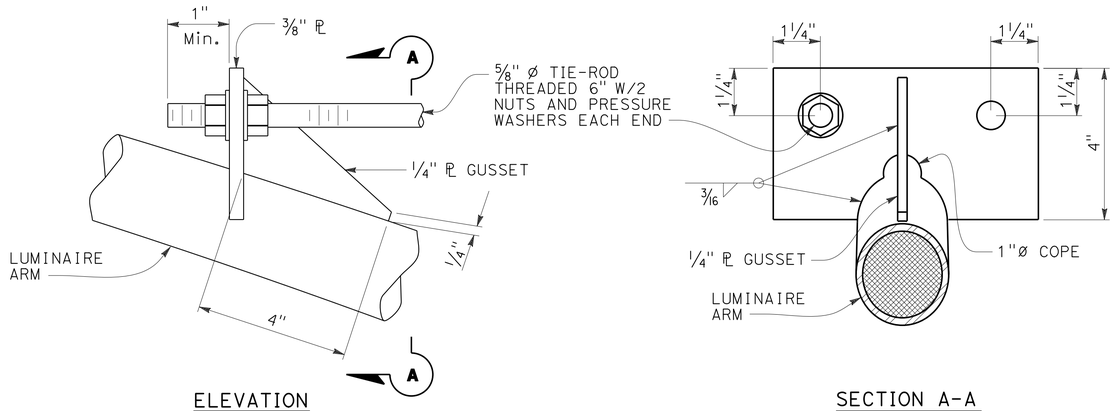

ELEVATION

SECTION A-A

DETAIL A
TIE-ROD AT LUMINAIRE ARM

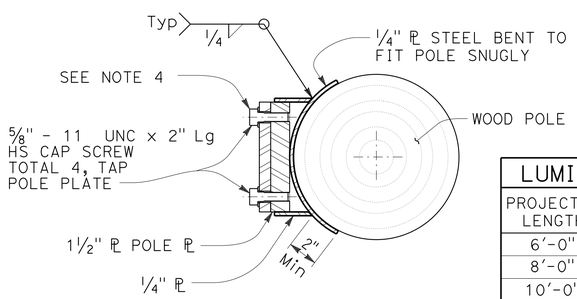

SECTION E-E

LUMINAIRE MAST ARM DATA			
PROJECTED LENGTH	N RISE	Min OD AT POLE	NOMINAL THICKNESS
6'-0"	2'-0"±	3 1/4"	0.1196"
8'-0"	2'-6"±	3 1/2"	
10'-0"	3'-3"±	3 7/8"	
12'-0"	4'-3"±		

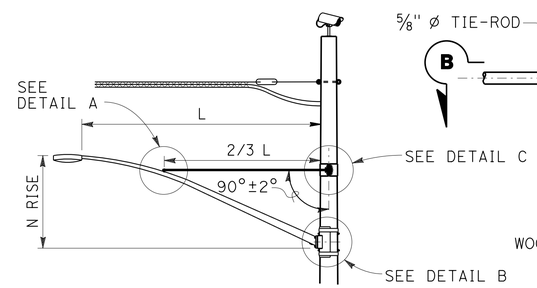

LUMINAIRE MAST ARM

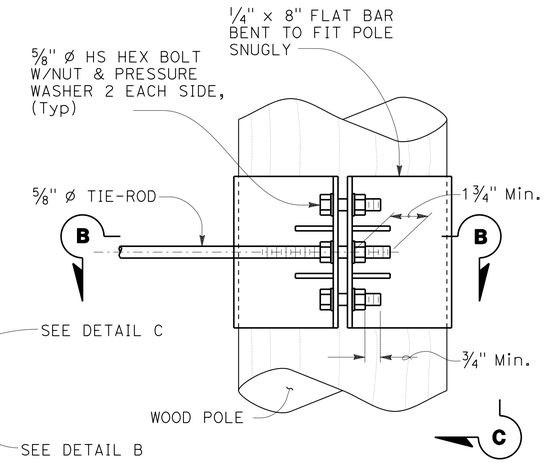

ELEVATION

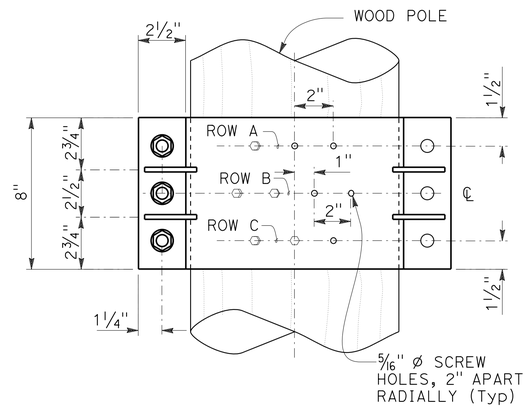

VIEW C-C

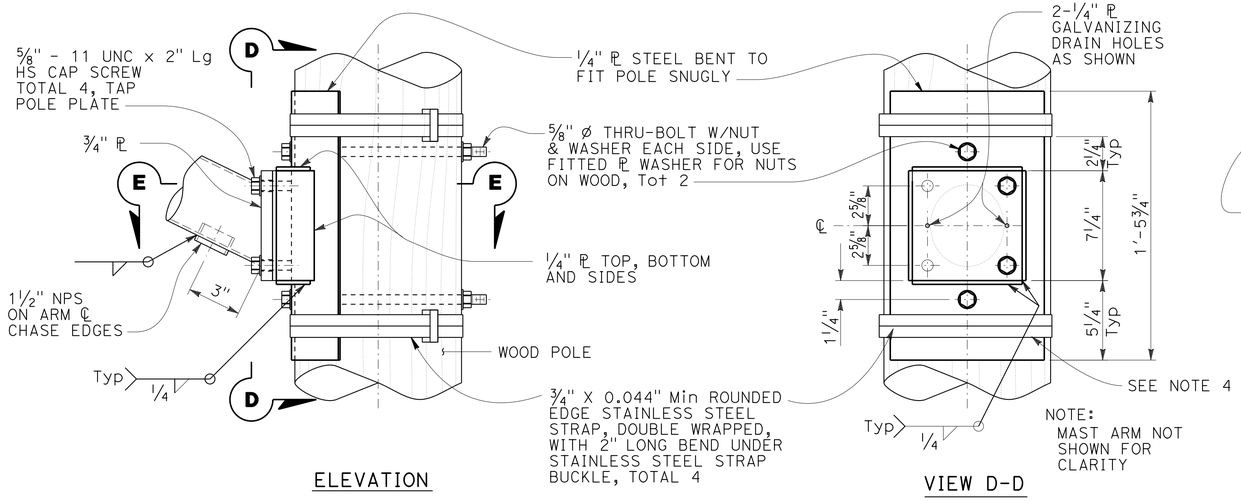

ELEVATION

VIEW D-D

DETAIL B
ARM CONNECTION DETAILS

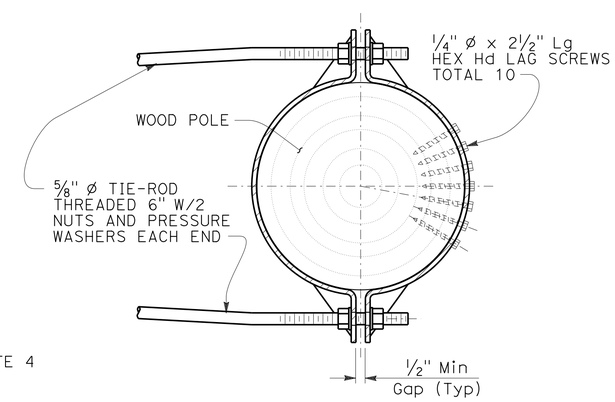

SECTION B-B

DETAIL C
TIE-ROD AT POLE

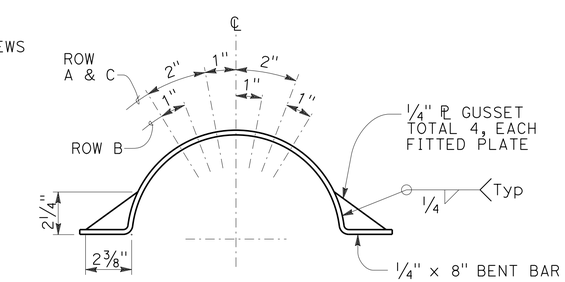

LAG SCREW AND
GUSSET PLATE LAYOUT

TEMPORARY WOOD POLES

DETAIL No. 3

NO SCALE

E-43

REVISED BY	DATE REVISED	CALCULATED-DESIGNED BY	CHECKED BY
B. YAU	W. SUN		

CONSULTANT FUNCTIONAL SUPERVISOR: WILLIAM SUN

STATE OF CALIFORNIA - DEPARTMENT OF TRANSPORTATION — DESIGN — Caltrans

LAST REVISION 00-00-00 | DATE PLOTTED => 09-MAY-2016 | TIME PLOTTED => 16:05

Dist	COUNTY	ROUTE	POST MILES TOTAL PROJECT	SHEET No.	TOTAL SHEETS
07	LA	60	R24.4/R25.3	246	384

REGISTERED CIVIL ENGINEER 1-15-16 DATE

3-14-16
PLANS APPROVAL DATE

REGISTERED PROFESSIONAL ENGINEER WILLIAM SUN No. 57664 Exp. 12/31/17 CIVIL STATE OF CALIFORNIA

THE STATE OF CALIFORNIA OR ITS OFFICERS OR AGENTS SHALL NOT BE RESPONSIBLE FOR THE ACCURACY OR COMPLETENESS OF SCANNED COPIES OF THIS PLAN SHEET.

LIN CONSULTING, INC.
21660 E. COPLEY DRIVE
#270
DIAMOND BAR, CA 91765

CITY OF INDUSTRY
15651 E. STAFFORD STREET
CITY OF INDUSTRY, CA 91744

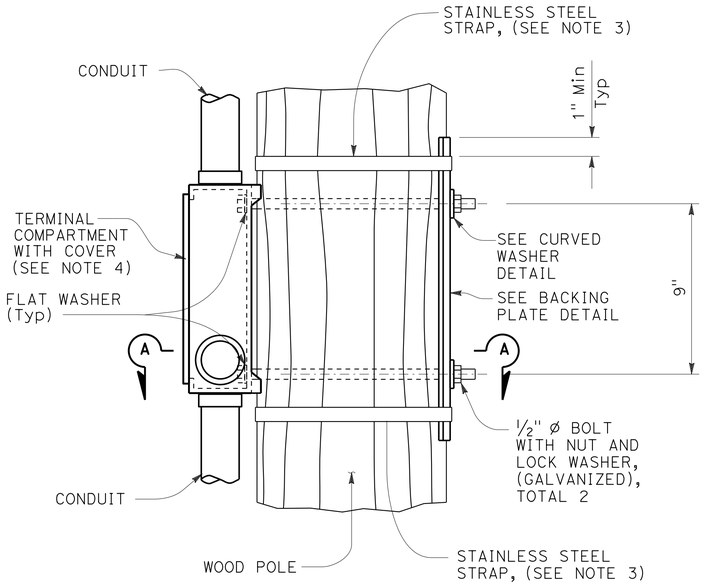

ELEVATION

NOTES:

1. VERIFY POLE DIMENSIONS AT TERMINAL COMPARTMENT FOR FABRICATION OF BACKING PLATE AND CURVED WASHER.
2. BACKING PLATE TO BE GALVANIZED AFTER FABRICATION.
3. ¾" x 0.044" MINIMUM, ROUNDED EDGE STAINLESS STEEL STRAPS, DOUBLE WRAPPED WITH 2" LONG BEND UNDER STAINLESS STEEL STRAP BUCKLE.
4. FOR DETAILS NOT SHOWN SEE STANDARD PLAN ES-4D.

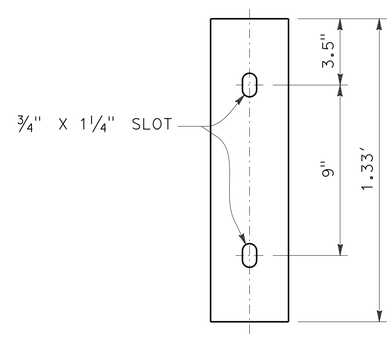

ELEVATION

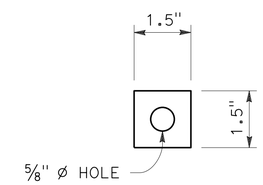

ELEVATION

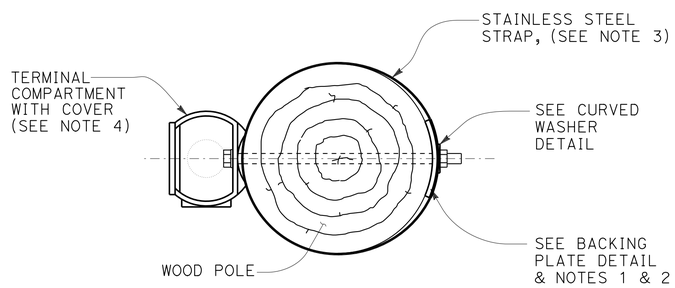

SECTION A-A

PLAN

BACKING PLATE DETAIL

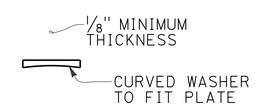

PLAN

CURVED WASHER DETAIL

SIDE MOUNTING
TERMINAL COMPARTMENT

TEMPORARY WOOD POLES
DETAIL No. 4
NO SCALE

E-44

STATE OF CALIFORNIA - DEPARTMENT OF TRANSPORTATION
Caltrans® DESIGN
CONSULTANT FUNCTIONAL SUPERVISOR: WILLIAM SUN
CALCULATED-DESIGNED BY: W. SUN
CHECKED BY
REVISED BY
DATE REVISED

LAST REVISION 00-00-00
DATE PLOTTED => 09-MAY-2016
TIME PLOTTED => 16:05

Dist	COUNTY	ROUTE	POST MILES TOTAL PROJECT	SHEET No.	TOTAL SHEETS
07	LA	60	R24.4/R25.3	247	384

REGISTERED CIVIL ENGINEER 1-15-16 DATE

3-14-16
PLANS APPROVAL DATE

REGISTERED PROFESSIONAL ENGINEER WILLIAM SUN No. 57664 Exp. 12/31/17 CIVIL STATE OF CALIFORNIA

THE STATE OF CALIFORNIA OR ITS OFFICERS OR AGENTS SHALL NOT BE RESPONSIBLE FOR THE ACCURACY OR COMPLETENESS OF SCANNED COPIES OF THIS PLAN SHEET.

LIN CONSULTING, INC.
21660 E. COPLEY DRIVE
#270
DIAMOND BAR, CA 91765

CITY OF INDUSTRY
15651 E. STAFFORD STREET
CITY OF INDUSTRY, CA 91744

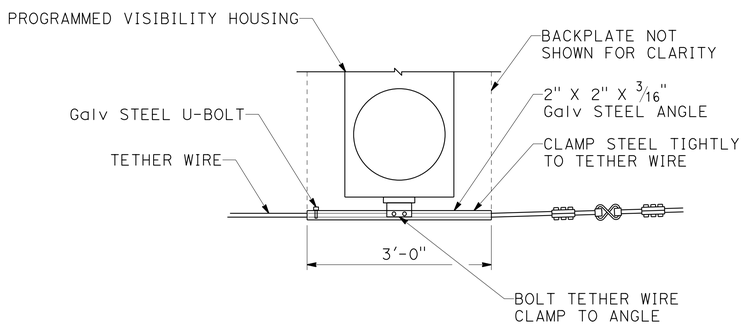

TETHER WIRE ATTACHMENT FOR PROGRAMMED VISIBILITY SIGNAL FACE

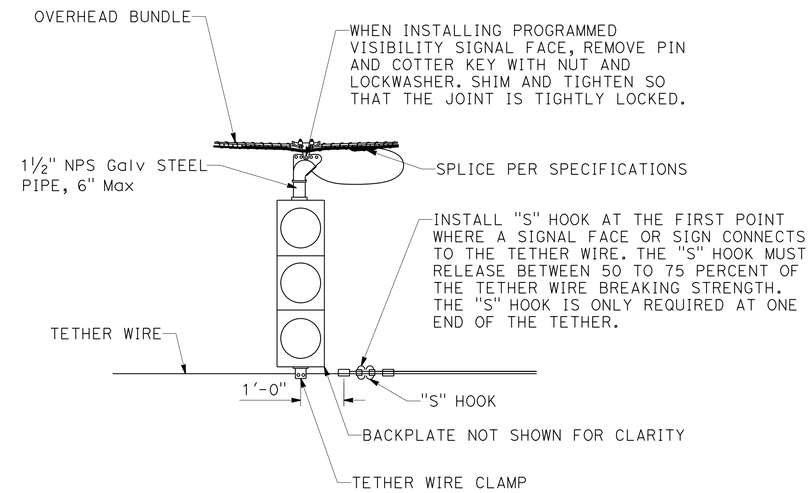

SIGNAL FACE SUPPORT

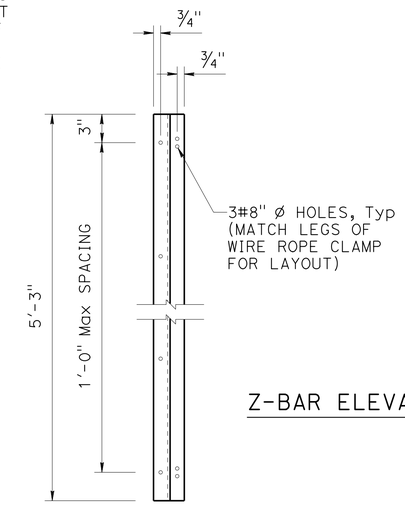

Z-BAR ELEVATION

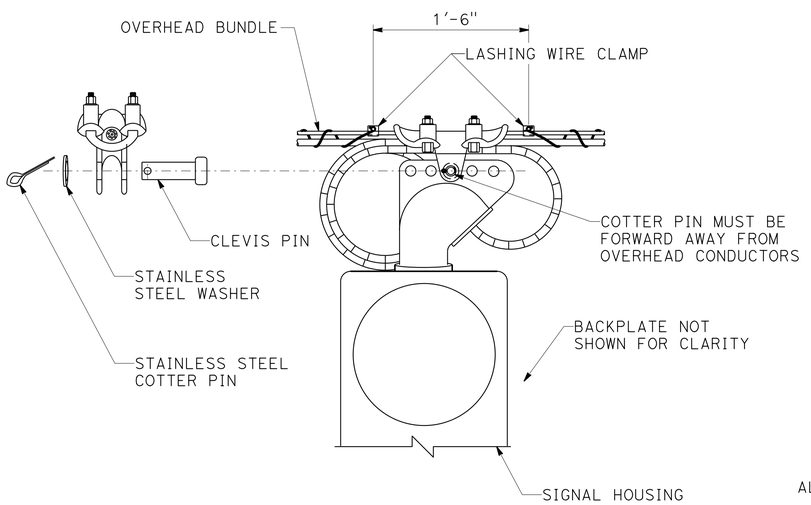

MESSENGER WIRE CLAMP COTTER PIN DETAIL

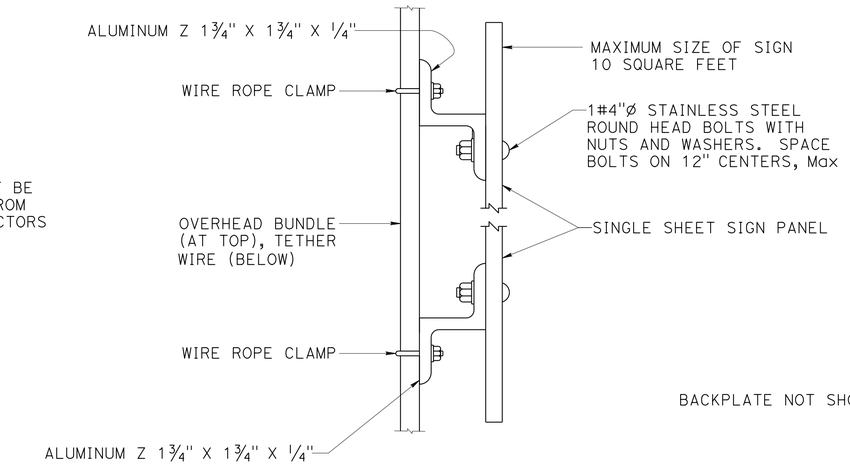

NOTE:

THE OVERLAPPED CONNECTION OF ADJUSTABLE HANGERS MUST USE A MINIMUM OF 2 BOLTS WITH A MINIMUM SPACING BETWEEN BOLTS OF 2"

SIGN MOUNTING DETAIL

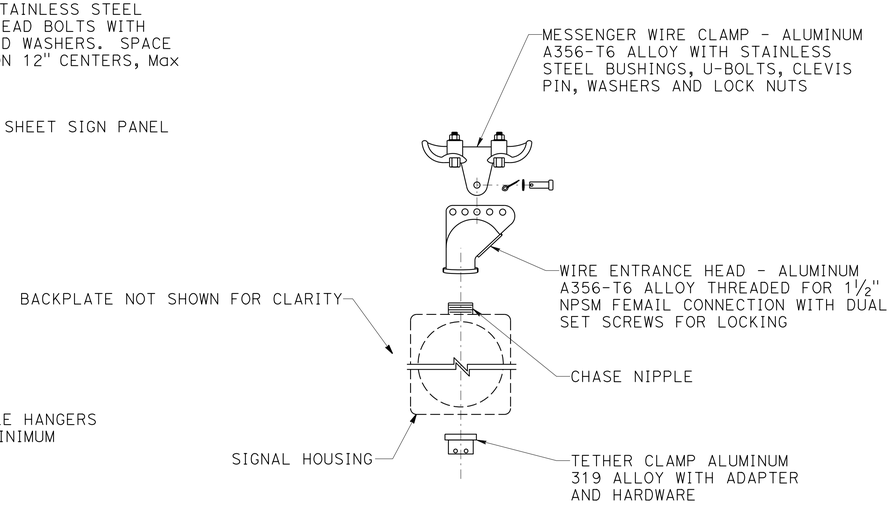

SIGNAL FACE SUPPORT EXPLODED VIEW

TEMPORARY WOOD POLES
DETAIL No. 5
NO SCALE

E-45

STATE OF CALIFORNIA - DEPARTMENT OF TRANSPORTATION
Caltrans®
DESIGN
CONSULTANT FUNCTIONAL SUPERVISOR: WILLIAM SUN
CALCULATED-DESIGNED BY: W. SUN
CHECKED BY: B. YAU
REVISED BY
DATE REVISED

LAST REVISION 00-00-00
DATE PLOTTED => 09-MAY-2016
TIME PLOTTED => 16:05

Dist	COUNTY	ROUTE	POST MILES TOTAL PROJECT	SHEET No.	TOTAL SHEETS
07	LA	60	R24.4/R25.3	248	384

REGISTERED CIVIL ENGINEER — DATE 1-15-16

3-14-16
PLANS APPROVAL DATE

REGISTERED PROFESSIONAL ENGINEER — WILLIAM SUN — No. 57664 — Exp. 12/31/17 — CIVIL — STATE OF CALIFORNIA

THE STATE OF CALIFORNIA OR ITS OFFICERS OR AGENTS SHALL NOT BE RESPONSIBLE FOR THE ACCURACY OR COMPLETENESS OF SCANNED COPIES OF THIS PLAN SHEET.

LIN CONSULTING, INC.
21660 E. COPLEY DRIVE
#270
DIAMOND BAR, CA 91765

CITY OF INDUSTRY
15651 E. STAFFORD STREET
CITY OF INDUSTRY, CA 91744

NOTES: (THIS SHEET ONLY)

1. FOR ACCURATE RIGHT OF WAY DATA, CONTACT RIGHT OF WAY ENGINEERING AT THE DISTRICT OFFICE.
2. ALL NEW PULL BOXES MUST BE TRAFFIC TYPE WITH TAMPER RESISTANT COVER.

LEGEND: (THIS SHEET ONLY)

[1] FOR REFERENCE ONLY. IRRIGATION CONTROLLER PER IRRIGATION PLAN. SEE IP-2 FOR DETAILS

[2] SEE MODIFY RAMP METERING SYSTEM (STAGE 3A)(FINAL) FOR INSTALLATION OF SERVICE EQUIPMENT ENCLOSURE

Ctid: 0753060R24441
ADDRESS: 521 U GRAND Ave, DIAMOND BAR, CA
METER No. 1: 100 A, 240 V, 2P CB (MAIN BREAKER)
50 A, 120 V, 1P CB (SIGNAL)
30 A, 120 V, 1P CB (SAFETY LIGHTING)
15 A, 120 V. 1P CB (PEC)
15 A, 120 V, 1P CB (IISNS)

Ctid: 0753060R24443
ADDRESS: 521 U1 GRAND Ave, DIAMOND BAR, CA
METER No. 2: 100 A, 240 V, 2P CB (MAIN BREAKER)
30 A, 240 V, 2P CB (LIGHTING)
15 A, 120 V, 1P CB (LIGHTING CONTROL)
30 A, 120 V, 1P CB (RAMP METERING)
15 A, 120 V, 1P CB (IRRIGATION)

[3] ADD 2#8 (IRRIGATION), 1#8(G) IN 2" C

(TR) - TAMPER RESISTANT COVER FOR PULL BOX

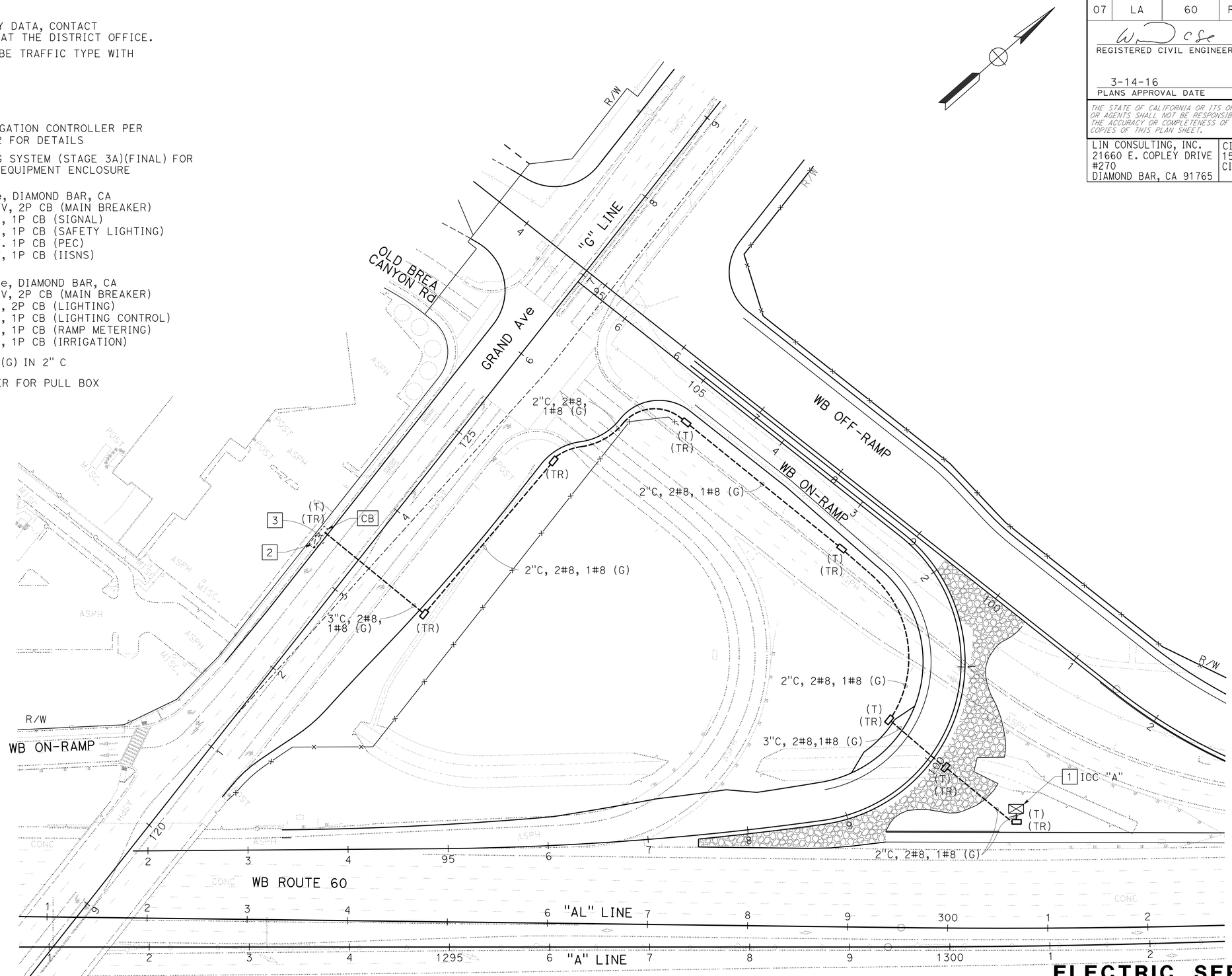

APPROVED FOR ELECTRICAL WORK ONLY

ELECTRIC SERVICE FOR IRRIGATION

SCALE: 1" = 50'

E-46

STATE OF CALIFORNIA - DEPARTMENT OF TRANSPORTATION
Caltrans
DESIGN
CONSULTANT FUNCTIONAL SUPERVISOR: WILLIAM SUN
CALCULATED-DESIGNED BY: B. YAU
CHECKED BY: W. SUN
REVISED BY
DATE REVISED

LAST REVISION 00-00-00
DATE PLOTTED => 09-MAY-2016
TIME PLOTTED => 16:05

Dist	COUNTY	ROUTE	POST MILES TOTAL PROJECT	SHEET No.	TOTAL SHEETS
07	LA	60	R24.4/R25.3	249	384

REGISTERED CIVIL ENGINEER 1-15-16 DATE

3-14-16
PLANS APPROVAL DATE

REGISTERED PROFESSIONAL ENGINEER WILLIAM SUN No. 57664 Exp. 12/31/17 CIVIL STATE OF CALIFORNIA

THE STATE OF CALIFORNIA OR ITS OFFICERS OR AGENTS SHALL NOT BE RESPONSIBLE FOR THE ACCURACY OR COMPLETENESS OF SCANNED COPIES OF THIS PLAN SHEET.

LIN CONSULTING, INC.
21660 E. COPLEY DRIVE
#270
DIAMOND BAR, CA 91765

CITY OF INDUSTRY
15651 E. STAFFORD STREET
CITY OF INDUSTRY, CA 91744

LEGEND: (SHEETS E-47 TO E-59)

[V] EXISTING SPLICE VAULT

[V] NEW SPLICE VAULT

1. SPLICE TEMPORARY 72SMFO CABLE TO EXISTING 48SMFO AND 72SMFO CABLES
2. SPLICE TEMPORARY 2-12SMFO CABLES TO EXISTING 48SMFO CABLE
3. INSTALL 12SMFO AND 72SMFO CABLES IN 3" CONDUIT (TYPE H) RISER
4. INSTALL 12SMFO CABLE IN 2" CONDUIT (TYPE H) RISER
5. INSTALL OVERHEAD LINE WITH A MINIMUM OF 25 FEET CLEARANCE ABOVE GROUND AND PROVIDE DEAD-END ASSEMBLIES AS NEEDED
6. EXISTING 30 FEET COILED 12SMFO CABLE FOR FUTURE CONNECTION TO IRRIGATION CONTROLLER ENCLOSURE CABINET
7. CONTRACTOR MAY UTILIZE WOOD POLES FROM MODIFY LIGHTING AND SIGN ILLUMINATION PLAN
8. INSTALL 72SMFO CABLE IN 2" CONDUIT (TYPE H) RISER
9. INSTALL SPLICE ENCLOSURES AND SPLICE NEW 36SMFO, 48SMFO AND 72SMFO CABLES TO EXISTING 36SMFO, 48SMFO AND 72SMFO CABLES
10. JACK CONDUIT(S) BENEATH ROADWAY. SEE SHEET MODIFY COMMUNICATION SYSTEM (CONSTRUCTION DETAILS) FOR DETAILS
11. TRENCH AND INSTALL CONDUIT(S) IN SOIL. SEE SHEET MODIFY COMMUNICATION SYSTEM (TRENCH DETAILS) FOR DETAILS
12. SPLICE NEW 36SMFO, 48SMFO AND 72SMFO CABLES TO EXISTING 36SMFO, 48SMFO AND 72SMFO CABLES
13. INSTALL SPLICE ENCLOSURE AND SPLICE NEW 2-12SMFO CABLES TO NEW 48SMFO CABLE
14. COIL 50 FEET 12SMFO CABLE FOR FUTURE CONNECTION TO IRRIGATION CONTROLLER CABINET. CAP CONDUIT ENDS
15. [RC] EXISTING INNERDUCT. INSTALL NEW INNERDUCT

NOTE:

FIBER SPLICING ASSIGNMENTS FOR TEMPORARY AND PERMANENT COMMUNICATION PER ITS TMC SUPPORT.

ABBREVIATIONS:

12SMFO - 12 SINGLE MODE FIBER OPTIC
36SMFO - 36 SINGLE MODE FIBER OPTIC
48SMFO - 48 SINGLE MODE FIBER OPTIC
72SMFO - 72 SINGLE MODE FIBER OPTIC
SMFO - SINGLE MODE FIBER OPTIC
RMS - RAMP METERING SYSTEM

(MODIFYING FIBER OPTIC SYSTEM)
(LEGEND, NOTE, ABBREVIATIONS)

MODIFYING EXISTING ELECTRICAL SYSTEM

E-47

STATE OF CALIFORNIA - DEPARTMENT OF TRANSPORTATION
Caltrans DESIGN

CONSULTANT FUNCTIONAL SUPERVISOR: WILLIAM SUN
CALCULATED-DESIGNED BY: R. WOO
CHECKED BY: W. SUN
REVISED BY
DATE REVISED

LAST REVISION 00-00-00
DATE PLOTTED => 27-MAY-2016
TIME PLOTTED => 08:18

Dist	COUNTY	ROUTE	POST MILES TOTAL PROJECT	SHEET No.	TOTAL SHEETS
07	LA	60	R24.4/R25.3	250	384

REGISTERED CIVIL ENGINEER 1-15-16 DATE

3-14-16
PLANS APPROVAL DATE

REGISTERED PROFESSIONAL ENGINEER WILLIAM SUN No. 57664 Exp. 12/31/17 CIVIL STATE OF CALIFORNIA

THE STATE OF CALIFORNIA OR ITS OFFICERS OR AGENTS SHALL NOT BE RESPONSIBLE FOR THE ACCURACY OR COMPLETENESS OF SCANNED COPIES OF THIS PLAN SHEET.

LIN CONSULTING, INC.
21660 E. COPLEY DRIVE
#270
DIAMOND BAR, CA 91765

CITY OF INDUSTRY
15651 E. STAFFORD STREET
CITY OF INDUSTRY, CA 91744

NOTES: (THIS SHEET ONLY)

1. FOR ACCURATE RIGHT OF WAY DATA, CONTACT RIGHT OF WAY ENGINEERING AT THE DISTRICT OFFICE.
2. FOR LEGEND AND ABBREVIATIONS SEE SHEET MODIFY COMMUNICATION SYSTEM (LEGEND, NOTE, ABBREVIATIONS).

EXISTING CONDUIT AND CABLE SCHEDULE (THIS SHEET ONLY)

CONDUCTOR TYPE	1					2	3	4	5	6	7	8	9	10	11	12
12SMFO CABLE	-	-	-	-	-	3+1(N)	3	2	1	1	1(N)	1(N)	1(N)	1(N)	1(N)	-
36SMFO CABLE	1	-	-	-	-	-	-	-	-	-	-	-	-	-	-	-
48SMFO CABLE	-	1	-	-	-	-	-	-	-	-	-	-	-	-	-	-
72SMFO CABLE	-	-	1	-	-	-	-	-	-	-	-	-	1(N)	1(N)	-	1(N)
INNERDUCT SIZE 1"	1	1	1	1	-	-	-	-	-	-	-	-	-	-	-	-
CONDUIT SIZE	4"				4"	3"	3"	3"	3"	2"	(N) 2"	(N) OH	(N) 3"	(N) OH	3"	(N) OH

(N) = NEW

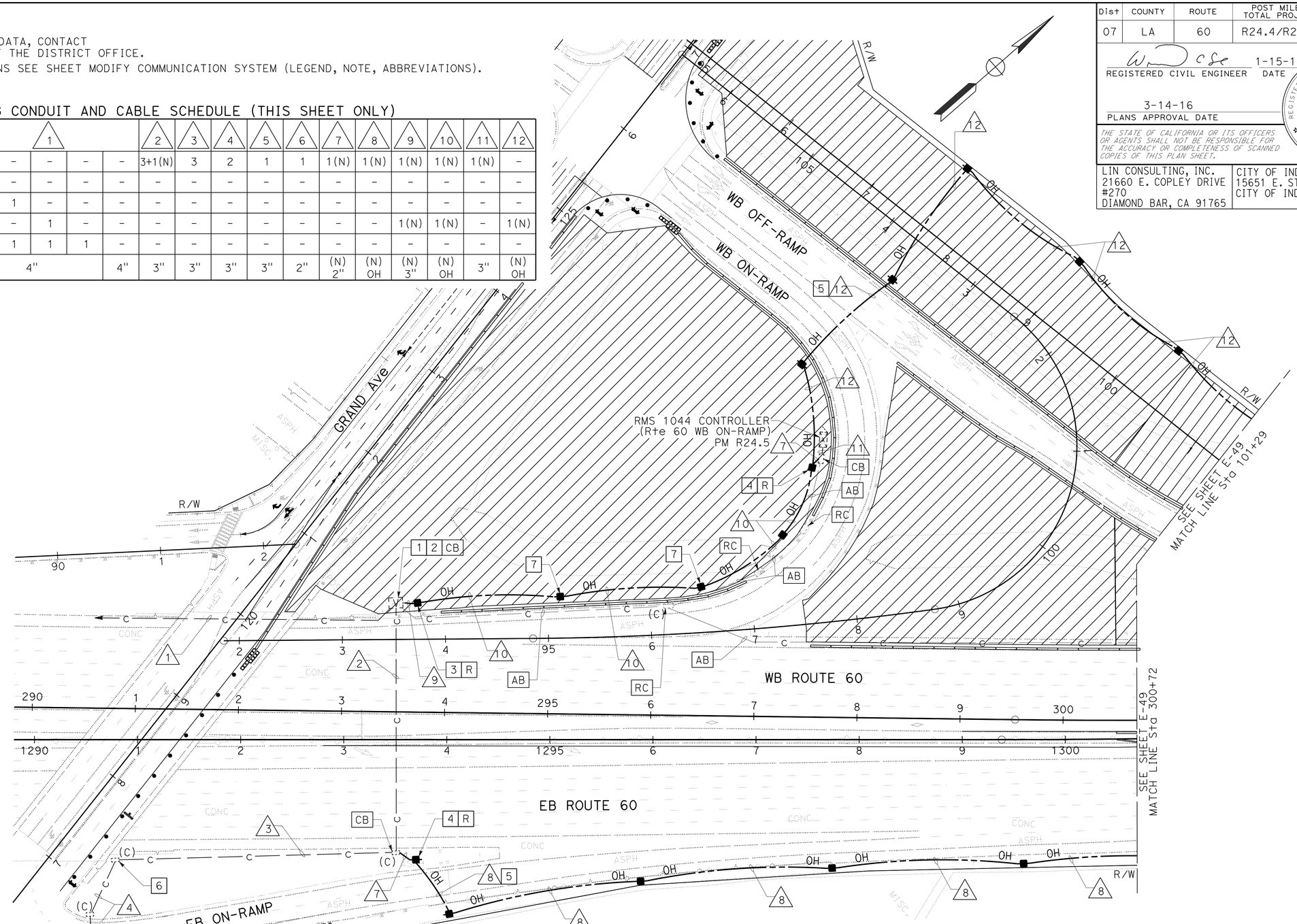

(MODIFYING FIBER OPTIC SYSTEM)
(TEMPORARY)
(STAGE 1A)

APPROVED FOR ELECTRICAL WORK ONLY

MODIFYING EXISTING ELECTRICAL SYSTEM

SCALE: 1" = 50'

E-48

STATE OF CALIFORNIA - DEPARTMENT OF TRANSPORTATION
Caltrans

CONSULTANT FUNCTIONAL SUPERVISOR: WILLIAM SUN
CALCULATED-DESIGNED BY: R. WOO
CHECKED BY: W. SUN
REVISED BY
DATE REVISED

LAST REVISION 00-00-00
DATE PLOTTED => 27-MAY-2016
TIME PLOTTED => 08:18

Dist	COUNTY	ROUTE	POST MILES TOTAL PROJECT	SHEET No.	TOTAL SHEETS
07	LA	60	R24.4/R25.3	251	384

REGISTERED CIVIL ENGINEER 1-15-16 DATE

3-14-16
PLANS APPROVAL DATE

REGISTERED PROFESSIONAL ENGINEER WILLIAM SUN No. 57664 Exp. 12/31/17 CIVIL STATE OF CALIFORNIA

THE STATE OF CALIFORNIA OR ITS OFFICERS OR AGENTS SHALL NOT BE RESPONSIBLE FOR THE ACCURACY OR COMPLETENESS OF SCANNED COPIES OF THIS PLAN SHEET.

LIN CONSULTING, INC.
21660 E. COPLEY DRIVE
#270
DIAMOND BAR, CA 91765

CITY OF INDUSTRY
15651 E. STAFFORD STREET
CITY OF INDUSTRY, CA 91744

NOTES: (THIS SHEET ONLY)

1. FOR ACCURATE RIGHT OF WAY DATA, CONTACT RIGHT OF WAY ENGINEERING AT THE DISTRICT OFFICE.
2. FOR LEGEND AND ABBREVIATIONS SEE SHEET MODIFY COMMUNICATION SYSTEM (LEGEND, NOTE, ABBREVIATIONS).

CONDUIT AND CABLE SCHEDULE (THIS SHEET ONLY)

CONDUCTOR TYPE	1	2	3	4	
12SMFO CABLE	-	1	1	1	
72SMFO CABLE	1	-	-	-	
CONDUIT SIZE	OH	OH	2"	(E) 4"	

(E) = EXISTING

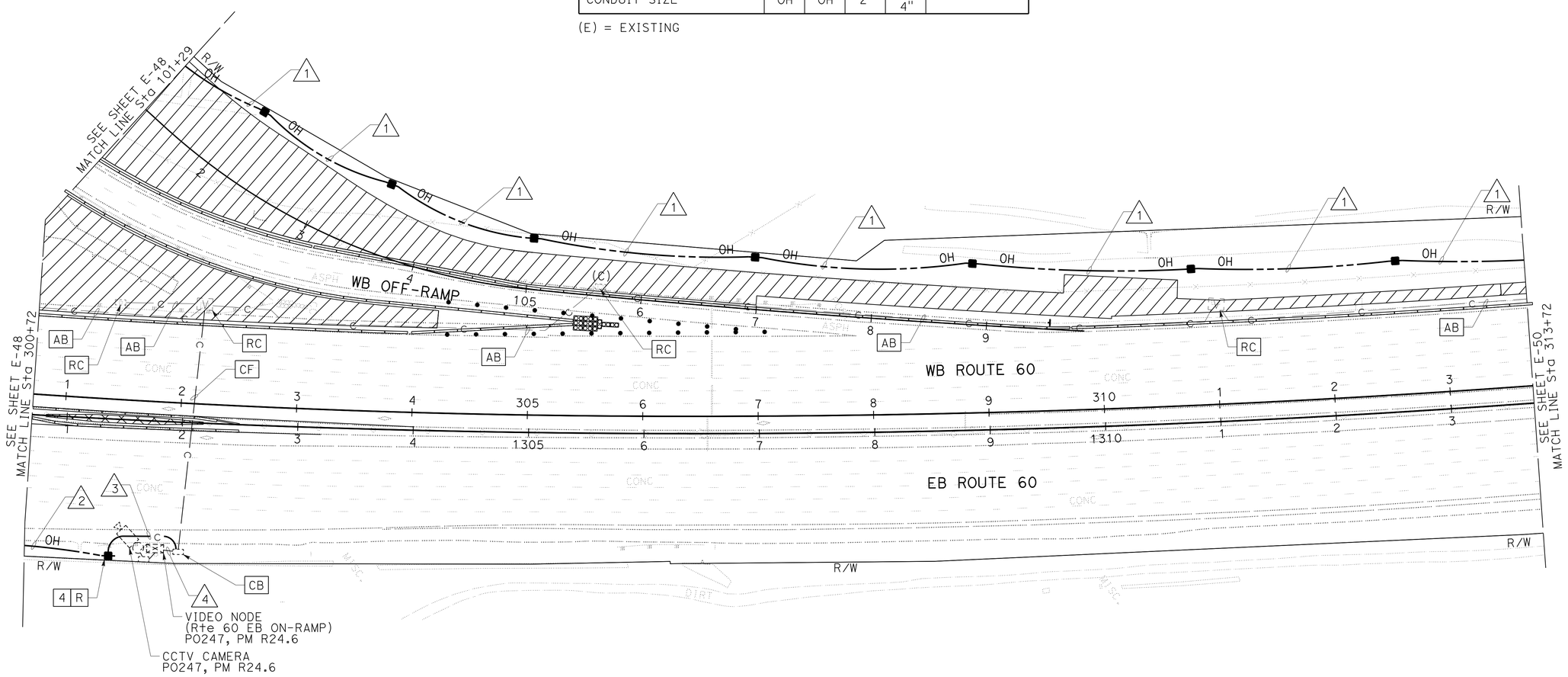

(MODIFYING FIBER OPTIC SYSTEM)
(TEMPORARY)
(STAGE 1A)

APPROVED FOR ELECTRICAL WORK ONLY

MODIFYING EXISTING ELECTRICAL SYSTEM

SCALE: 1" = 50'

E-49

STATE OF CALIFORNIA - DEPARTMENT OF TRANSPORTATION
Caltrans
DESIGN
CONSULTANT FUNCTIONAL SUPERVISOR: WILLIAM SUN
CALCULATED-DESIGNED BY: R. WOO
CHECKED BY: W. SUN
REVISED BY
DATE REVISED

LAST REVISION 00-00-00
DATE PLOTTED => 27-MAY-2016
TIME PLOTTED => 08:18

Dist	COUNTY	ROUTE	POST MILES TOTAL PROJECT	SHEET No.	TOTAL SHEETS
07	LA	60	R24.4/R25.3	252	384

REGISTERED CIVIL ENGINEER 1-15-16 DATE

3-14-16
PLANS APPROVAL DATE

REGISTERED PROFESSIONAL ENGINEER WILLIAM SUN No. 57664 Exp. 12/31/17 CIVIL STATE OF CALIFORNIA

THE STATE OF CALIFORNIA OR ITS OFFICERS OR AGENTS SHALL NOT BE RESPONSIBLE FOR THE ACCURACY OR COMPLETENESS OF SCANNED COPIES OF THIS PLAN SHEET.

LIN CONSULTING, INC.
21660 E. COPLEY DRIVE
#270
DIAMOND BAR, CA 91765

CITY OF INDUSTRY
15651 E. STAFFORD STREET
CITY OF INDUSTRY, CA 91744

NOTES: (THIS SHEET ONLY)

1. FOR ACCURATE RIGHT OF WAY DATA, CONTACT RIGHT OF WAY ENGINEERING AT THE DISTRICT OFFICE.
2. FOR LEGEND AND ABBREVIATIONS SEE SHEET MODIFY COMMUNICATION SYSTEM (LEGEND, NOTE, ABBREVIATIONS).

CONDUIT AND CABLE SCHEDULE (THIS SHEET ONLY)

CONDUCTOR TYPE	1
72SMFO CABLE	1
CONDUIT SIZE	OH

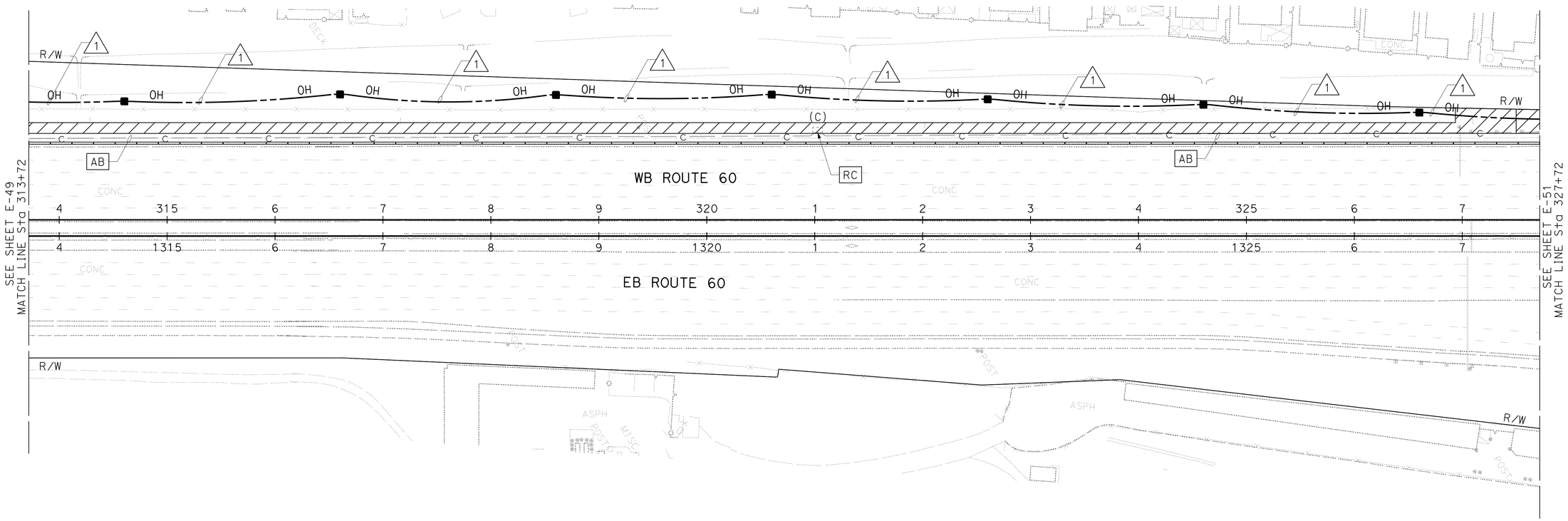

(MODIFYING FIBER OPTIC SYSTEM)
(TEMPORARY)
(STAGE 1A)

APPROVED FOR ELECTRICAL WORK ONLY

MODIFYING EXISTING ELECTRICAL SYSTEM

SCALE: 1" = 50'

E-50

STATE OF CALIFORNIA - DEPARTMENT OF TRANSPORTATION
Caltrans®
DESIGN

CONSULTANT FUNCTIONAL SUPERVISOR: WILLIAM SUN
CALCULATED-DESIGNED BY: R. WOO
CHECKED BY: W. SUN
REVISED BY
DATE REVISED

LAST REVISION 00-00-00
DATE PLOTTED => 27-MAY-2016
TIME PLOTTED => 08:18

Dist	COUNTY	ROUTE	POST MILES TOTAL PROJECT	SHEET No.	TOTAL SHEETS
07	LA	60	R24.4/R25.3	253	384

REGISTERED CIVIL ENGINEER 1-15-16 DATE

3-14-16
PLANS APPROVAL DATE

REGISTERED PROFESSIONAL ENGINEER WILLIAM SUN No. 57664 Exp. 12/31/17 CIVIL STATE OF CALIFORNIA

THE STATE OF CALIFORNIA OR ITS OFFICERS OR AGENTS SHALL NOT BE RESPONSIBLE FOR THE ACCURACY OR COMPLETENESS OF SCANNED COPIES OF THIS PLAN SHEET.

LIN CONSULTING, INC.
21660 E. COPLEY DRIVE
#270
DIAMOND BAR, CA 91765

CITY OF INDUSTRY
15651 E. STAFFORD STREET
CITY OF INDUSTRY, CA 91744

NOTES: (THIS SHEET ONLY)

1. FOR ACCURATE RIGHT OF WAY DATA, CONTACT RIGHT OF WAY ENGINEERING AT THE DISTRICT OFFICE.
2. FOR LEGEND AND ABBREVIATIONS SEE SHEET MODIFY COMMUNICATION SYSTEM (LEGEND, ABBREVIATIONS).

EXISTING CONDUIT AND CABLE SCHEDULE (THIS SHEET ONLY)

CONDUCTOR TYPE	1	2	3						4				
36SMFO CABLE	-	-	1	-	-	-	-	-	1	-	-	-	-
48SMFO CABLE	-	-	-	1	-	-	-	-	-	1	-	-	-
72SMFO CABLE	1(N)	1(N)	-	-	1	-	1(N)	-	-	-	1	-	-
INNERDUCT SIZE 1"	-	-	1	1	1	1	1	3	1	1	1	1	-
CONDUIT SIZE	(N) OH	(N) 3"	4"				4"		4"				4"

(N) = NEW

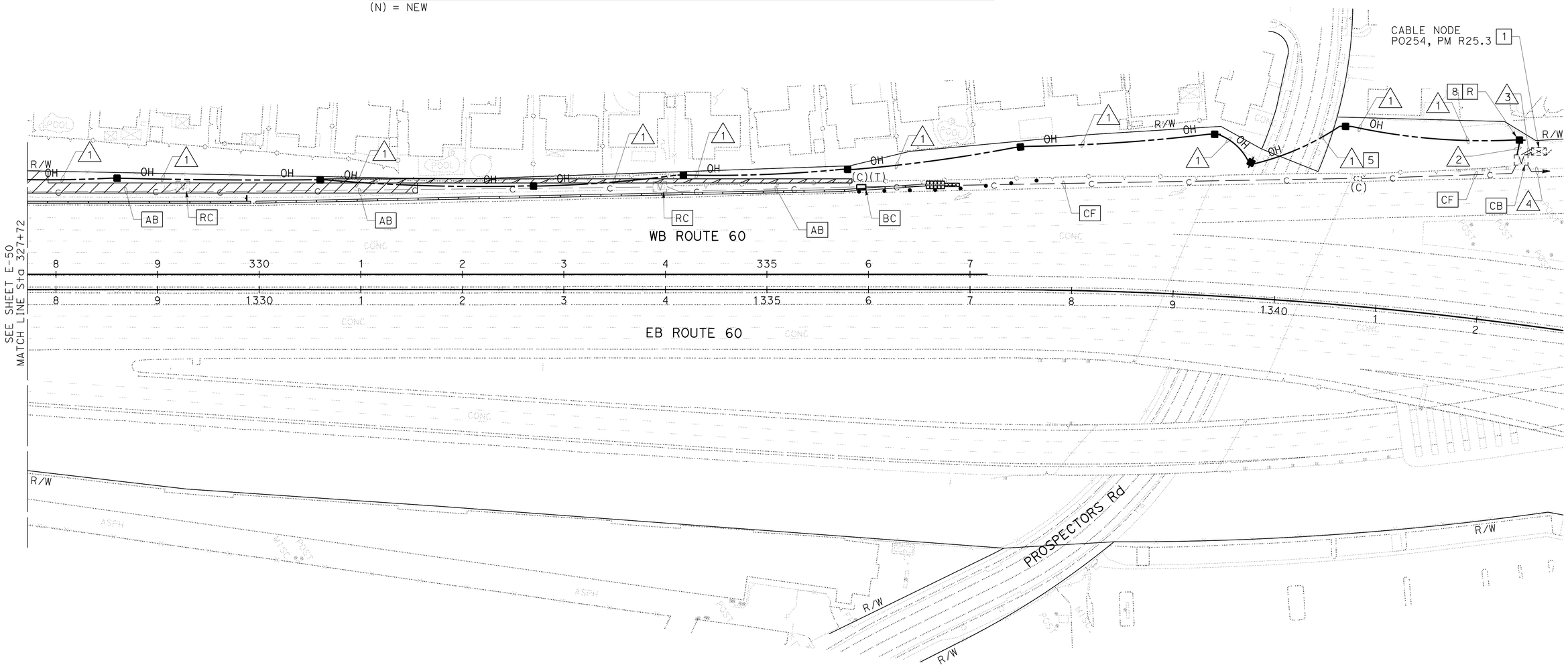

(MODIFYING FIBER OPTIC SYSTEM)
(TEMPORARY)
(STAGE 1A)

APPROVED FOR ELECTRICAL WORK ONLY

MODIFYING EXISTING ELECTRICAL SYSTEM

SCALE: 1" = 50'

E-51

STATE OF CALIFORNIA - DEPARTMENT OF TRANSPORTATION
Caltrans
DESIGN

CONSULTANT FUNCTIONAL SUPERVISOR: WILLIAM SUN
CALCULATED-DESIGNED BY: R. WOO
CHECKED BY: W. SUN
REVISED BY
DATE REVISED

LAST REVISION 00-00-00
DATE PLOTTED => 27-MAY-2016
TIME PLOTTED => 08:18

Dist	COUNTY	ROUTE	POST MILES TOTAL PROJECT	SHEET No.	TOTAL SHEETS
07	LA	60	R24.4/R25.3	254	384

REGISTERED CIVIL ENGINEER 1-15-16 DATE

3-14-16
PLANS APPROVAL DATE

REGISTERED PROFESSIONAL ENGINEER WILLIAM SUN No. 57664 Exp. 12/31/17 CIVIL STATE OF CALIFORNIA

THE STATE OF CALIFORNIA OR ITS OFFICERS OR AGENTS SHALL NOT BE RESPONSIBLE FOR THE ACCURACY OR COMPLETENESS OF SCANNED COPIES OF THIS PLAN SHEET.

LIN CONSULTING, INC.
21660 E. COPLEY DRIVE
#270
DIAMOND BAR, CA 91765

CITY OF INDUSTRY
15651 E. STAFFORD STREET
CITY OF INDUSTRY, CA 91744

NOTES: (THIS SHEET ONLY)

1. FOR ACCURATE RIGHT OF WAY DATA, CONTACT RIGHT OF WAY ENGINEERING AT THE DISTRICT OFFICE.
2. FOR LEGEND AND ABBREVIATIONS SEE SHEET MODIFY COMMUNICATION SYSTEM (LEGEND, NOTE, ABBREVIATIONS).

EXISTING CONDUIT AND CABLE SCHEDULE (THIS SHEET ONLY)

CONDUCTOR TYPE	1					2	3	4	5	6					7	8	9				
12SMFO CABLE	-	-	-	-	-	3	2	1	1	-	-	-	-	-	1(N)	1(N)	-	-	-	-	-
36SMFO CABLE	1	-	-	-	-	-	-	-	-	1(N)	-	-	-	-	-	-	1(N)	-	-	-	-
48SMFO CABLE	-	1	-	-	-	-	-	-	-	-	1(N)	-	-	-	-	-	-	1(N)	-	-	-
72SMFO CABLE	-	-	1	-	-	-	-	-	-	-	-	1(N)	-	-	-	-	-	-	1(N)	-	-
PULL TAPE	-	-	-	-	-	-	-	-	-	-	-	-	1(N)	1(N)	-	-	-	-	-	1(N)	1(N)
TRACER WIRE	-				-	-	-	-	-	1(N)				-	-	-	1(N)				-
INNERDUCT SIZE 1"	1	1	1	1	-	-	-	-	-	1(N)	1(N)	1(N)	1(N)	-	-	-	1(N)	1(N)	1(N)	1(N)	-
CONDUIT SIZE	4"				4"	3"	3"	3"	2"	4"(N)				(N) 4"	(N) 3"	(N) 2"	4"(N)				(N) 4"

(N) = NEW

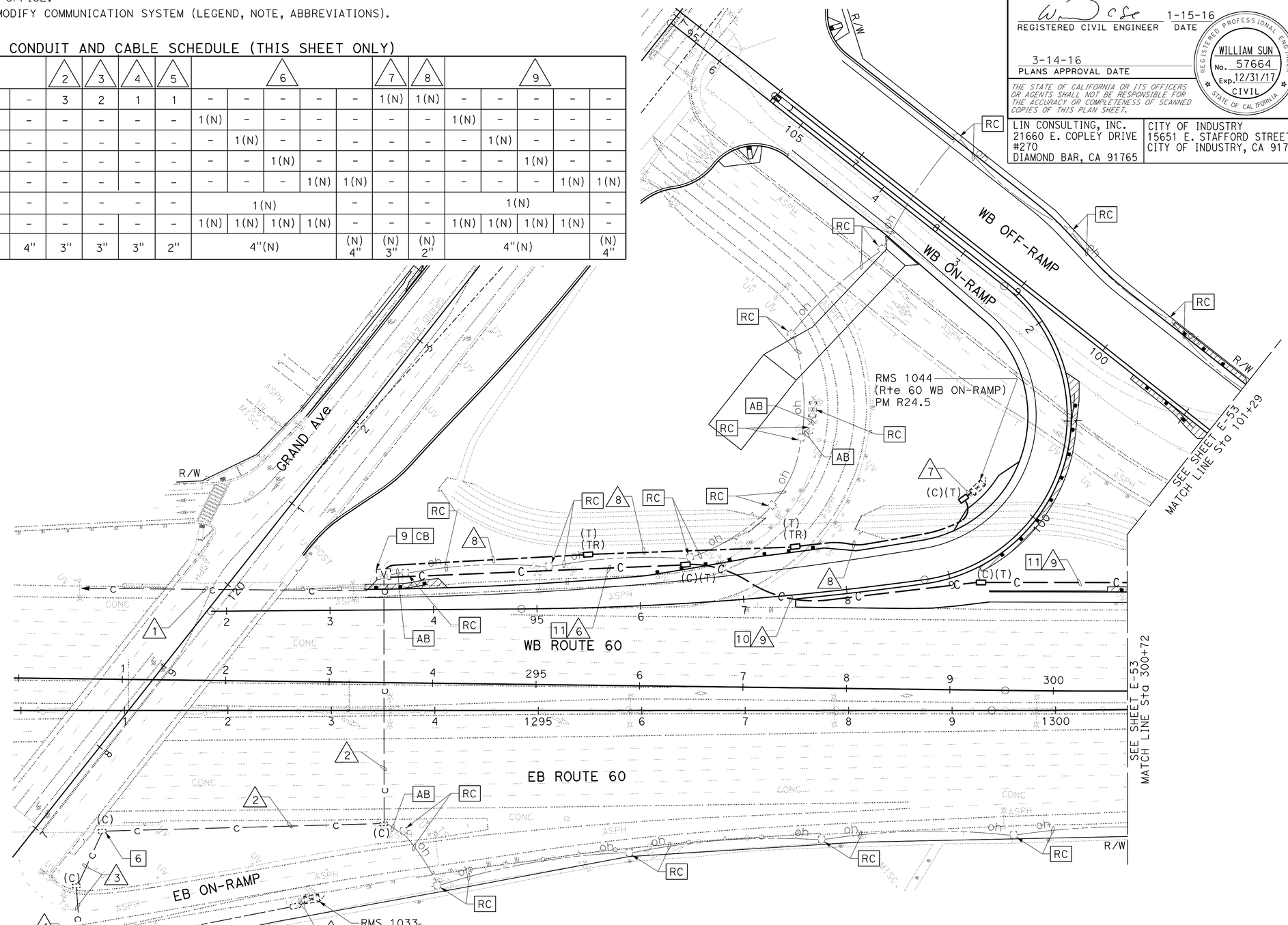

(MODIFYING FIBER OPTIC SYSTEM)

APPROVED FOR ELECTRICAL WORK ONLY

MODIFYING EXISTING ELECTRICAL SYSTEM

SCALE: 1" = 50'

E-52

STATE OF CALIFORNIA - DEPARTMENT OF TRANSPORTATION
Caltrans®
DESIGN

CONSULTANT FUNCTIONAL SUPERVISOR: WILLIAM SUN
CALCULATED-DESIGNED BY: R. WOO
CHECKED BY: W. SUN
REVISED BY
DATE REVISED

LAST REVISION 00-00-00
DATE PLOTTED => 27-MAY-2016
TIME PLOTTED => 08:18

Dist	COUNTY	ROUTE	POST MILES TOTAL PROJECT	SHEET No.	TOTAL SHEETS
07	LA	60	R24.4/R25.3	255	384

REGISTERED CIVIL ENGINEER — DATE 1-15-16

3-14-16
PLANS APPROVAL DATE

REGISTERED PROFESSIONAL ENGINEER — WILLIAM SUN — No. 57664 — Exp. 12/31/17 — CIVIL — STATE OF CALIFORNIA

THE STATE OF CALIFORNIA OR ITS OFFICERS OR AGENTS SHALL NOT BE RESPONSIBLE FOR THE ACCURACY OR COMPLETENESS OF SCANNED COPIES OF THIS PLAN SHEET.

LIN CONSULTING, INC.
21660 E. COPLEY DRIVE
#270
DIAMOND BAR, CA 91765

CITY OF INDUSTRY
15651 E. STAFFORD STREET
CITY OF INDUSTRY, CA 91744

NOTES: (THIS SHEET ONLY)

1. FOR ACCURATE RIGHT OF WAY DATA, CONTACT RIGHT OF WAY ENGINEERING AT THE DISTRICT OFFICE.
2. FOR LEGEND AND ABBREVIATIONS SEE SHEET MODIFY COMMUNICATION SYSTEM (LEGEND, NOTE, ABBREVIATIONS).

EXISTING CONDUIT AND CABLE SCHEDULE (THIS SHEET ONLY)

CONDUCTOR TYPE	1					2	3			4			5
12SMFO CABLE	-	-	-	-	-	1(N)	-	1(N)	-	-	1(N)	-	1(N)
36SMFO CABLE	1(N)	-	-	-	-	-	-	-	-	-	-	-	-
48SMFO CABLE	-	1(N)	-	-	-	-	-	-	-	-	-	-	-
72SMFO CABLE	-	-	1(N)	-	-	-	-	-	-	-	-	-	-
PULL TAPE	-	-	-	1(N)	1(N)	-	-	-	-	-	-	-	-
TRACER WIRE	1(N)				-	-	1(N)			1(N)			-
INNERDUCT SIZE 1"	1(N)	1(N)	1(N)	1(N)	-	-	1(N)	1(N)	1(N)	1(N)	1(N)	1(N)	-
CONDUIT SIZE	4"(N)				(N) 4"	(N) 3"	(N) 4"			4"			4"

(N) = NEW

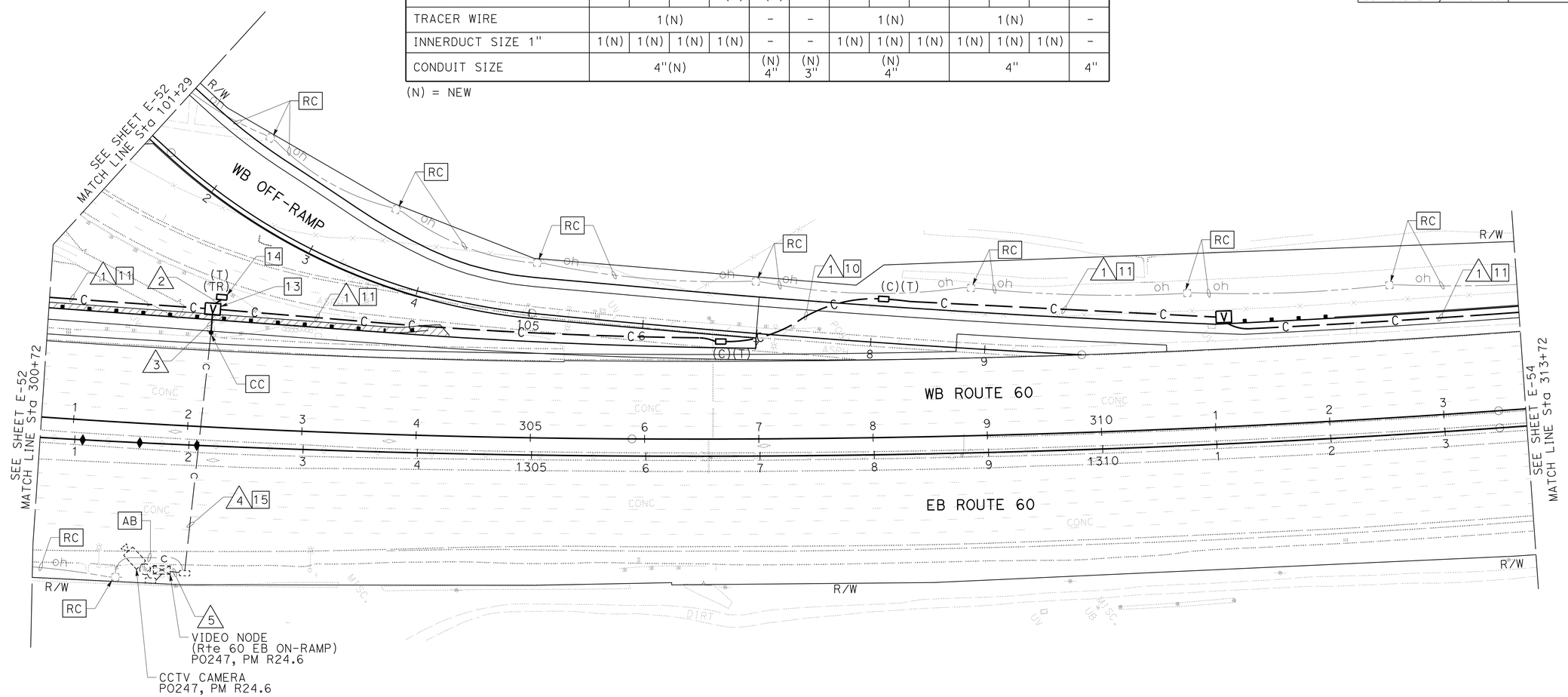

MODIFYING EXISTING ELECTRICAL SYSTEM

SCALE: 1" = 50'

(MODIFYING FIBER OPTIC SYSTEM)

APPROVED FOR ELECTRICAL WORK ONLY

E-53

STATE OF CALIFORNIA - DEPARTMENT OF TRANSPORTATION
DESIGN
Caltrans
CONSULTANT FUNCTIONAL SUPERVISOR: WILLIAM SUN
CALCULATED-DESIGNED BY: W. SUN
CHECKED BY: R. WOO
REVISED BY
DATE REVISED

LAST REVISION 00-00-00
DATE PLOTTED => 27-MAY-2016
TIME PLOTTED => 08:18

Dist	COUNTY	ROUTE	POST MILES TOTAL PROJECT	SHEET No.	TOTAL SHEETS
07	LA	60	R24.4/R25.3	256	384

REGISTERED CIVIL ENGINEER 1-15-16 DATE

3-14-16
PLANS APPROVAL DATE

REGISTERED PROFESSIONAL ENGINEER WILLIAM SUN No. 57664 Exp. 12/31/17 CIVIL STATE OF CALIFORNIA

THE STATE OF CALIFORNIA OR ITS OFFICERS OR AGENTS SHALL NOT BE RESPONSIBLE FOR THE ACCURACY OR COMPLETENESS OF SCANNED COPIES OF THIS PLAN SHEET.

LIN CONSULTING, INC.
21660 E. COPLEY DRIVE
#270
DIAMOND BAR, CA 91765

CITY OF INDUSTRY
15651 E. STAFFORD STREET
CITY OF INDUSTRY, CA 91744

NOTES: (THIS SHEET ONLY)

1. FOR ACCURATE RIGHT OF WAY DATA, CONTACT RIGHT OF WAY ENGINEERING AT THE DISTRICT OFFICE.
2. FOR LEGEND AND ABBREVIATIONS SEE SHEET MODIFY COMMUNICATION SYSTEM (LEGEND, NOTE, ABBREVIATIONS).

EXISTING CONDUIT AND CABLE SCHEDULE (THIS SHEET ONLY)

CONDUCTOR TYPE	1				
36SMFO CABLE	1(N)	-	-	-	-
48SMFO CABLE	-	1(N)	-	-	-
72SMFO CABLE	-	-	1(N)	-	-
PULL TAPE	-	-	-	1(N)	1(N)
TRACER WIRE	1(N)				-
INNERDUCT SIZE 1"	1(N)	1(N)	1(N)	1(N)	-
CONDUIT SIZE	4"(N)				(N) 4"

(N) = NEW

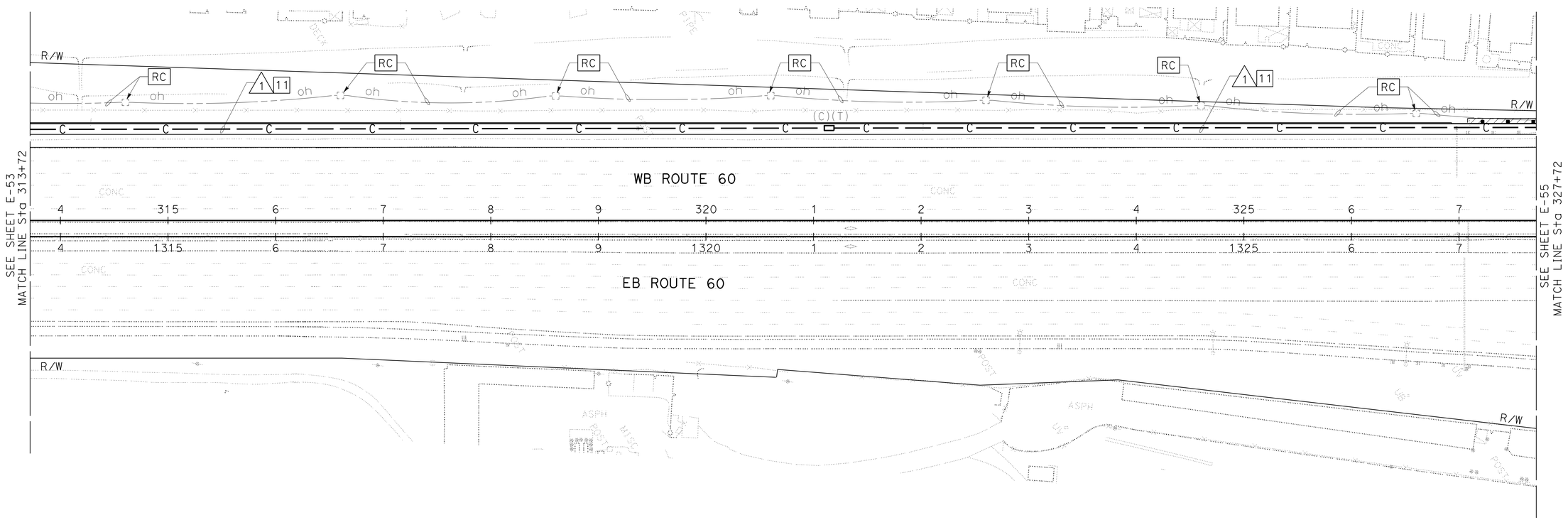

MODIFYING EXISTING ELECTRICAL SYSTEM

(MODIFYING FIBER OPTIC SYSTEM)

SCALE: 1" = 50'

APPROVED FOR ELECTRICAL WORK ONLY

E-54

STATE OF CALIFORNIA - DEPARTMENT OF TRANSPORTATION
Caltrans
DESIGN

CONSULTANT FUNCTIONAL SUPERVISOR: WILLIAM SUN
CALCULATED-DESIGNED BY: R. WOO
CHECKED BY: W. SUN
REVISED BY
DATE REVISED

LAST REVISION 00-00-00
DATE PLOTTED => 27-MAY-2016
TIME PLOTTED => 08:18

Dist	COUNTY	ROUTE	POST MILES TOTAL PROJECT	SHEET No.	TOTAL SHEETS
07	LA	60	R24.4/R25.3	257	384

REGISTERED CIVIL ENGINEER — DATE 1-15-16

3-14-16
PLANS APPROVAL DATE

REGISTERED PROFESSIONAL ENGINEER — WILLIAM SUN No. 57664 Exp. 12/31/17 CIVIL — STATE OF CALIFORNIA

THE STATE OF CALIFORNIA OR ITS OFFICERS OR AGENTS SHALL NOT BE RESPONSIBLE FOR THE ACCURACY OR COMPLETENESS OF SCANNED COPIES OF THIS PLAN SHEET.

LIN CONSULTING, INC.
21660 E. COPLEY DRIVE
#270
DIAMOND BAR, CA 91765

CITY OF INDUSTRY
15651 E. STAFFORD STREET
CITY OF INDUSTRY, CA 91744

NOTES: (THIS SHEET ONLY)

1. FOR ACCURATE RIGHT OF WAY DATA, CONTACT RIGHT OF WAY ENGINEERING AT THE DISTRICT OFFICE.
2. FOR LEGEND AND ABBREVIATIONS SEE SHEET MODIFY COMMUNICATION SYSTEM (LEGEND, NOTE, ABBREVIATIONS).

EXISTING CONDUIT AND CABLE SCHEDULE (THIS SHEET ONLY)

CONDUCTOR TYPE	1					2					3								4				
36SMFO CABLE	1(N)	-	-	-	-	1(N)	-	-	-	-	1	-	-	-	1(N)	-	-	-	1	-	-	-	-
48SMFO CABLE	-	1(N)	-	-	-	-	1(N)	-	-	-	-	1	-	-	-	1(N)	-	-	-	1	-	-	-
72SMFO CABLE	-	-	1(N)	-	-	-	-	1(N)	-	-	-	-	1	-	-	-	1(N)	-	-	-	1	-	-
PULL TAPE	-	-	-	1(N)	1(N)	-	-	-	-	-	-	-	-	-	-	-	-	-	-	-	-	-	-
TRACER WIRE	1(N)				-	1(N)				-	-				-				1				-
INNERDUCT SIZE 1"	1(N)	1(N)	1(N)	1(N)	-	1	1	1	1	-	1	1	1	1	1	1	1	1	1	1	1	1	-
CONDUIT SIZE	4"(N)				(N) 4"	4"				4"	4"				4"				4"				4"

(N) = NEW

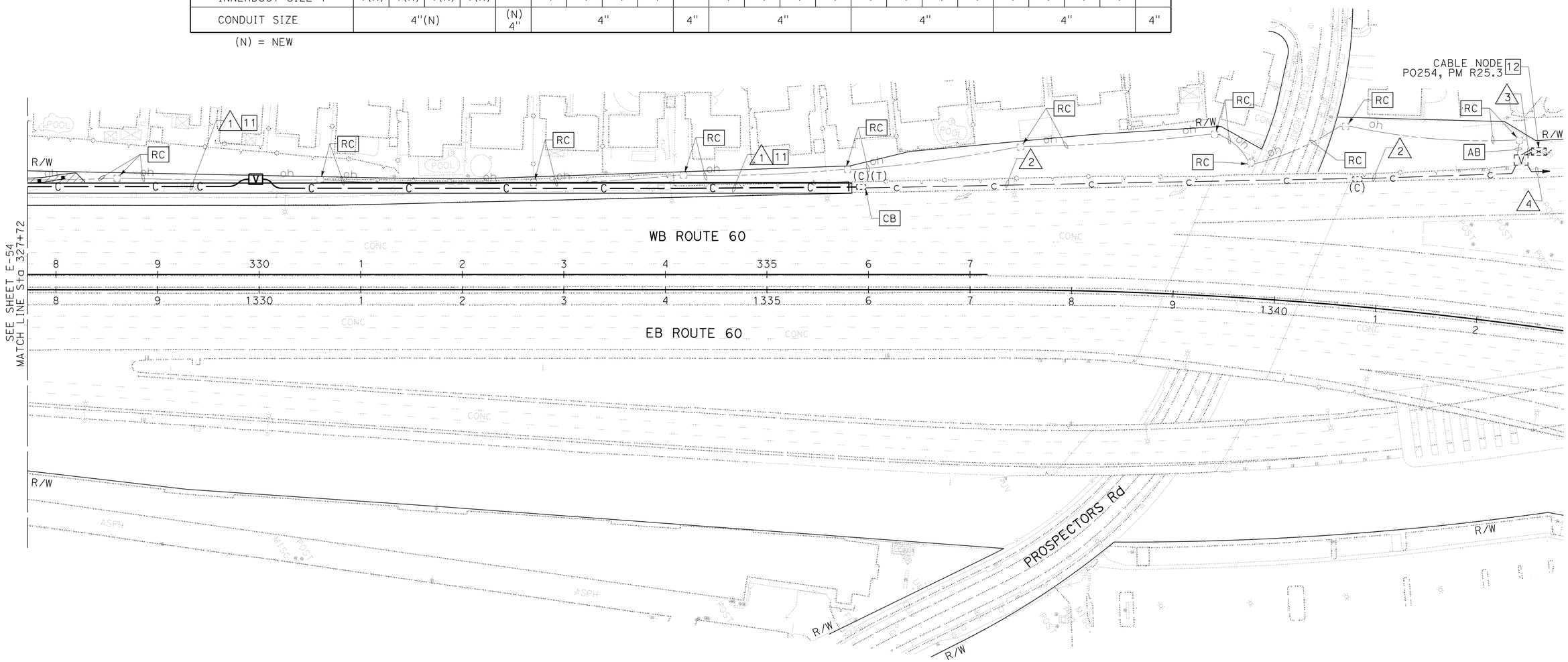

MODIFYING EXISTING ELECTRICAL SYSTEM

(MODIFYING FIBER OPTIC SYSTEM)

APPROVED FOR ELECTRICAL WORK ONLY

SCALE: 1" = 50'

E-55

STATE OF CALIFORNIA - DEPARTMENT OF TRANSPORTATION
Caltrans
DESIGN
CONSULTANT FUNCTIONAL SUPERVISOR: WILLIAM SUN
CALCULATED-DESIGNED BY: R. WOO
CHECKED BY: W. SUN
REVISED BY
DATE REVISED

LAST REVISION 00-00-00
DATE PLOTTED => 27-MAY-2016
TIME PLOTTED => 08:18

Dist	COUNTY	ROUTE	POST MILES TOTAL PROJECT	SHEET No.	TOTAL SHEETS
07	LA	60	R24.4/R25.3	258	384

REGISTERED CIVIL ENGINEER 1-15-16 DATE

3-14-16
PLANS APPROVAL DATE

REGISTERED PROFESSIONAL ENGINEER WILLIAM SUN No. 57664 Exp. 12/31/17 CIVIL STATE OF CALIFORNIA

THE STATE OF CALIFORNIA OR ITS OFFICERS OR AGENTS SHALL NOT BE RESPONSIBLE FOR THE ACCURACY OR COMPLETENESS OF SCANNED COPIES OF THIS PLAN SHEET.

LIN CONSULTING, INC.
21660 E. COPLEY DRIVE
#270
DIAMOND BAR, CA 91765

CITY OF INDUSTRY
15651 E. STAFFORD STREET
CITY OF INDUSTRY, CA 91744

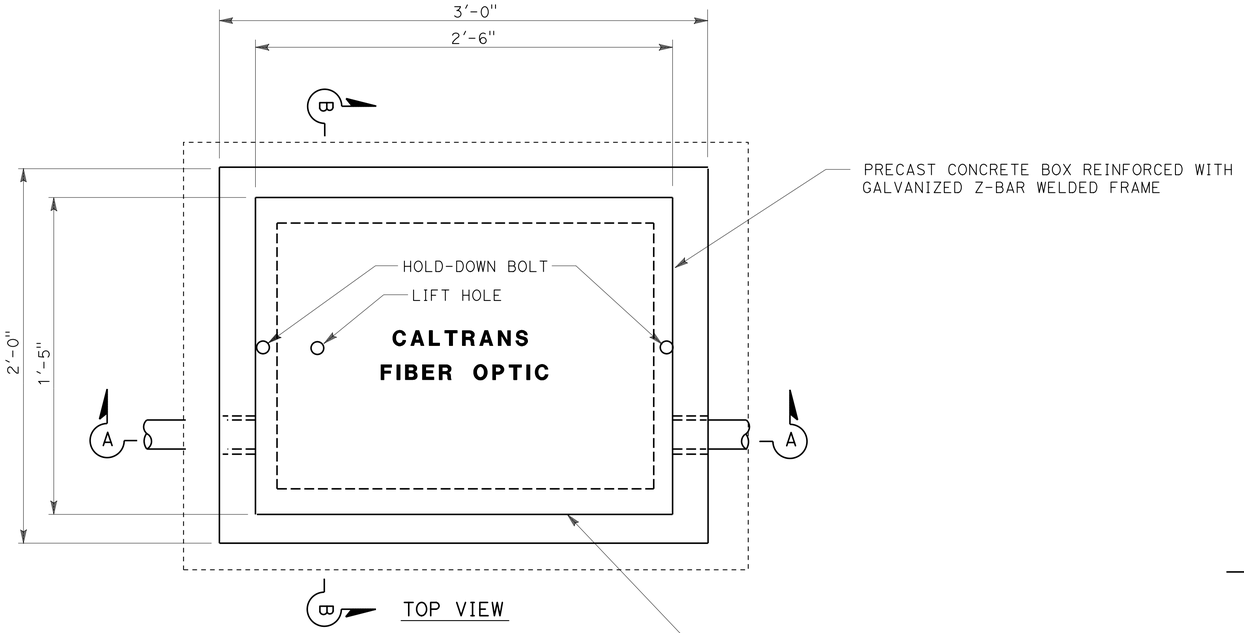

TOP VIEW

NOTES: (THIS SHEET ONLY)

1. FOR DETAILS NOT SHOWN SEE Std PLAN RSP ES-8B.
2. CONDUITS SHOWN ARE FOR EXAMPLE ONLY. ADDITIONAL CONDUITS MAY BE REQURIED AS SHOWN.
3. SEE SPECIAL PROVISIONS REGARDING HOLD-DOWN BOLTS FOR TRAFFIC COVERS.

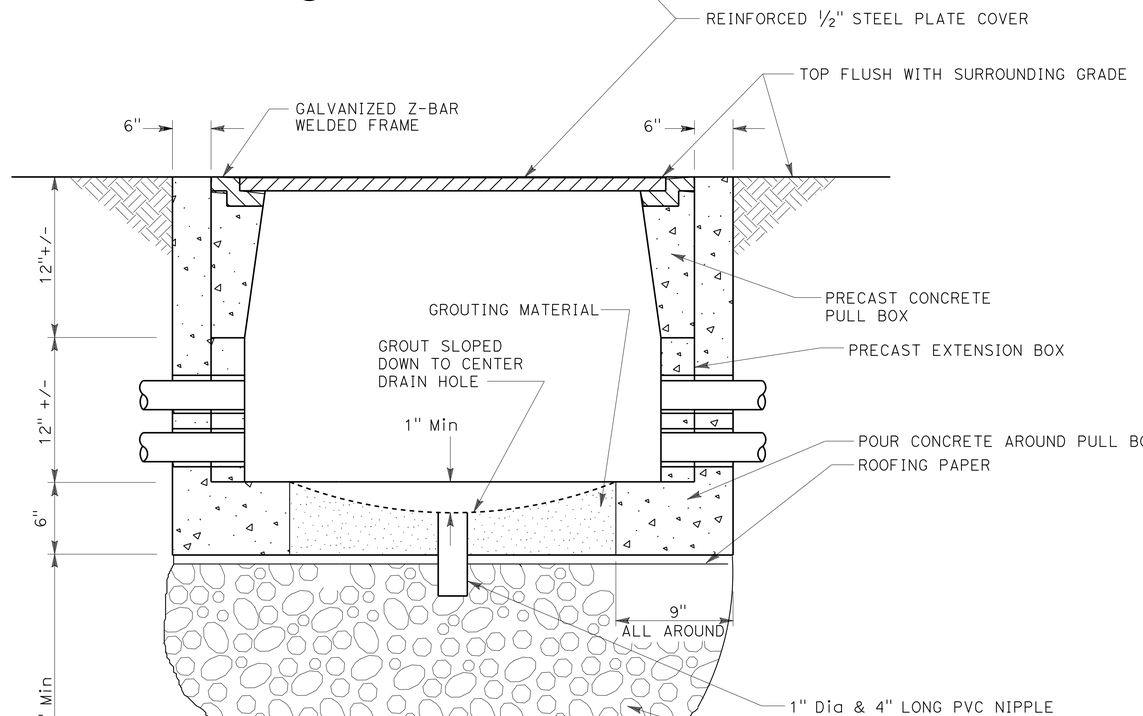

SECTION A-A

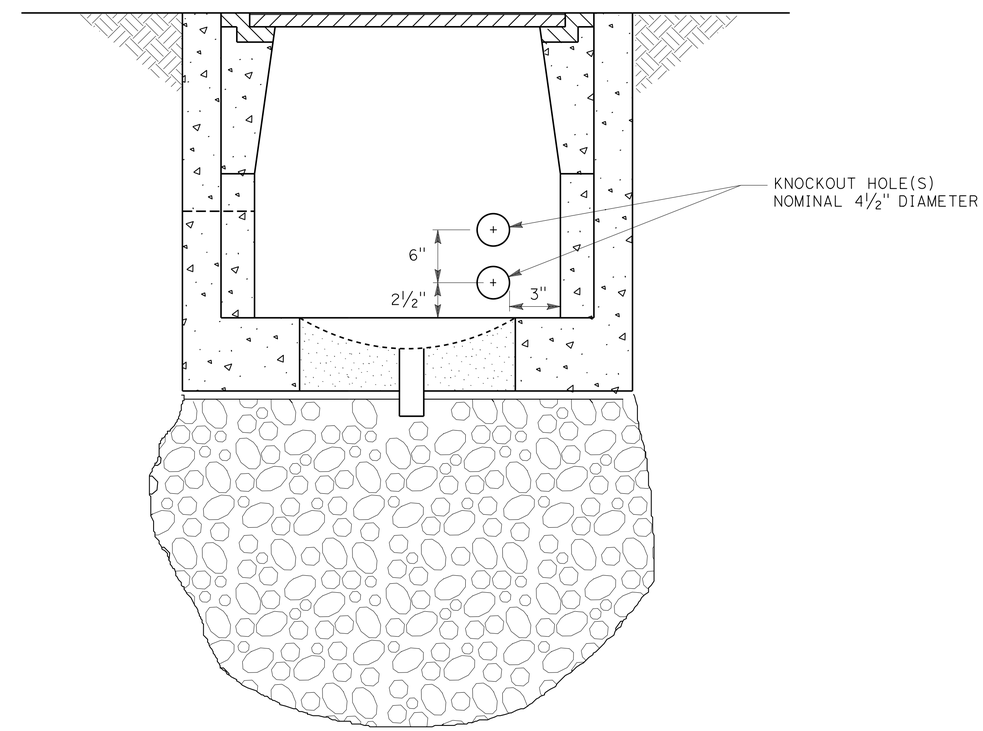

SECTION B-B

(MODIFYING FIBER OPTIC SYSTEM)
(COMMUNICATION PULL BOX DETAILS)

ELECTRICAL DETAILS

NO SCALE

E-56

STATE OF CALIFORNIA - DEPARTMENT OF TRANSPORTATION
Caltrans® DESIGN

CONSULTANT FUNCTIONAL SUPERVISOR: WILLIAM SUN
CALCULATED-DESIGNED BY: R. WOO
CHECKED BY: W. SUN
REVISED BY
DATE REVISED

LAST REVISION 00-00-00
DATE PLOTTED => 27-MAY-2016
TIME PLOTTED => 08:18

Dist	COUNTY	ROUTE	POST MILES TOTAL PROJECT	SHEET No.	TOTAL SHEETS
07	LA	60	R24.4/R25.3	259	384

REGISTERED CIVIL ENGINEER 1-15-16 DATE

3-14-16
PLANS APPROVAL DATE

REGISTERED PROFESSIONAL ENGINEER WILLIAM SUN No. 57664 Exp. 12/31/17 CIVIL STATE OF CALIFORNIA

THE STATE OF CALIFORNIA OR ITS OFFICERS OR AGENTS SHALL NOT BE RESPONSIBLE FOR THE ACCURACY OR COMPLETENESS OF SCANNED COPIES OF THIS PLAN SHEET.

LIN CONSULTING, INC.
21660 E. COPLEY DRIVE
#270
DIAMOND BAR, CA 91765

CITY OF INDUSTRY
15651 E. STAFFORD STREET
CITY OF INDUSTRY, CA 91744

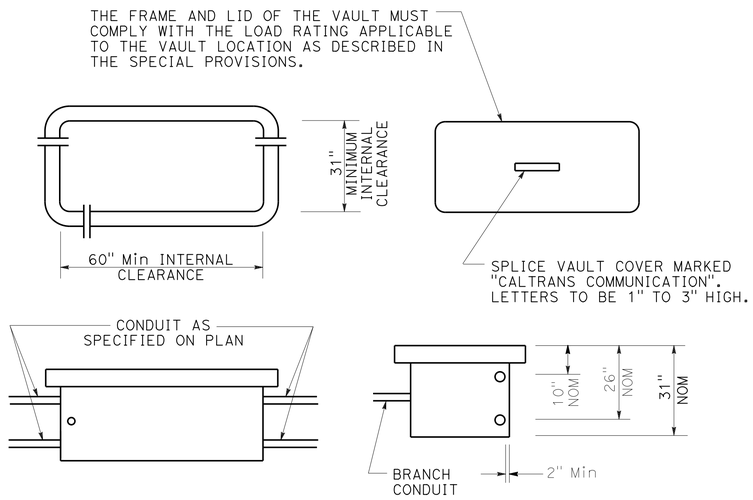

SPLICE VAULT DIMENSIONS

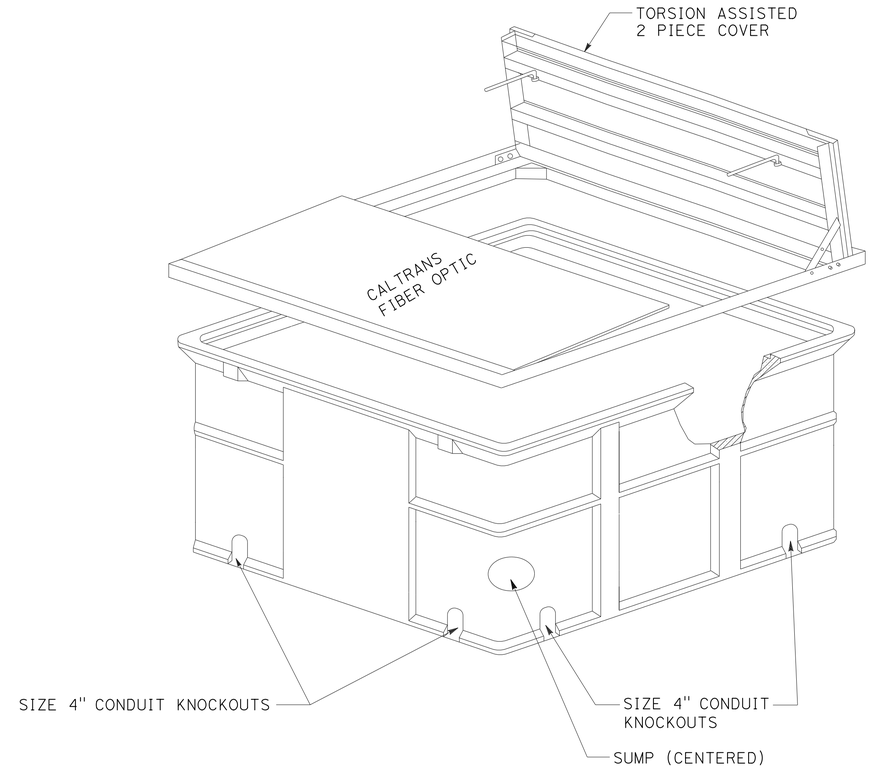

SPLICE VAULT

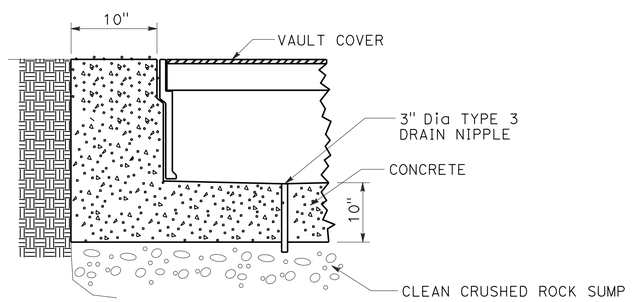

DETAIL "A"
INSTALLATION IN ASPHALT PAVEMENT

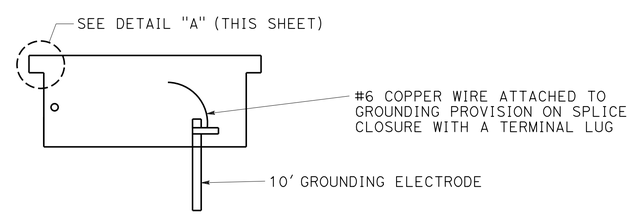

SPLICE VAULT INSTALLATION

NOTES: (THIS SHEET ONLY)

1. CONCRETE ENCASEMENT AROUND SPLICE VAULT MUST BE MINOR CONCRETE.
2. PAVEMENT AND SUBGRADE TO BE AS DIRECTED BY THE ENGINEER.

(MODIFYING FIBER OPTIC SYSTEM)
(SPLICE VAULT DETAILS)

ELECTRICAL DETAILS

NO SCALE

E-57

STATE OF CALIFORNIA - DEPARTMENT OF TRANSPORTATION
Caltrans
DESIGN
CONSULTANT FUNCTIONAL SUPERVISOR: WILLIAM SUN
CALCULATED-DESIGNED BY: R. WOO
CHECKED BY: W. SUN
REVISED BY
DATE REVISED

LAST REVISION 00-00-00
DATE PLOTTED => 27-MAY-2016
TIME PLOTTED => 08:18

Dist	COUNTY	ROUTE	POST MILES TOTAL PROJECT	SHEET No.	TOTAL SHEETS
07	LA	60	R24.4/R25.3	260	384

REGISTERED CIVIL ENGINEER 1-15-16 DATE

3-14-16
PLANS APPROVAL DATE

REGISTERED PROFESSIONAL ENGINEER WILLIAM SUN No. 57664 Exp. 12/31/17 CIVIL STATE OF CALIFORNIA

THE STATE OF CALIFORNIA OR ITS OFFICERS OR AGENTS SHALL NOT BE RESPONSIBLE FOR THE ACCURACY OR COMPLETENESS OF SCANNED COPIES OF THIS PLAN SHEET.

LIN CONSULTING, INC.
21660 E. COPLEY DRIVE
#270
DIAMOND BAR, CA 91765

CITY OF INDUSTRY
15651 E. STAFFORD STREET
CITY OF INDUSTRY, CA 91744

NOTES: (THIS SHEET ONLY)

1. JACKED COMMUNICATION CONDUITS MUST BE 30" MINIMUM BELOW FINISHED GRADE.
2. PLACE COMMUNICATION PULL BOXES OR SPLICE VAULTS AS SHOWN.
3. BENDS MUST BE FACTORY BENDS.
4. BEND ANGLES AND CONDUIT DIRECTION VARY AS SHOWN.

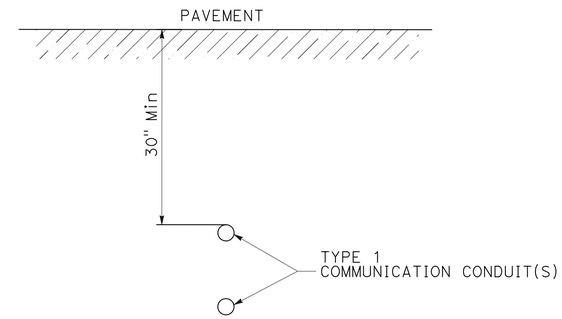

SECTION A-A

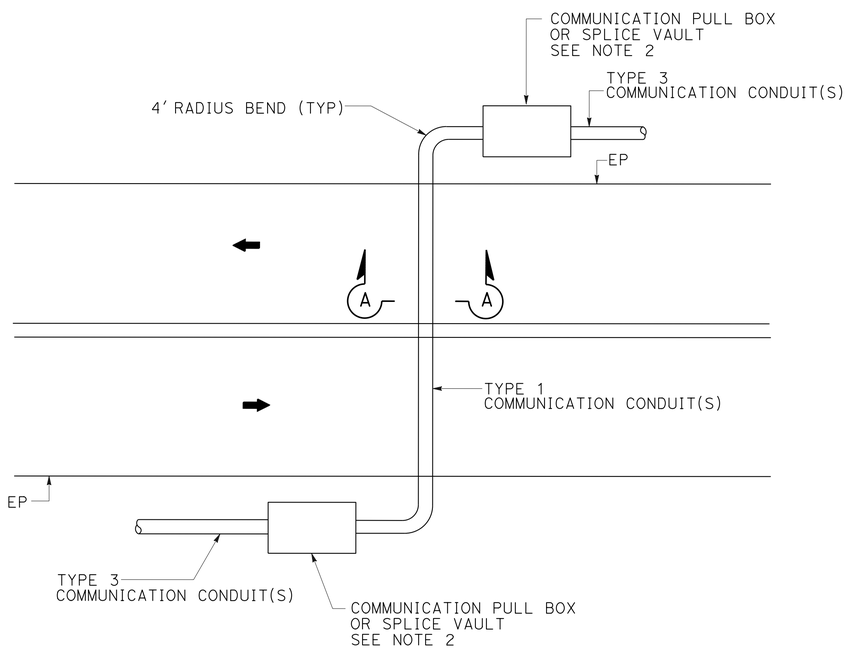

TYPICAL MAINLINE CROSSING (4 OR MORE LANES)

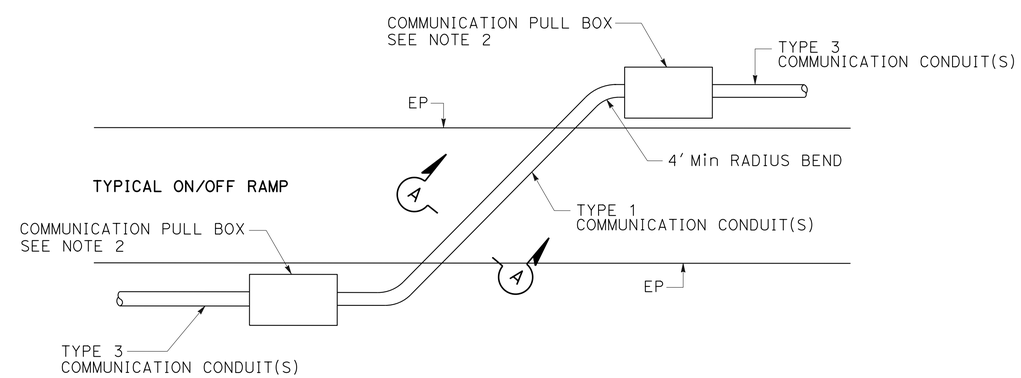

TYPICAL ON/OFF RAMP CROSSING

(MODIFYING FIBER OPTIC SYSTEM)
(CONSTRUCTION DETAILS)

ELECTRICAL DETAILS

NO SCALE

E-58

STATE OF CALIFORNIA - DEPARTMENT OF TRANSPORTATION
Caltrans
DESIGN

CONSULTANT FUNCTIONAL SUPERVISOR: WILLIAM SUN
CALCULATED-DESIGNED BY: R. WOO
CHECKED BY: W. SUN
REVISED BY
DATE REVISED

LAST REVISION 00-00-00
DATE PLOTTED => 27-MAY-2016
TIME PLOTTED => 08:18

Dist	COUNTY	ROUTE	POST MILES TOTAL PROJECT	SHEET No.	TOTAL SHEETS
07	LA	60	R24.4/R25.3	261	384

REGISTERED CIVIL ENGINEER 1-15-16 DATE

3-14-16
PLANS APPROVAL DATE

REGISTERED PROFESSIONAL ENGINEER WILLIAM SUN No. 57664 Exp. 12/31/17 CIVIL STATE OF CALIFORNIA

THE STATE OF CALIFORNIA OR ITS OFFICERS OR AGENTS SHALL NOT BE RESPONSIBLE FOR THE ACCURACY OR COMPLETENESS OF SCANNED COPIES OF THIS PLAN SHEET.

LIN CONSULTING, INC.
21660 E. COPLEY DRIVE
#270
DIAMOND BAR, CA 91765

CITY OF INDUSTRY
15651 E. STAFFORD STREET
CITY OF INDUSTRY, CA 91744

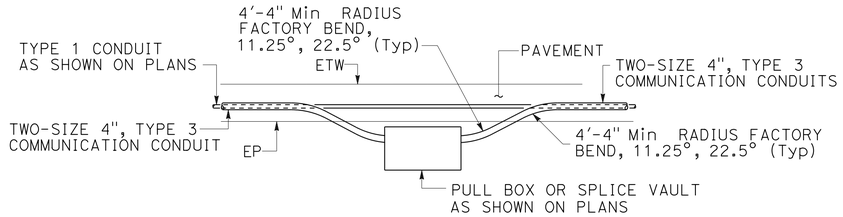

OUTSIDE SHOULDER PULL BOX INSTALLATION (TOP VIEW)

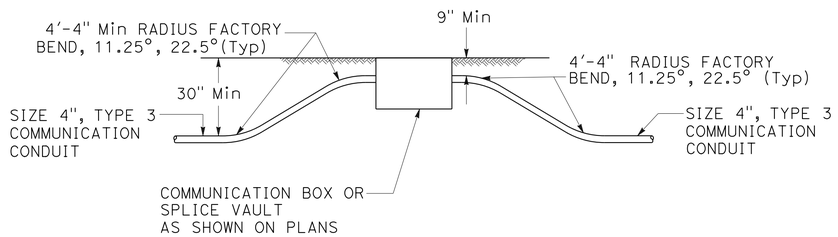

PULL BOX FOR SOIL AREA TRENCHING (ELEVATION)

NOTES: (THIS SHEET ONLY)

1. REPLACE AC DIKE IN KIND, AS NECESSARY.
2. TRENCH TO BE CENTERED IN SHOULDER OR AS DIRECTED BY ENGINEER.
3. MAINTAIN 24" MINIMUM COVER AND BACKFILL TRENCH WITH SLURRY CEMENT BETWEEN PULL BOX AND PAVED SHOULDER.
4. WHERE TRENCH TRANSITIONS FROM ASPHALT TO UNPAVED AREA, EXCEPT AT PULL BOXES, CONDUIT TO GRADUALLY TRANSITION FROM 24" MINIMUM DEPTH TO 30" MINIMUM DEPTH WITHIN THE ASPHALT AREA.
5. 24" MINIMUM COVER MAY BE REDUCED TO 9" MINIMUM COVER IF NEEDED TO CLEAR A STORM DRAIN OR OTHER FIXED OBJECT AS DIRECTED BY RESIDENT ENGINEER.
6. PROVIDE MINIMUM 4'-11" CLEARANCE BETWEEN ANY CONDUIT AND EXISTING STRUCTURE FOUNDATIONS.
7. ANCHOR/RESTRAIN TOP CONDUIT FROM FLOATING DURING SLURRY CEMENT BACKFILL.
8. CONDUITS MUST BE INSTALLED IN NEW ASPHALT PAVEMENT AFTER AGGREGATE BASE IS PLACED AND COMPACTED.

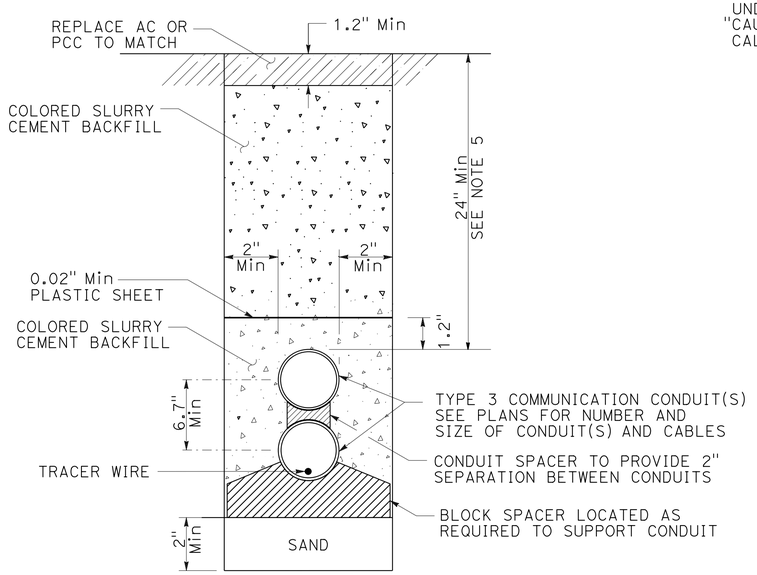

TRENCH IN PAVEMENT (CONCRETE OR ASPHALT) WITH TYPE 3 COMMUNICATION CONDUIT(S)

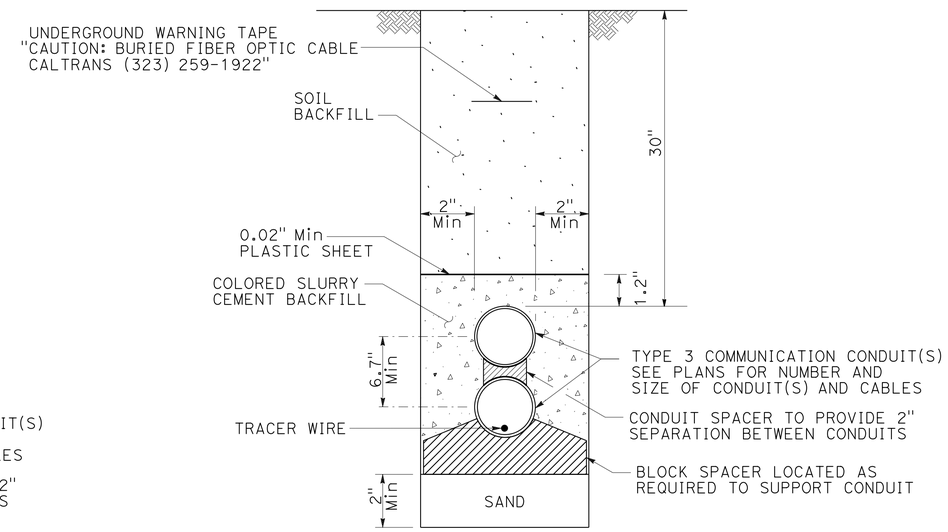

TRENCH IN SOIL WITH TYPE 3 COMMUNICATION CONDUIT(S)

(MODIFYING FIBER OPTIC SYSTEM)
(TRENCH DETAILS)

ELECTRICAL DETAILS

NO SCALE

E-59

STATE OF CALIFORNIA - DEPARTMENT OF TRANSPORTATION
Caltrans®
DESIGN
CONSULTANT FUNCTIONAL SUPERVISOR: WILLIAM SUN
CALCULATED-DESIGNED BY: R. WOO
CHECKED BY: W. SUN
REVISED BY
DATE REVISED

LAST REVISION 00-00-00
DATE PLOTTED => 27-MAY-2016
TIME PLOTTED => 08:18

Dist	COUNTY	ROUTE	POST MILES TOTAL PROJECT	SHEET No.	TOTAL SHEETS
07	LA	60	R24.4/R25.3	262	384

REGISTERED CIVIL ENGINEER 1-15-16 DATE

3-14-16
PLANS APPROVAL DATE

REGISTERED PROFESSIONAL ENGINEER WILLIAM SUN No. 57664 Exp. 12/31/17 CIVIL STATE OF CALIFORNIA

THE STATE OF CALIFORNIA OR ITS OFFICERS OR AGENTS SHALL NOT BE RESPONSIBLE FOR THE ACCURACY OR COMPLETENESS OF SCANNED COPIES OF THIS PLAN SHEET.

LIN CONSULTING, INC.
21660 E. COPLEY DRIVE
#270
DIAMOND BAR, CA 91765

CITY OF INDUSTRY
15651 E. STAFFORD STREET
CITY OF INDUSTRY, CA 91744

NOTE:

ITEMS SHOWN IN TABLES ARE NOT A SEPARATE PAY ITEM, FOR INFORMATION ONLY.

MODIFYING EXISTING ELECTRICAL SYSTEM

MODIFYING EXISTING ELECTRICAL SYSTEM	#2 WIRES	#4 WIRES	#6 WIRES	#8 WIRES	2" TYPE 1 CONDUIT	3" TYPE 1 CONDUIT	No. 5 PULL BOX	No. 5(T) PULL BOX	No. 5 TAMPER RESISTANT COVER	No. 9A PULL BOX	No. 9A SECURITY LID	ISL-85W LIGHTING FIXTURES	TYPE SC2A CONTROL	TYPE 21 LIGHTING STANDARD	TYPE 30 LIGHTING STANDARD	Temp LIGHTING WITH WOOD POLE ASSEMBLY	TEMPORARY WOOD POLE	TYPE "H" RISER	PULL TAPE
SHEET No.	LF	LF	LF	LF	LF	LF	EA	EA	EA	EA	EA	EA	EA	EA	EA	EA	EA	EA	LF
E-1	-	930	-	465	15	-	-	-	-	-	-	-	-	-	-	3	1	1	-
E-2	-	-	1,770	885	80	-	1	1	2	-	-	-	-	-	-	3	2	3	-
E-3	180	1,530	-	720	385	-	-	4	4	-	-	4	1	-	3	1	2	2	-
E-4	3,310	2,085	-	215	925	-	-	7	7	1	1	-	-	-	3	1	2	2	30
E-5	2,720	1,360	-	-	-	-	-	-	-	-	-	-	-	-	-	-	-	-	-
E-6	-	730	-	365	360	-	-	1	1	-	-	-	-	-	1	-	-	-	-
E-7	670	335	-	-	55	70	-	2	2	1	1	-	-	-	-	-	-	-	-
E-8	-	-	-	-	20	-	-	1	1	-	-	-	-	-	-	-	-	-	20
E-9	-	-	1,450	725	580	-	3	-	3	1	1	-	-	2	1	-	-	-	15

LIGHTING (CITY STREET)

SHEET No.	2" TYPE 1 CONDUIT	No. 5 PULL BOX	PULL TAPE
	LF	EA	LF
E-12	1,750	11	2,000

ELECTRICAL QUANTITIES

E-60

STATE OF CALIFORNIA - DEPARTMENT OF TRANSPORTATION
Caltrans DESIGN

CONSULTANT FUNCTIONAL SUPERVISOR: WILLIAM SUN
CALCULATED-DESIGNED BY: R. KOMMIDI
CHECKED BY: W. SUN
REVISED BY
DATE REVISED

LAST REVISION 00-00-00
DATE PLOTTED => 11-MAY-2016
TIME PLOTTED => 13:15

Dist	COUNTY	ROUTE	POST MILES TOTAL PROJECT	SHEET No.	TOTAL SHEETS
07	LA	60	R24.4/R25.3	263	384

REGISTERED CIVIL ENGINEER 1-15-16 DATE

3-14-16
PLANS APPROVAL DATE

REGISTERED PROFESSIONAL ENGINEER WILLIAM SUN No. 57664 Exp. 12/31/17 CIVIL STATE OF CALIFORNIA

THE STATE OF CALIFORNIA OR ITS OFFICERS OR AGENTS SHALL NOT BE RESPONSIBLE FOR THE ACCURACY OR COMPLETENESS OF SCANNED COPIES OF THIS PLAN SHEET.

LIN CONSULTING, INC.
21660 E. COPLEY DRIVE
#270
DIAMOND BAR, CA 91765

CITY OF INDUSTRY
15651 E. STAFFORD STREET
CITY OF INDUSTRY, CA 91744

NOTE:

ITEMS SHOWN IN TABLE(S) ARE NOT A SEPARATE PAY ITEM, FOR INFORMATION ONLY.

MODIFYING EXISTING ELECTRICAL SYSTEM

MODIFY RAMP METERING SYSTEM	12 CSC	5 CSC	#8	#6	DLC	TYPE E DETECTOR LOOP	2" CONDUIT	3" CONDUIT	No. 5(T) PULL BOX	No. 6E(T) PULL BOX	No. 5 TAMPER RESISTANT COVER	No. 6 TAMPER RESISTANT COVER	TYPE 1-A POLE	RAMP METER SIGNAL ASSEMBLY	FLASHING BEACON ASSEMBLY	TEMPORARY WOOD POLE	TYPE "H" RISER	MESSENGER WIRE	MVDS & ASSEMBLY	DEAD-END ASSEMBLY	3"C JACK (100' PUSH)
SHEET No.	LF	LF	LF	LF	LF	EA	LF	LF	EA	EA	EA	EA	EA	EA	EA	EA	EA	LF	EA	EA	EA
E-13	-	-	1,200	620	-	-	35	-	-	-	-	-	-	-	-	3	2	300	-	2	-
E-14	-	-	870	1,740	-	-	310	20	3	1	3	1	-	-	-	5	2	450	1	-	-
E-15	315	450	1,650	1,050	5,850	20	1,400	230	10	-	10	-	3	2	1	-	-	-	-	-	2
E-16	-	-	20	30	-	-	20	-	1	-	1	-	-	-	-	-	-	-	-	-	-

MODIFYING EXISTING ELECTRICAL SYSTEM

MODIFY SIGNAL AND LIGHTING	#8	#6	#4	12CSC	28CSC	DLC	SIC	PULL TAPE	TYPE D DETECTOR LOOP	TYPE E DETECTOR LOOP	2" CONDUIT	3" CONDUIT	4" CONDUIT	No. 5 PULL BOX	No. 5(T) PULL BOX	No. 6 PULL BOX	No. 6E PULL BOX	No. 5 TAMPER RESISTANT COVER	No. 6 TAMPER RESISTANT COVER	5-12" SIGNAL HEAD	4-12" SIGNAL HEAD	3-12" SIGNAL HEAD	PED HEAD	MAS	MAT	SV-1-T M+g	SV-2-T M+g	SP-1-T M+g	MAST ARM SIGN	SIGN ON POLE
SHEET No.	LF	LF	LF	LF	LF	LF	LF	LF	EA	EA	LF	LF	LF	EA	EA	EA	EA	EA	EA	EA	EA	EA	EA	EA	EA	EA	EA	EA	EA	EA
E-24	2,200	-	-	-	-	1,600	1,400	-	6	12	75	-	10	2	-	-	-	-	-	-	2	4	-	1	-	2	-	-	-	24
E-26	1,150	2,580	-	1,935	-	8,100	-	-	8	27	400	75	-	2	5	1	-	4	1	-	1	11	-	1	-	4	2	-	2	20
E-28	600	450	-	1,150	-	1,050	-	100	7	16	150	100	100	2	-	1	-	2	1	-	-	8	-	-	-	5	-	-	-	8
E-30	700	900	30	2,300	-	5,850	-	-	3	9	25	-	-	3	-	-	-	1	-	-	1	8	-	-	-	1	2	-	-	8
E-32	450	700	-	3,000	-	5,000	-	-	2	3	20	-	-	1	-	-	-	-	-	-	1	4	-	-	-	2	-	-	-	-
E-34	1,800	3,000	700	-	600	10,500	1,250	-	12	40	1,200	10	400	11	-	3	1	11	4	2	2	14	2	5	4	5	2	2	4	16

MODIFYING EXISTING ELECTRICAL SYSTEM

MODIFY SIGNAL AND LIGHTING	TEMPORARY WOOD POLE	TYPE "H" RISER	MESSENGER WIRE	SERVICE CABINET	21TS STANDARD	61A-5-100 STANDARD	29A-5-100 STANDARD	26A-4-100 STANDARD	19A-4-100 STANDARD	PBA POST	APS	COUNTDOWN Ped SIGNAL	235W LED	BBS EXTERNAL CABINET	BATTERIES
SHEET No.	EA	EA	LF	EA	EA	EA	EA	EA	EA	EA	EA	EA	EA	EA	EA
E-24	10	4	1,000	-	-	-	-	-	-	-	12	-	-	-	-
E-26	10	5	900	-	1	1	-	-	-	-	-	-	5	-	-
E-28	4	1	300	-	1	-	1	-	-	-	-	-	2	-	-
E-30	6	2	450	1	-	-	-	-	-	-	-	-	2	-	-
E-32	4	2	450	-	-	-	-	-	-	-	-	-	-	-	-
E-34	-	-	-	-	1	1	-	1	1	3	2	2	4	1	4

ELECTRICAL QUANTITIES

E-61

REVISED BY | DATE REVISED
B. YAU | W. SUN
CALCULATED-DESIGNED BY | CHECKED BY
CONSULTANT FUNCTIONAL SUPERVISOR
WILLIAM SUN
STATE OF CALIFORNIA - DEPARTMENT OF TRANSPORTATION
Caltrans
DESIGN

LAST REVISION 00-00-00
DATE PLOTTED => 09-MAY-2016
TIME PLOTTED => 16:05

Dist	COUNTY	ROUTE	POST MILES TOTAL PROJECT	SHEET No.	TOTAL SHEETS
07	LA	60	R24.4/R25.3	264	384

REGISTERED CIVIL ENGINEER 1-15-16 DATE

3-14-16
PLANS APPROVAL DATE

REGISTERED PROFESSIONAL ENGINEER WILLIAM SUN No. 57664 Exp. 12/31/17 CIVIL STATE OF CALIFORNIA

THE STATE OF CALIFORNIA OR ITS OFFICERS OR AGENTS SHALL NOT BE RESPONSIBLE FOR THE ACCURACY OR COMPLETENESS OF SCANNED COPIES OF THIS PLAN SHEET.

LIN CONSULTING, INC.
21660 E. COPLEY DRIVE
#270
DIAMOND BAR, CA 91765

CITY OF INDUSTRY
15651 E. STAFFORD STREET
CITY OF INDUSTRY, CA 91744

NOTE:

ITEMS SHOWN IN TABLE(S) ARE NOT A SEPARATE PAY ITEM, FOR INFORMATION ONLY.

ELECTRIC SERVICE FOR IRRIGATION

SHEET No.	#8	2" CONDUIT	3" CONDUIT	No. 5 PULL BOX	No. 5(T) PULL BOX	No. 5 TAMPER RESISTANT COVER
	LF	LF	LF	EA	EA	EA
E-46	3,100	830	200	2	5	7

MODIFYING EXISTING ELECTRICAL SYSTEM

MODIFYING FIBER OPTIC SYSTEM (TEMPORARY)	FIBER OPTIC 12SMFO	FIBER OPTIC 72SMFO	OVERHEAD FIBER OPTIC MESSENGER WIRE	2" CONDUIT	3" CONDUIT	COMMUNICATION PULL BOX	TEMPORARY WOOD POLE	TYPE "H" RISER	DEAD-END ASSEMBLY
SHEET No.	LF	LF	LF	LF	LF	EA	EA	EA	EA
E-48	1,500	1,200	1,900	40	30	-	15	3	4
E-49	150	1,200	1,275	70	-	-	8	1	-
E-50	-	1,400	1,400	-	-	-	7	-	-
E-51	-	1,550	1,500	-	20	1	10	1	2

MODIFYING EXISTING ELECTRICAL SYSTEM

MODIFYING FIBER OPTIC SYSTEM	FIBER OPTIC 12SMFO	FIBER OPTIC 36SMFO	FIBER OPTIC 48SMFO	FIBER OPTIC 72SMFO	2" CONDUIT	3" CONDUIT	4" CONDUIT	INNERDUCTS (SIZE 1")	PULL TAPE	SPLICE ENCLOSURE	COMMUNICATION PULL BOX	SPLICE VAULT	No. 5(T) PULL BOX	No. 5 TAMPER RESISTANT COVER	4"C JACK (100' PUSH)	TRACER WIRE
SHEET No.	LF	LF	LF	LF	LF	LF	LF	LF	LF	EA	EA	EA	EA	EA	EA	LF
E-52	600	750	750	750	590	20	750	2,900	1,450	1	3	-	2	2	3	750
E-53	310	1,300	1,300	1,300	-	20	2,650	5,900	2,600	1	2	2	1	1	2	1,550
E-54	-	1,400	1,400	1,400	-	-	2,800	5,600	2,800	-	1	-	-	-	-	1,400
E-55	-	1,500	1,500	1,500	-	-	1,700	3,300	1,700	1	-	1	-	-	-	1,700

ELECTRICAL QUANTITIES

E-62

REVISED BY | DATE REVISED
R. WOO | W. SUN
CALCULATED-DESIGNED BY | CHECKED BY
CONSULTANT FUNCTIONAL SUPERVISOR
WILLIAM SUN

STATE OF CALIFORNIA - DEPARTMENT OF TRANSPORTATION
Caltrans
DESIGN

LAST REVISION 00-00-00 | DATE PLOTTED => 27-MAY-2016 | TIME PLOTTED => 08:19

M

Maint	MAINTENANCE
Max	MAXIMUM
MB	METAL BEAM
MBB	METAL BEAM BARRIER
MBGR	METAL BEAM GUARD RAILING
Med	MEDIAN
MGS	MIDWEST GUARDRAIL SYSTEM
MH	MANHOLE
Min	MINIMUM
Misc	MISCELLANEOUS
Misc I & S	MISCELLANEOUS IRON AND STEEL
Mkr	MARKER
Mod	MODIFIED,
	MODIFY
Mon	MONUMENT
MP	METAL PLATE
MPGR	METAL PLATE GUARD RAILING
MR	MOVEMENT RATING
MSE	MECHANICALLY STABILIZED EMBANKMENT
Mt	MOUNTAIN, MOUNT
Mtl	MATERIAL
MVP	MAINTENANCE VEHICLE PULLOUT

N

N	NORTH
NB	NORTHBOUND
No.	NUMBER (MUST HAVE PERIOD)
Nos.	NUMBERS (MUST HAVE PERIOD)
NPS	NOMINAL PIPE SIZE
NS	NEAR SIDE
NSP	NEW STANDARD PLAN
NTS	NOT TO SCALE

O

Oblr	OBLITERATE
OC	OVERCROSSING
OD	OUTSIDE DIAMETER
OF	OUTSIDE FACE
OG	ORIGINAL GROUND
OGAC	OPEN GRADED ASPHALT CONCRETE
OGFC	OPEN GRADED FRICTION COURSE
OH	OVERHEAD
OHWM	ORDINARY HIGH WATER MARK
O-O	OUT TO OUT
Opp	OPPOSITE
OSD	OVERSIDE DRAIN

P

P	PAGE
PAP	PERFORATED ALUMINUM PIPE
PB	PULL BOX
PC	POINT OF CURVATURE,
	PRECAST
PCC	POINT OF COMPOUND CURVE,
	PORTLAND CEMENT CONCRETE
PCMS	PORTABLE CHANGEABLE MESSAGE SIGN
PCP	PERFORATED CONCRETE PIPE,
	PRESTRESSED CONCRETE PIPE
PCVC	POINT OF COMPOUND VERTICAL CURVE
PEC	PERMIT TO ENTER AND CONSTRUCT
Ped	PEDESTRIAN
Ped OC	PEDESTRIAN OVERCROSSING
Ped UC	PEDESTRIAN UNDERCROSSING
Perm Mtl	PERMEABLE MATERIAL

P continued

PG	PROFILE GRADE
PI	POINT OF INTERSECTION
PJP	PARTIAL JOINT PENETRATION
Pkwy	PARKWAY
ℙ,PL	PLATE
P/L	PROPERTY LINE
PM	POST MILE,
	TIME FROM NOON TO MIDNIGHT
PN	PAVING NOTCH
POC	POINT OF HORIZONTAL CURVE
POT	POINT OF TANGENT
POVC	POINT OF VERTICAL CURVE
PP	PIPE PILE,
	PLASTIC PIPE,
	POWER POLE
PPL	PREFORMED PERMEABLE LINER
PPP	PERFORATED PLASTIC PIPE
PRC	POINT OF REVERSE CURVE
PRF	PAVEMENT REINFORCING FABRIC
PRVC	POINT OF REVERSE VERTICAL CURVE
PS&E	PLANS, SPECIFICATIONS AND ESTIMATES
PS, P/S	PRESTRESSED
PSP	PERFORATED STEEL PIPE
PT	POINT OF TANGENCY
PVC	POLYVINYL CHLORIDE
Pvmt	PAVEMENT

Q

Qty	QUANTITY

R

R	RADIUS
R & D	REMOVE AND DISPOSE
R & S	REMOVE AND SALVAGE
R/C	RATE OF CHANGE
RCA	REINFORCED CONCRETE ARCH
RCB	REINFORCED CONCRETE BOX
RCP	REINFORCED CONCRETE PIPE
RCPA	REINFORCED CONCRETE PIPE ARCH
Rd	ROAD
Reinf	REINFORCED,
	REINFORCEMENT,
	REINFORCING
Rel	RELOCATE
Repl	REPLACEMENT
Ret	RETAINING
Rev	REVISED, REVISION
Rdwy	ROADWAY
RHMA	RUBBERIZED HOT MIX ASPHALT
Riv	RIVER
RM	ROAD-MIXED
RP	RADIUS POINT,
	REFERENCE POINT
RR	RAILROAD
RSP	ROCK SLOPE PROTECTION,
	REVISED STANDARD PLAN
Rt	RIGHT
Rte	ROUTE
RW	REDWOOD,
	RETAINING WALL
R/W	RIGHT OF WAY
Rwy	RAILWAY

S

S	SOUTH,
	SUPPLEMENT
SAE	STRUCTURE APPROACH EMBANKMENT
Salv	SALVAGE
SAPP	STRUCTURAL ALUMINUM PLATE PIPE
SB	SOUTHBOUND
SC	SAND CUSHION
SCSP	SLOTTED CORRUGATED STEEL PIPE
SD	STORM DRAIN
Sec	SECOND,
	SECTION
Sep	SEPARATION
SG	SUBGRADE
Shld	SHOULDER
Sht	SHEET
Sim	SIMILAR
℄	STATION LINE
SM	SELECTED MATERIAL
Spec	SPECIAL,
	SPECIFICATIONS
SPP	SLOTTED PLASTIC PIPE
SS	SLOPE STAKE
SSBM	STRAP AND SADDLE BRACKET METHOD
SSD	STRUCTURAL SECTION DRAIN
SSPA	STRUCTURAL STEEL PLATE ARCH
SSPP	STRUCTURAL STEEL PLATE PIPE
SSPPA	STRUCTURAL STEEL PLATE PIPE ARCH
SSRP	STEEL SPIRAL RIB PIPE
St	STREET
Sta	STATION
STBB	SINGLE THRIE BEAM BARRIER
Std	STANDARD
Str	STRUCTURE
Surf	SURFACING
SW	SIDEWALK,
	SOUND WALL
Swr	SEWER
Sym	SYMMETRICAL
S4S	SURFACE 4 SIDES

T

T	SEMI-TANGENT
Tan	TANGENT
TBB	THRIE BEAM BARRIER
Tbr	TIMBER
TC	TOP OF CURB
TCB	TRAFFIC CONTROL BOX
TCE	TEMPORARY CONSTRUCTION EASEMENT
Tel	TELEPHONE
Temp	TEMPORARY
TG	TOP OF GRADE
Tot	TOTAL
TP	TELEPHONE POLE
TPB	TREATED PERMEABLE BASE
TPM	TREATED PERMEABLE MATERIAL
Trans	TRANSITION

T continued

TS	TRANSVERSE,
	TRAFFIC SIGNAL,
	TUBULAR STEEL
Typ	TYPICAL

U

UC	UNDERCROSSING
UD	UNDERDRAIN
UG	UNDERGROUND
UON	UNLESS OTHERWISE NOTED
UP	UNDERPASS

V

V	VALVE,
	DESIGN SPEED
Var	VARIABLE,
	VARIES
VC	VERTICAL CURVE
VCP	VITRIFIED CLAY PIPE
Vert	VERTICAL
Via	VIADUCT
Vol	VOLUME

W

W	WEST,
	WIDTH
WB	WESTBOUND
WH	WEEP HOLE
WM	WIRE MESH
WS	WATER SURFACE
WSP	WELDED STEEL PIPE
Wt	WEIGHT
WV	WATER VALVE
WW	WINGWALL
WWLOL	WINGWALL LAYOUT LINE

X

X Sec	CROSS SECTION
Xing	CROSSING

Y

Yr	YEAR
Yrs	YEARS

Dist	COUNTY	ROUTE	POST MILES TOTAL PROJECT	SHEET No.	TOTAL SHEETS
07	LA	60	R24.4/R25.3	265	384

Grace M. Tsushima
REGISTERED CIVIL ENGINEER

July 19, 2013
PLANS APPROVAL DATE

REGISTERED PROFESSIONAL ENGINEER Grace M. Tsushima No. C49814 Exp. 9-30-14 CIVIL STATE OF CALIFORNIA

THE STATE OF CALIFORNIA OR ITS OFFICERS OR AGENTS SHALL NOT BE RESPONSIBLE FOR THE ACCURACY OR COMPLETENESS OF SCANNED COPIES OF THIS PLAN SHEET.

TO ACCOMPANY PLANS DATED 3-14-16

2010 REVISED STANDARD PLAN RSP A10B

UNIT OF MEASUREMENT SYMBOLS:

Some of the symbols used in the project plan quantity tables and in the Bid Item List are:

TABLE A

SYMBOL USED	DEFINITIONS
ACRE	ACRE
CF	CUBIC FOOT
CY	CUBIC YARD
EA	EACH
GAL	GALLON
LB	POUND
LF	LINEAR FOOT
SQFT	SQUARE FOOT
SQYD	SQUARE YARD
STA	100 FEET
TAB	TABLET
TON	2,000 POUNDS

Some of the symbols used in the plans other than in the project plan quantity tables are:

TABLE B

SYMBOL USED	DEFINITIONS
ksi	KIPS PER SQUARE INCH
ksf	KIPS PER SQUARE FOOT
psi	POUNDS PER SQUARE INCH
psf	POUNDS PER SQUARE FOOT
lb/ft^3, pcf	POUNDS PER CUBIC FOOT
tsf	TONS PER SQUARE FOOT
mph, MPH *	MILES PER HOUR
ø	NOMINAL DIAMETER
oz	OUNCE
lb	POUND
kip	1,000 POUNDS
cal	CALORIE
ft	FOOT OR FEET
gal	GALLON

* For use on a sign panel only

STATE OF CALIFORNIA
DEPARTMENT OF TRANSPORTATION

ABBREVIATIONS (SHEET 2 OF 2)

NO SCALE

RSP A10B DATED JULY 19, 2013 SUPERSEDES STANDARD PLAN A10B DATED MAY 20, 2011 - PAGE 2 OF THE STANDARD PLANS BOOK DATED 2010.

REVISED STANDARD PLAN RSP A10B

6-7-13

REFERENCE: CALTRANS SOIL & ROCK LOGGING, CLASSIFICATION, AND PRESENTATION MANUAL (2010)

Dist	COUNTY	ROUTE	POST MILES TOTAL PROJECT	SHEET No.	TOTAL SHEETS
07	LA	60	R24.4/R25.3	266	384

CERTIFIED ENGINEERING GEOLOGIST

October 30, 2015
PLANS APPROVAL DATE

REGISTERED GEOLOGIST
CHRIS A. RISDEN
CERTIFIED ENGINEERING GEOLOGIST
No. 2541
Exp. 9-30-17
STATE OF CALIFORNIA

THE STATE OF CALIFORNIA OR ITS OFFICERS OR AGENTS SHALL NOT BE RESPONSIBLE FOR THE ACCURACY OR COMPLETENESS OF SCANNED COPIES OF THIS PLAN SHEET.

TO ACCOMPANY PLANS DATED 3-14-16

ABBREVIATION:

GWS = Ground Water Surface

CEMENTATION

DESCRIPTION	CRITERIA
WEAK	CRUMBLES OR BREAKS WITH HANDLING OR LITTLE FINGER PRESSURE.
MODERATE	CRUMBLES OR BREAKS WITH CONSIDERABLE FINGER PRESSURE.
STRONG	WILL NOT CRUMBLE OR BREAK WITH FINGER PRESSURE.

BOREHOLE IDENTIFICATION

SYMBOL	HOLE TYPE	DESCRIPTION
Size	A	AUGER BORING (HOLLOW OR SOLID STEM BUCKET)
Size	R	ROTARY DRILLED BORING (CONVENTIONAL)
	RW	ROTARY DRILLED WITH SELF-CASING WIRE-LINE
	RC	ROTARY CORE WITH CONTINUOUSLY-SAMPLED, SELF-CASING WIRE-LINE
	P	ROTARY PERCUSSION BORING (AIR)
Size	R	ROTARY DRILLED DIAMOND CORE
	RC	ROTARY DRILLED DIAMOND CORE, CONTINUOUSLY SAMPLED
Size	HD	HAND DRIVEN (1-INCH SOIL TUBE)
	HA	HAND AUGER
●	D	DYNAMIC CONE PENETRATION BORING
▲	CPT	CONE PENETRATION TEST (ASTM D 5778)
⬚	O	OTHER (NOTE ON LOTB)

Note: Size in inches.

CONSISTENCY OF COHESIVE SOILS

DESCRIPTION	SHEAR STRENGTH (tsf)	POCKET PENETROMETER MEASUREMENT, PP, (tsf)	TORVANE MEASUREMENT, TV, (tsf)	VANE SHEAR MEASUREMENT, VS, (tsf)
VERY SOFT	LESS THAN 0.12	LESS THAN 0.25	LESS THAN 0.12	LESS THAN 0.12
SOFT	0.12 - 0.25	0.25 - 0.5	0.12 - 0.25	0.12 - 0.25
MEDIUM STIFF	0.25 - 0.5	0.5 - 1	0.25 - 0.5	0.25 - 0.5
STIFF	0.5 - 1	1 - 2	0.5 - 1	0.5 - 1
VERY STIFF	1 - 2	2 - 4	1 - 2	1 - 2
HARD	GREATER THAN 2	GREATER THAN 4	GREATER THAN 2	GREATER THAN 2

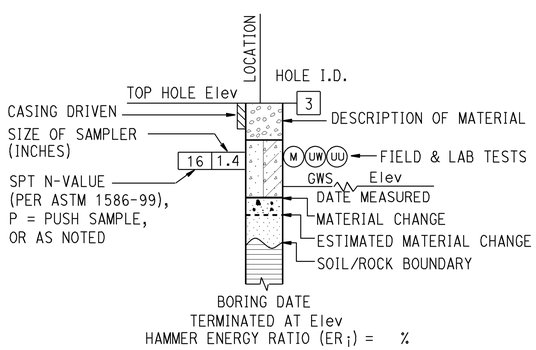

ROTARY BORING

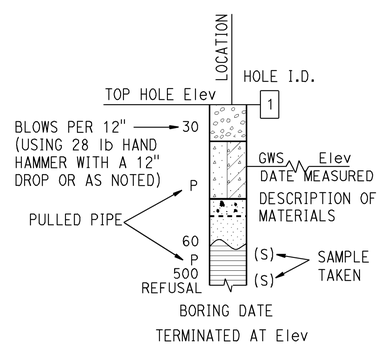

HAND BORING

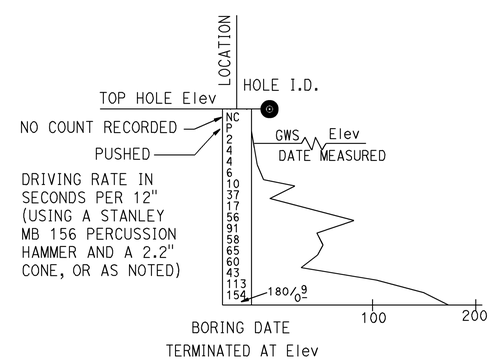

DYNAMIC CONE PENETRATION BORING

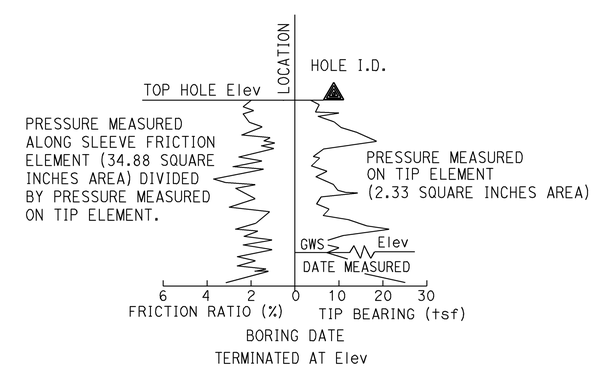

CONE PENETRATION TEST (CPT) BORING

STATE OF CALIFORNIA
DEPARTMENT OF TRANSPORTATION

LEGEND - SOIL (SHEET 1 OF 2)

NO SCALE

RSP A10F DATED OCTOBER 30, 2015 SUPERSEDES STANDARD PLAN A10F DATED MAY 20, 2011 - PAGE 6 OF THE STANDARD PLANS BOOK DATED 2010.

REVISED STANDARD PLAN RSP A10F

2010 REVISED STANDARD PLAN RSP A10F

8-18-15

REFERENCE: CALTRANS SOIL & ROCK LOGGING, CLASSIFICATION, AND PRESENTATION MANUAL (2010)

Dist	COUNTY	ROUTE	POST MILES TOTAL PROJECT	SHEET No.	TOTAL SHEETS
07	LA	60	R24.4/R25.3	267	384

CERTIFIED ENGINEERING GEOLOGIST

October 30, 2015
PLANS APPROVAL DATE

REGISTERED GEOLOGIST
CHRIS A. RISDEN
CERTIFIED ENGINEERING GEOLOGIST
No. 2541
Exp. 9-30-17
STATE OF CALIFORNIA

THE STATE OF CALIFORNIA OR ITS OFFICERS OR AGENTS SHALL NOT BE RESPONSIBLE FOR THE ACCURACY OR COMPLETENESS OF SCANNED COPIES OF THIS PLAN SHEET.

TO ACCOMPANY PLANS DATED 3-14-16

GROUP SYMBOLS AND NAMES

GRAPHIC/SYMBOL	GROUP NAMES	GRAPHIC/SYMBOL	GROUP NAMES
GW	WELL-GRADED GRAVEL WELL-GRADED GRAVEL WITH SAND	CL	LEAN CLAY LEAN CLAY WITH SAND LEAN CLAY WITH GRAVEL SANDY LEAN CLAY SANDY LEAN CLAY WITH GRAVEL GRAVELLY LEAN CLAY GRAVELLY LEAN CLAY WITH SAND
GP	POORLY-GRADED GRAVEL POORLY-GRADED GRAVEL WITH SAND		
GW-GM	WELL-GRADED GRAVEL WITH SILT WELL-GRADED GRAVEL WITH SILT AND SAND	CL-ML	SILTY CLAY SILTY CLAY WITH SAND SILTY CLAY WITH GRAVEL SANDY SILTY CLAY SANDY SILTY CLAY WITH GRAVEL GRAVELLY SILTY CLAY GRAVELLY SILTY CLAY WITH SAND
GW-GC	WELL-GRADED GRAVEL WITH CLAY (OR SILTY CLAY) WELL-GRADED GRAVEL WITH CLAY AND SAND (OR SILTY CLAY AND SAND)		
GP-GM	POORLY-GRADED GRAVEL WITH SILT POORLY-GRADED GRAVEL WITH SILT AND SAND	ML	SILT SILT WITH SAND SILT WITH GRAVEL SANDY SILT SANDY SILT WITH GRAVEL GRAVELLY SILT GRAVELLY SILT WITH SAND
GP-GC	POORLY-GRADED GRAVEL WITH CLAY (OR SILTY CLAY) POORLY-GRADED GRAVEL WITH CLAY AND SAND (OR SILTY CLAY AND SAND)		
GM	SILTY GRAVEL SILTY GRAVEL WITH SAND	OL	ORGANIC LEAN CLAY ORGANIC LEAN CLAY WITH SAND ORGANIC LEAN CLAY WITH GRAVEL SANDY ORGANIC LEAN CLAY SANDY ORGANIC LEAN CLAY WITH GRAVEL GRAVELLY ORGANIC LEAN CLAY GRAVELLY ORGANIC LEAN CLAY WITH SAND
GC	CLAYEY GRAVEL CLAYEY GRAVEL WITH SAND		
GC-GM	SILTY, CLAYEY GRAVEL SILTY, CLAYEY GRAVEL WITH SAND	OL	ORGANIC SILT ORGANIC SILT WITH SAND ORGANIC SILT WITH GRAVEL SANDY ORGANIC SILT SANDY ORGANIC SILT WITH GRAVEL GRAVELLY ORGANIC SILT GRAVELLY ORGANIC SILT WITH SAND
SW	WELL-GRADED SAND WELL-GRADED SAND WITH GRAVEL		
SP	POORLY-GRADED SAND POORLY-GRADED SAND WITH GRAVEL	CH	FAT CLAY FAT CLAY WITH SAND FAT CLAY WITH GRAVEL SANDY FAT CLAY SANDY FAT CLAY WITH GRAVEL GRAVELLY FAT CLAY GRAVELLY FAT CLAY WITH SAND
SW-SM	WELL-GRADED SAND WITH SILT WELL-GRADED SAND WITH SILT AND GRAVEL		
SW-SC	WELL-GRADED SAND WITH CLAY (OR SILTY CLAY) WELL-GRADED SAND WITH CLAY AND GRAVEL (OR SILTY CLAY AND GRAVEL)	MH	ELASTIC SILT ELASTIC SILT WITH SAND ELASTIC SILT WITH GRAVEL SANDY ELASTIC SILT SANDY ELASTIC SILT WITH GRAVEL GRAVELLY ELASTIC SILT GRAVELLY ELASTIC SILT WITH SAND
SP-SM	POORLY-GRADED SAND WITH SILT POORLY-GRADED SAND WITH SILT AND GRAVEL		
SP-SC	POORLY-GRADED SAND WITH CLAY (OR SILTY CLAY) POORLY-GRADED SAND WITH CLAY AND GRAVEL (OR SILTY CLAY AND GRAVEL)	OH	ORGANIC FAT CLAY ORGANIC FAT CLAY WITH SAND ORGANIC FAT CLAY WITH GRAVEL SANDY ORGANIC FAT CLAY SANDY ORGANIC FAT CLAY WITH GRAVEL GRAVELLY ORGANIC FAT CLAY GRAVELLY ORGANIC FAT CLAY WITH SAND
SM	SILTY SAND SILTY SAND WITH GRAVEL		
SC	CLAYEY SAND CLAYEY SAND WITH GRAVEL	OH	ORGANIC ELASTIC SILT ORGANIC ELASTIC SILT WITH SAND ORGANIC ELASTIC SILT WITH GRAVEL SANDY ORGANIC ELASTIC SILT SANDY ORGANIC ELASTIC SILT WITH GRAVEL GRAVELLY ORGANIC ELASTIC SILT GRAVELLY ORGANIC ELASTIC SILT WITH SAND
SC-SM	SILTY, CLAYEY SAND SILTY, CLAYEY SAND WITH GRAVEL		
PT	PEAT	OL/OH	ORGANIC SOIL ORGANIC SOIL WITH SAND ORGANIC SOIL WITH GRAVEL SANDY ORGANIC SOIL SANDY ORGANIC SOIL WITH GRAVEL GRAVELLY ORGANIC SOIL GRAVELLY ORGANIC SOIL WITH SAND
	COBBLES COBBLES AND BOULDERS BOULDERS		

FIELD AND LABORATORY TESTING

- (C) CONSOLIDATION (ASTM D2435)
- (CL) COLLAPSE POTENTIAL (ASTM D4546)
- (CP) COMPACTION CURVE (CTM 216)
- (CR) CORROSIVITY TESTING (CTM 643, CTM 422, CTM 417)
- (CU) CONSOLIDATED UNDRAINED TRIAXIAL (ASTM D4767)
- (DS) DIRECT SHEAR (ASTM D3080)
- (EI) EXPANSION INDEX (ASTM D4829)
- (M) MOISTURE CONTENT (ASTM D2216)
- (OC) ORGANIC CONTENT-% (ASTM D2974)
- (P) PERMEABILITY (CTM 220)
- (PA) PARTICLE SIZE ANALYSIS (ASTM D422)
- (PI) PLASTICITY INDEX (AASHTO T 90) LIQUID LIMIT (AASHTO T 89)
- (PL) POINT LOAD INDEX (ASTM D5731)
- (PM) PRESSURE METER
- (R) R-VALUE (CTM 301)
- (SE) SAND EQUIVALENT (CTM 217)
- (SG) SPECIFIC GRAVITY (AASHTO T 100)
- (SL) SHRINKAGE LIMIT (ASTM D4943)
- (SW) SWELL POTENTIAL (ASTM D4546)
- (UC) UNCONFINED COMPRESSION-SOIL (ASTM D2166) UNCONFINED COMPRESSION-ROCK (ASTM D7012 - METHOD C)
- (UU) UNCONSOLIDATED UNDRAINED TRIAXIAL (ASTM D2850)
- (UW) UNIT WEIGHT (ASTM D7263 - METHOD B)

APPARENT DENSITY OF COHESIONLESS SOILS

DESCRIPTION	SPT N_{60} (BLOWS / 12 INCHES)
VERY LOOSE	0 - 5
LOOSE	5 - 10
MEDIUM DENSE	10 - 30
DENSE	30 - 50
VERY DENSE	GREATER THAN 50

MOISTURE

DESCRIPTION	CRITERIA
DRY	NO DISCERNABLE MOISTURE
MOIST	MOISTURE PRESENT, BUT NO FREE WATER
WET	VISIBLE FREE WATER

PERCENT OR PROPORTION OF SOILS

DESCRIPTION	CRITERIA
TRACE	PARTICLES ARE PRESENT BUT ESTIMATED TO BE LESS THAN 5%
FEW	5% - 10%
LITTLE	15% - 25%
SOME	30% - 45%
MOSTLY	50% - 100%

PARTICLE SIZE

DESCRIPTION		SIZE
BOULDER		GREATER THAN 12"
COBBLE		3" - 12"
GRAVEL	COARSE	3/4" - 3"
	FINE	1/5" - 3/4"
SAND	COARSE	1/16" - 1/5"
	MEDIUM	1/64" - 1/16"
	FINE	1/300" - 1/64"
SILT AND CLAY		LESS THAN 1/300"

STATE OF CALIFORNIA
DEPARTMENT OF TRANSPORTATION

LEGEND - SOIL (SHEET 2 OF 2)

NO SCALE

RSP A10G DATED OCTOBER 30, 2015 SUPERSEDES STANDARD PLAN A10G DATED MAY 20, 2011 - PAGE 7 OF THE STANDARD PLANS BOOK DATED 2010.

REVISED STANDARD PLAN RSP A10G

2010 REVISED STANDARD PLAN RSP A10G

9-22-16

Dist	COUNTY	ROUTE	POST MILES TOTAL PROJECT	SHEET No.	TOTAL SHEETS
07	LA	60	R24.4/R25.3	268	384

REGISTERED CIVIL ENGINEER

July 19, 2013
PLANS APPROVAL DATE

REGISTERED PROFESSIONAL ENGINEER Roberta L. McLaughlin No. C40375 Exp. 3-31-15 CIVIL STATE OF CALIFORNIA

THE STATE OF CALIFORNIA OR ITS OFFICERS OR AGENTS SHALL NOT BE RESPONSIBLE FOR THE ACCURACY OR COMPLETENESS OF SCANNED COPIES OF THIS PLAN SHEET.

TO ACCOMPANY PLANS DATED 3-14-16

EXIT RAMP NEUTRAL AREA (GORE) TREATMENT

DETAIL 36

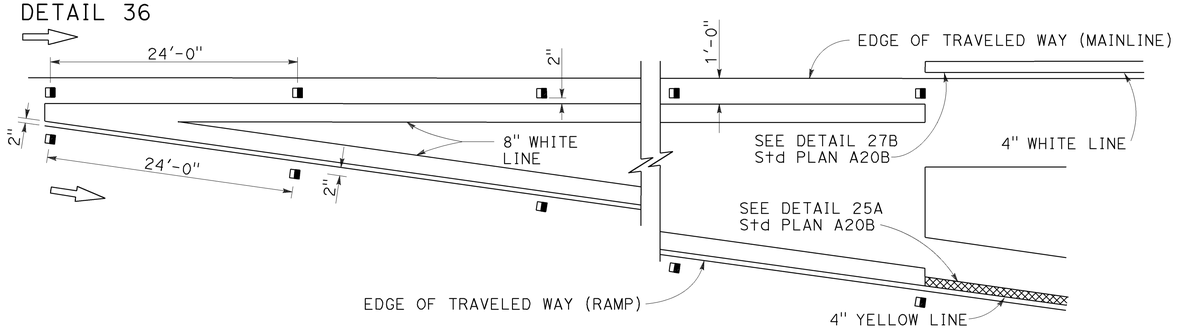

ENTRANCE RAMP NEUTRAL AREA (MERGE) TREATMENT

DETAIL 36A

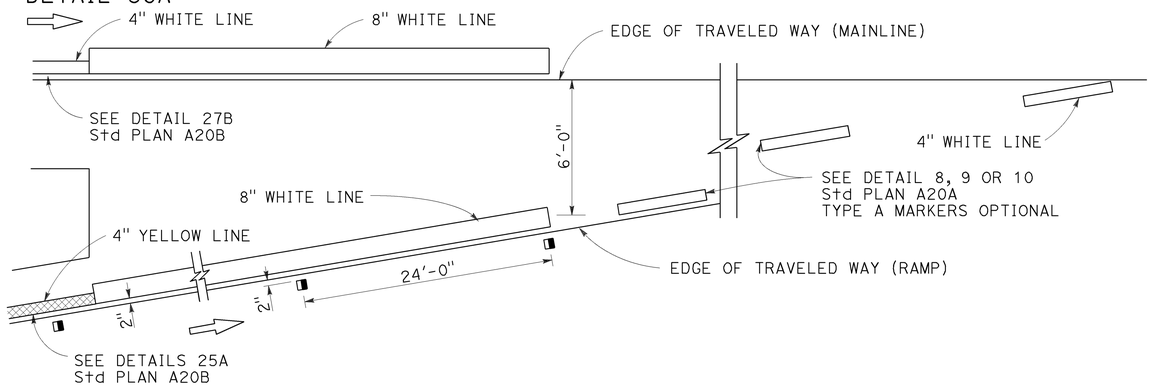

ENTRANCE RAMP NEUTRAL AREA (ACCELERATION LANE) TREATMENT

DETAIL 36B

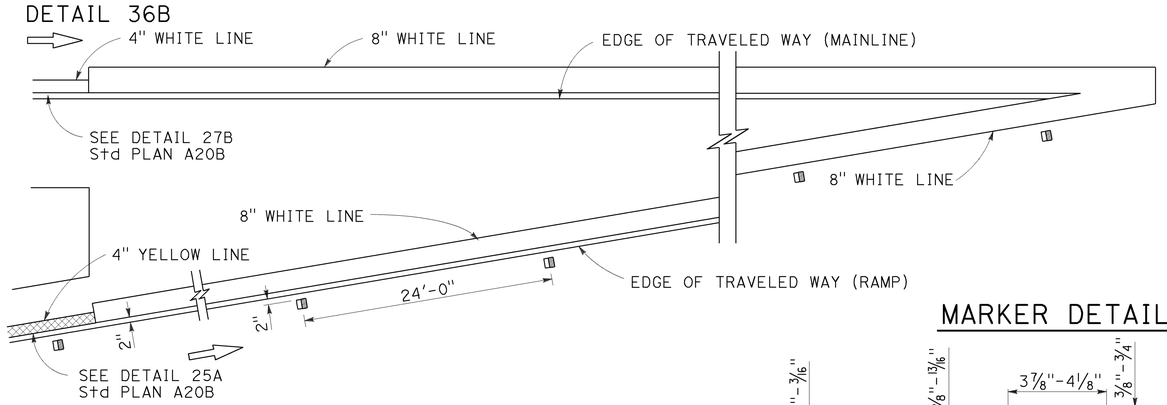

LANE DROP AT EXIT RAMPS

DETAIL 37

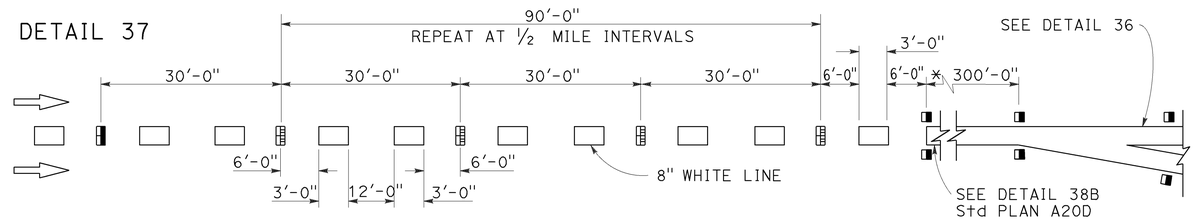

DETAIL 37A

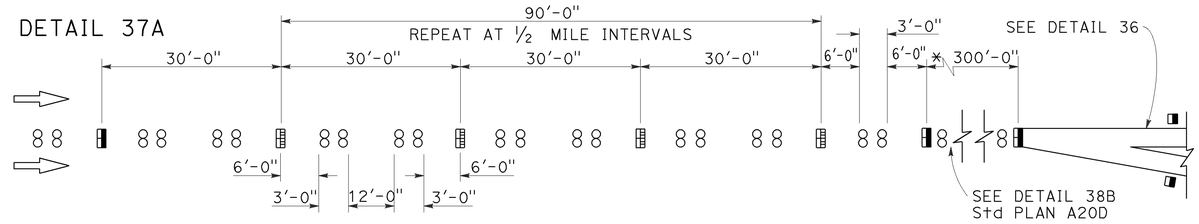

* The solid channelizing line shown may be omitted on short auxiliary lanes where weaving length is critical.

LANE DROP AT INTERSECTIONS

DETAIL 37B

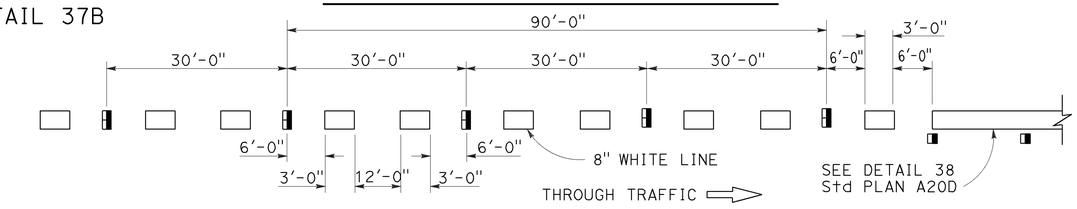

DETAIL 37C

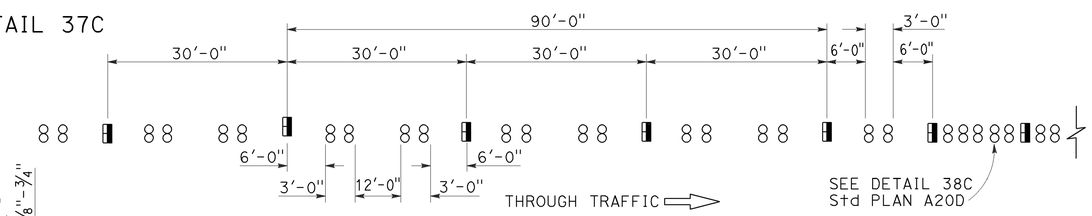

MARKER DETAILS

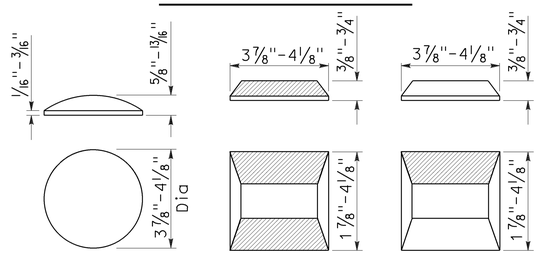

RETROREFLECTIVE FACE

LEGEND:

MARKERS

- ○ TYPE A WHITE NON-REFLECTIVE
- ⊞ TYPE C RED-CLEAR RETROREFLECTIVE
- ◨ TYPE G ONE-WAY CLEAR RETROREFLECTIVE

STATE OF CALIFORNIA
DEPARTMENT OF TRANSPORTATION

PAVEMENT MARKERS AND TRAFFIC LINE TYPICAL DETAILS

NO SCALE

RSP A20C DATED JULY 19, 2013 SUPERSEDES STANDARD PLAN A20C DATED MAY 20, 2011 - PAGE 11 OF THE STANDARD PLANS BOOK DATED 2010.

REVISED STANDARD PLAN RSP A20C

2010 REVISED STANDARD PLAN RSP A20C

4-29-13

Dist	COUNTY	ROUTE	POST MILES TOTAL PROJECT	SHEET No.	TOTAL SHEETS
07	LA	60	R24.4/R25.3	269	384

REGISTERED CIVIL ENGINEER

April 20, 2012
PLANS APPROVAL DATE

REGISTERED PROFESSIONAL ENGINEER
Roberta L. McLaughlin
No. C40375
Exp. 3-31-13
CIVIL
STATE OF CALIFORNIA

THE STATE OF CALIFORNIA OR ITS OFFICERS OR AGENTS SHALL NOT BE RESPONSIBLE FOR THE ACCURACY OR COMPLETENESS OF SCANNED COPIES OF THIS PLAN SHEET.

TO ACCOMPANY PLANS DATED 3-14-16

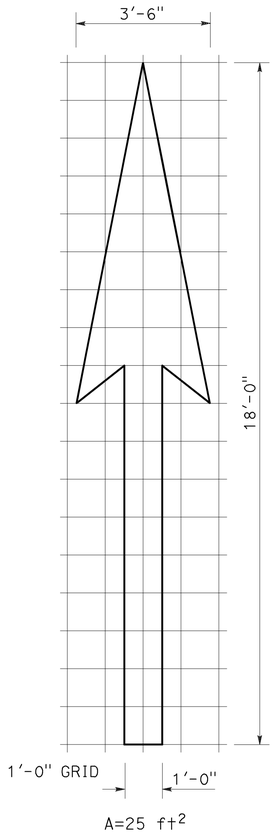

A=25 ft^2

TYPE I 18'-0" ARROW

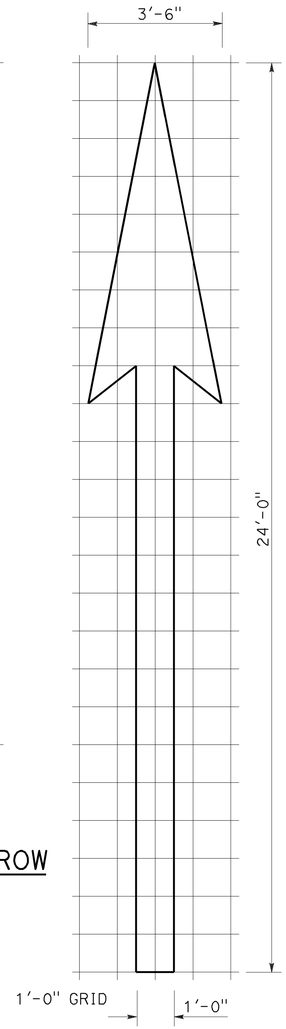

A=31 ft^2

TYPE I 24'-0" ARROW

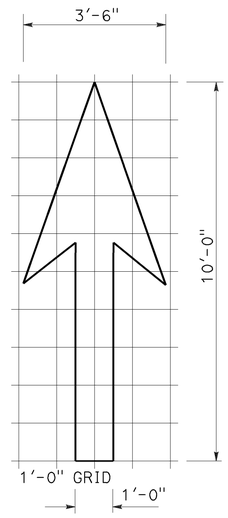

A=14 ft^2

TYPE I 10'-0" ARROW

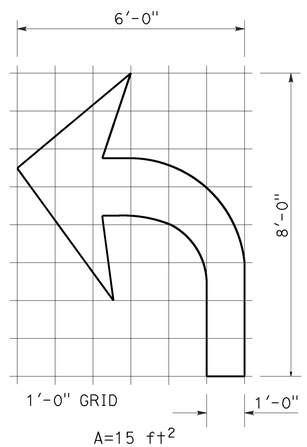

A=15 ft^2

TYPE IV (L) ARROW

(For Type IV (R) arrow, use mirror image)

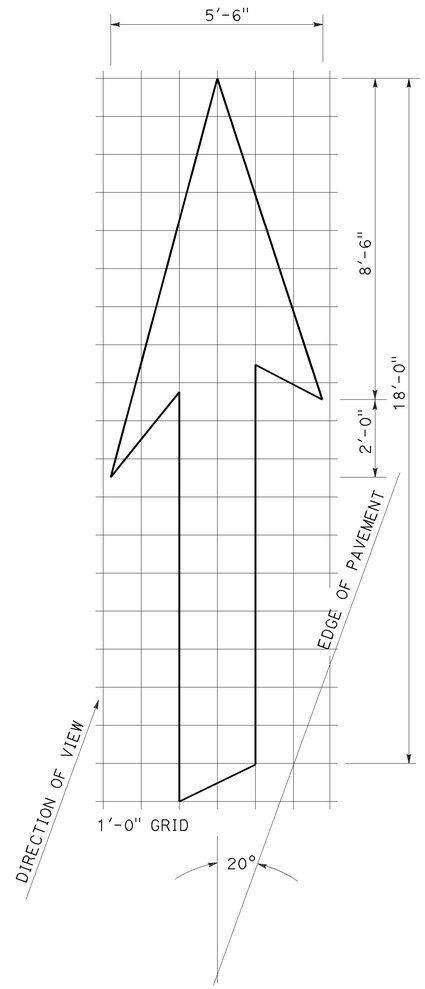

A=42 ft^2

TYPE VI ARROW

Right lane drop arrow
(For left lane, use mirror image)

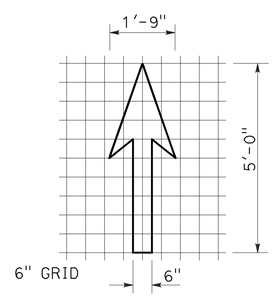

A=3.5 ft^2

BIKE LANE ARROW

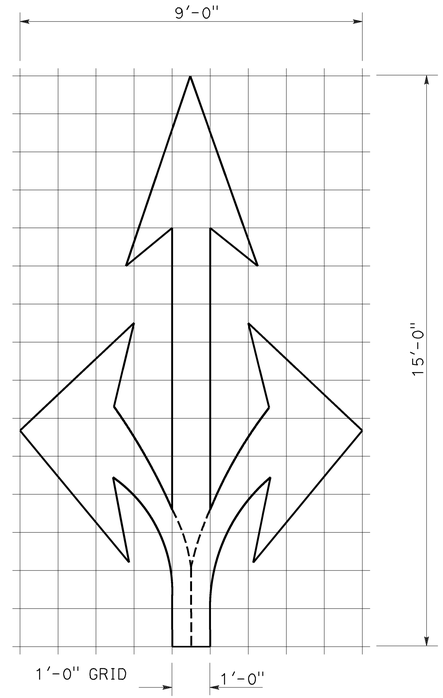

A=36 ft^2

TYPE VIII ARROW

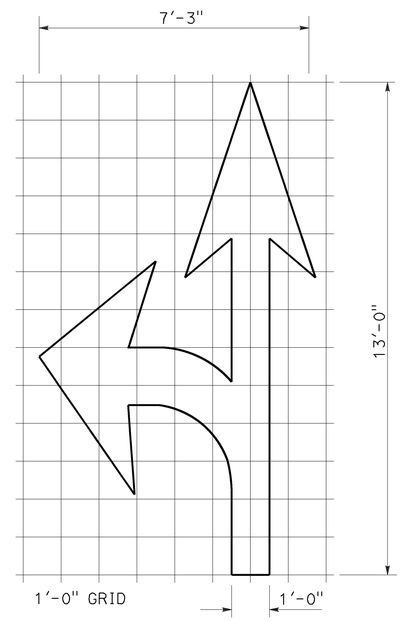

A=27 ft^2

TYPE VII (L) ARROW

(For Type VII (R) arrow, use mirror image)

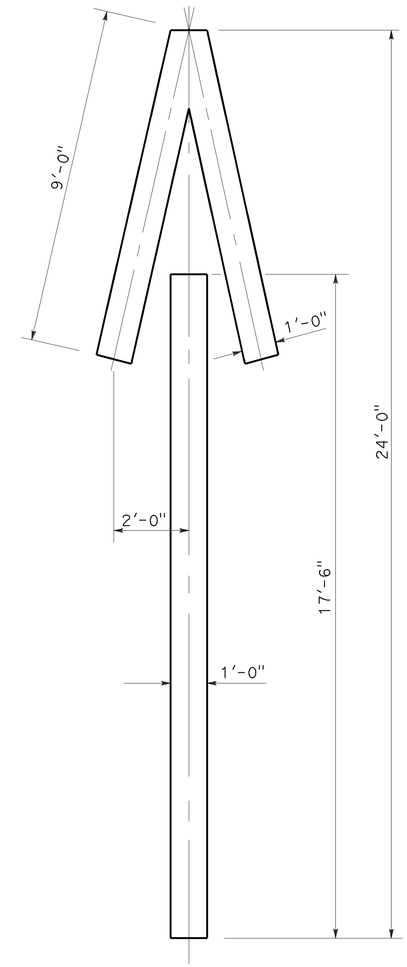

A=33 ft^2

TYPE V ARROW

NOTE:
Minor variations in dimensions may be accepted by the Engineer.

STATE OF CALIFORNIA
DEPARTMENT OF TRANSPORTATION

PAVEMENT MARKINGS ARROWS

NO SCALE

RSP A24A DATED APRIL 20, 2012 SUPERSEDES STANDARD PLAN A24A DATED MAY 20, 2011 - PAGE 13 OF THE STANDARD PLANS BOOK DATED 2010.

REVISED STANDARD PLAN RSP A24A

2010 REVISED STANDARD PLAN RSP A24A

3-14-12

Dist	COUNTY	ROUTE	POST MILES TOTAL PROJECT	SHEET No.	TOTAL SHEETS
07	LA	60	R24.4/R25.3	270	384

REGISTERED CIVIL ENGINEER

October 19, 2012
PLANS APPROVAL DATE

REGISTERED PROFESSIONAL ENGINEER Roberta L. McLaughlin No. C40375 Exp. 3-31-13 CIVIL STATE OF CALIFORNIA

THE STATE OF CALIFORNIA OR ITS OFFICERS OR AGENTS SHALL NOT BE RESPONSIBLE FOR THE ACCURACY OR COMPLETENESS OF SCANNED COPIES OF THIS PLAN SHEET.

NOTE: TO ACCOMPANY PLANS DATED 3-14-16

Minor variations in dimensions may be accepted by the Engineer.

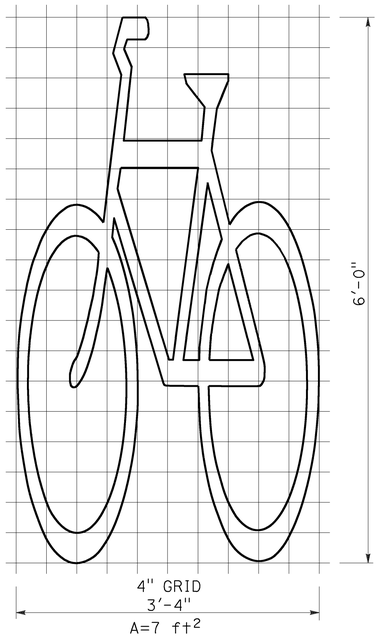

BIKE LANE SYMBOL WITHOUT PERSON

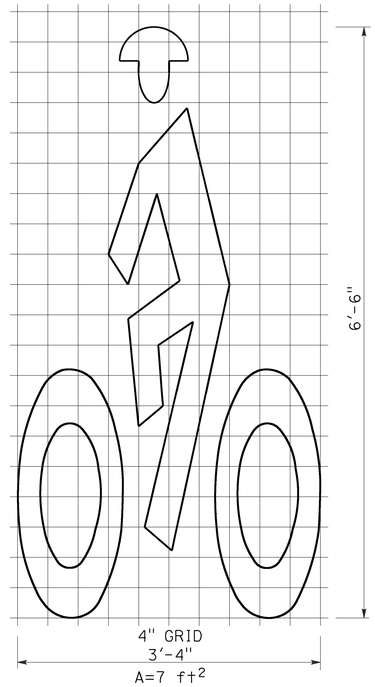

BIKE LANE SYMBOL WITH PERSON

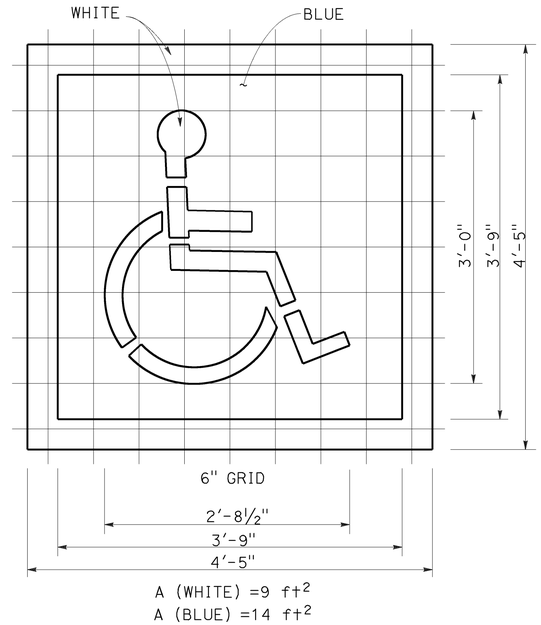

INTERNATIONAL SYMBOL OF ACCESSIBILITY (ISA) MARKING

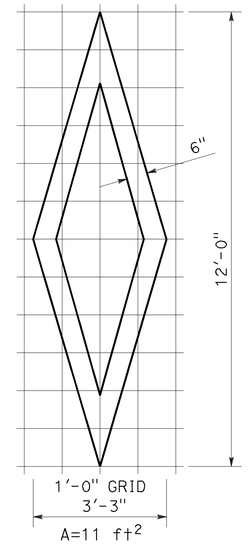

DIAMOND SYMBOL

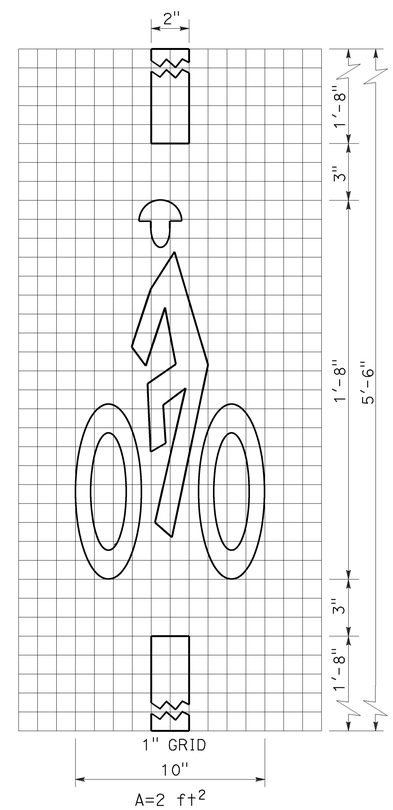

BICYCLE LOOP DETECTOR SYMBOL

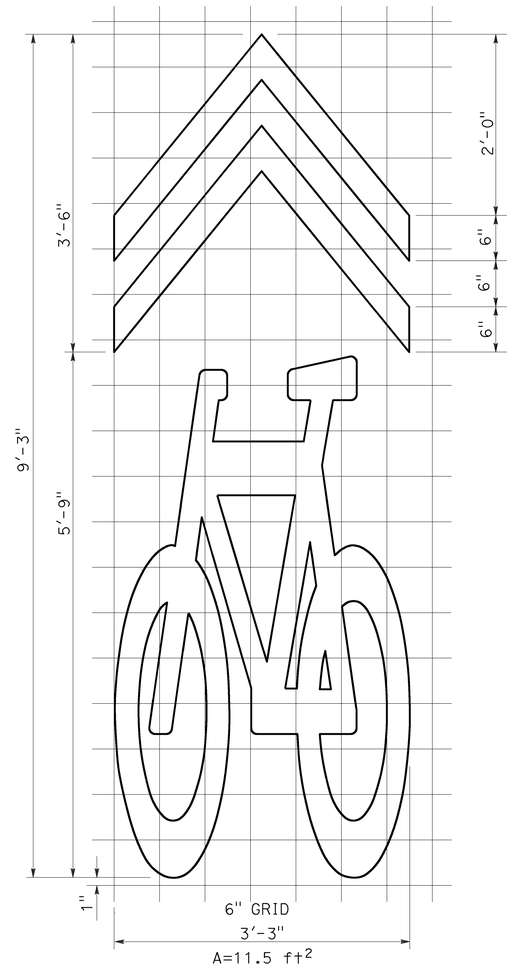

SHARED ROADWAY BICYCLE MARKING

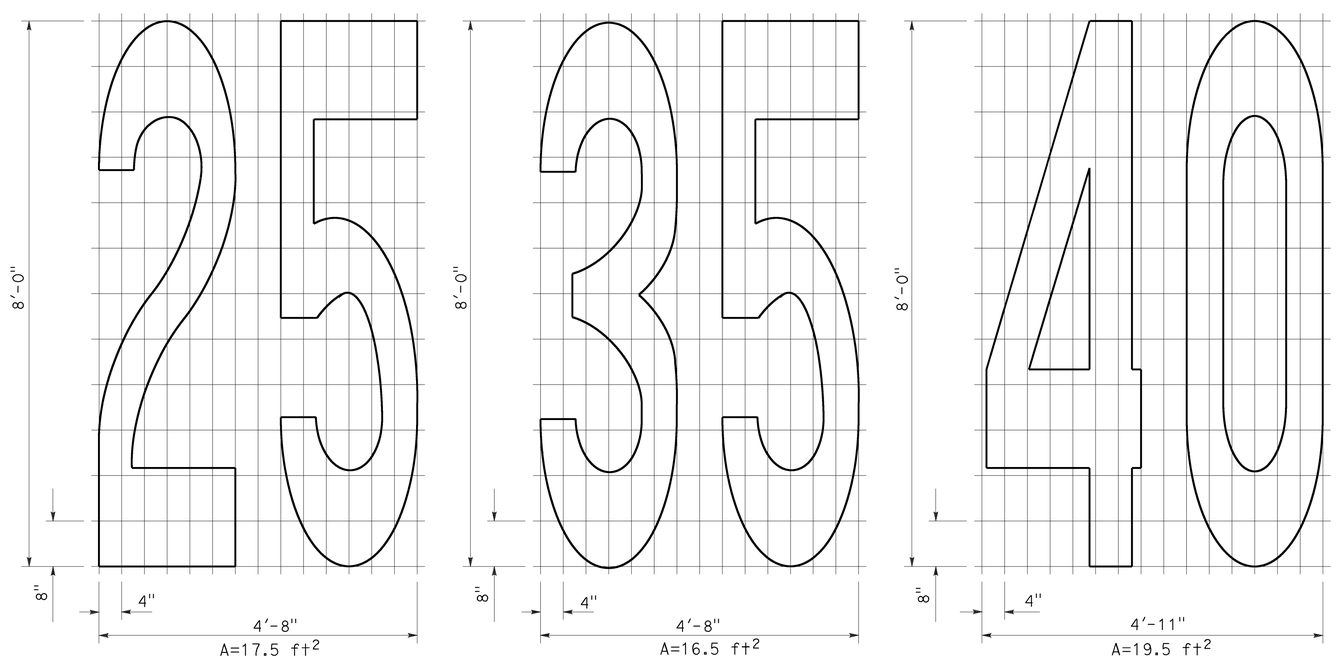

NUMERALS

STATE OF CALIFORNIA
DEPARTMENT OF TRANSPORTATION

PAVEMENT MARKINGS SYMBOLS AND NUMERALS

NO SCALE

RSP A24C DATED OCTOBER 19, 2012 SUPERSEDES STANDARD PLAN A24C DATED MAY 20, 2011 - PAGE 15 OF THE STANDARD PLANS BOOK DATED 2010.

REVISED STANDARD PLAN RSP A24C

2010 REVISED STANDARD PLAN RSP A24C

6-28-12

Dist	COUNTY	ROUTE	POST MILES TOTAL PROJECT	SHEET No.	TOTAL SHEETS
07	LA	60	R24.4/R25.3	271	384

REGISTERED CIVIL ENGINEER

July 20, 2012
PLANS APPROVAL DATE

REGISTERED PROFESSIONAL ENGINEER
Roberta L. McLaughlin
No. C40375
Exp. 3-31-13
CIVIL
STATE OF CALIFORNIA

THE STATE OF CALIFORNIA OR ITS OFFICERS OR AGENTS SHALL NOT BE RESPONSIBLE FOR THE ACCURACY OR COMPLETENESS OF SCANNED COPIES OF THIS PLAN SHEET.

TO ACCOMPANY PLANS DATED 3-14-16

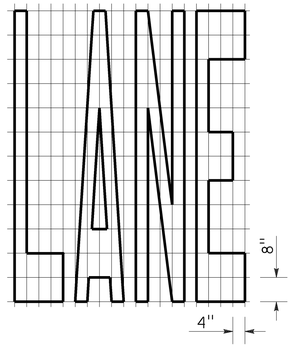

A=24 ft^2

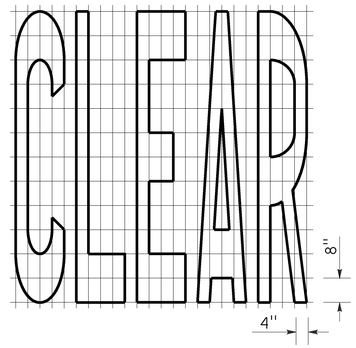

A=27 ft^2

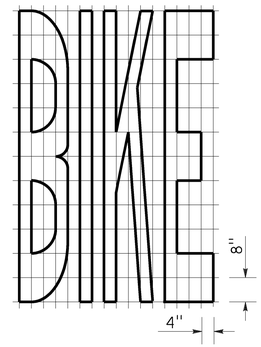

A=21 ft^2

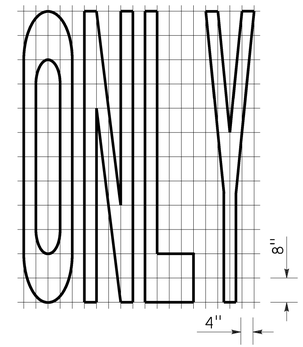

A=22 ft^2

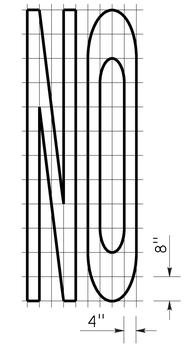

A=14 ft^2

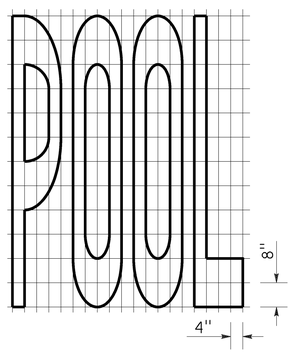

A=23 ft^2

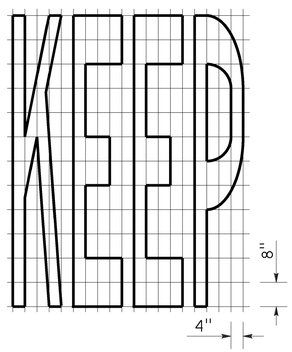

A=24 ft^2

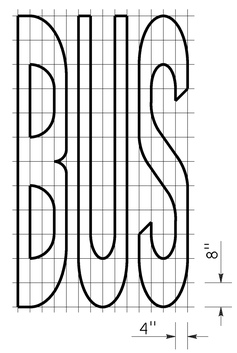

A=20 ft^2

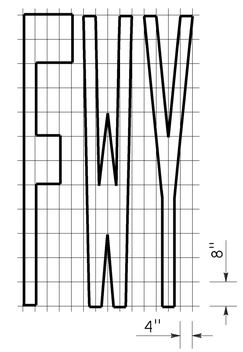

A=16 ft^2

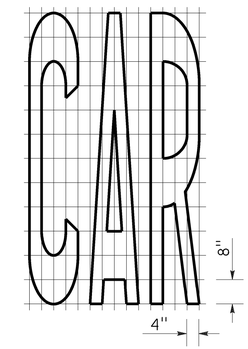

A=17 ft^2

WORD MARKINGS			
ITEM	ft^2	ITEM	ft^2
LANE	24	NO	14
POOL	23	BIKE	21
CAR	17	BUS	20
CLEAR	27	ONLY	22
KEEP	24	FWY	16

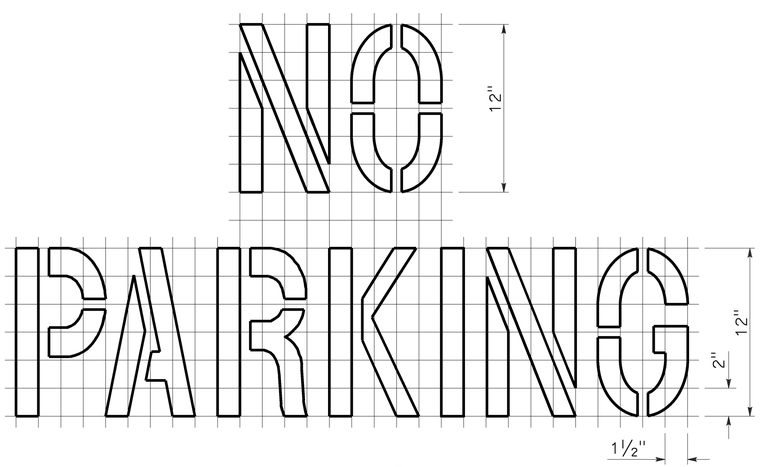

A=2 ft^2
See Notes 6 and 7

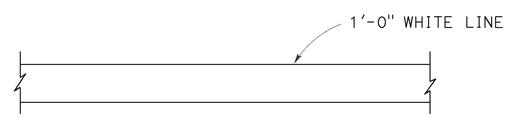

LIMIT LINE (STOP LINE)

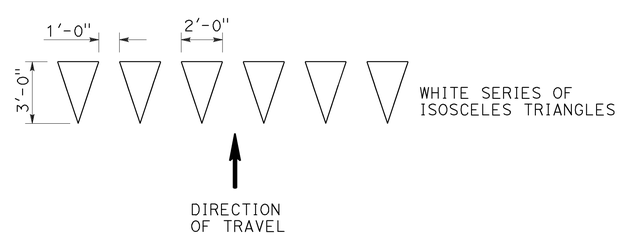

YIELD LINE

NOTES:

1. If a message consists of more than one word, it should read "UP", i.e., the first word should be nearest the driver.
2. The space between words should be at least four times the height of the characters for low speed roads, but not more than ten times the height of the characters. The space may be reduced appropriately where there is limited space because of local conditions.
3. Minor variations in dimensions may be accepted by the Engineer.
4. Portions of a letter, number or symbol may be separated by connecting segments not to exceed 2" in width.
5. The words "NO PARKING" pavement marking is to be used for parking facilities. For typical locations of markings, see Standard Plans A90A and A90B.
6. The words "NO PARKING", shall be painted in white letters no less than 1'-0" high on a contrasting background and located so that it is visible to traffic enforcement officials.

STATE OF CALIFORNIA
DEPARTMENT OF TRANSPORTATION

PAVEMENT MARKINGS WORDS, LIMIT AND YIELD LINES

NO SCALE

RSP A24E DATED JULY 20, 2012 SUPERSEDES STANDARD PLAN A24E
DATED MAY 20, 2011 - PAGE 17 OF THE STANDARD PLANS BOOK DATED 2010.

REVISED STANDARD PLAN RSP A24E

2010 REVISED STANDARD PLAN RSP A24E

6-12-12

Dist	COUNTY	ROUTE	POST MILES TOTAL PROJECT	SHEET No.	TOTAL SHEETS
07	LA	60	R24.4/R25.3	272	384

REGISTERED CIVIL ENGINEER

July 20, 2012
PLANS APPROVAL DATE

REGISTERED PROFESSIONAL ENGINEER
Roberta L. McLaughlin
No. C40375
Exp. 3-31-13
CIVIL
STATE OF CALIFORNIA

THE STATE OF CALIFORNIA OR ITS OFFICERS OR AGENTS SHALL NOT BE RESPONSIBLE FOR THE ACCURACY OR COMPLETENESS OF SCANNED COPIES OF THIS PLAN SHEET.

TO ACCOMPANY PLANS DATED 3-14-16

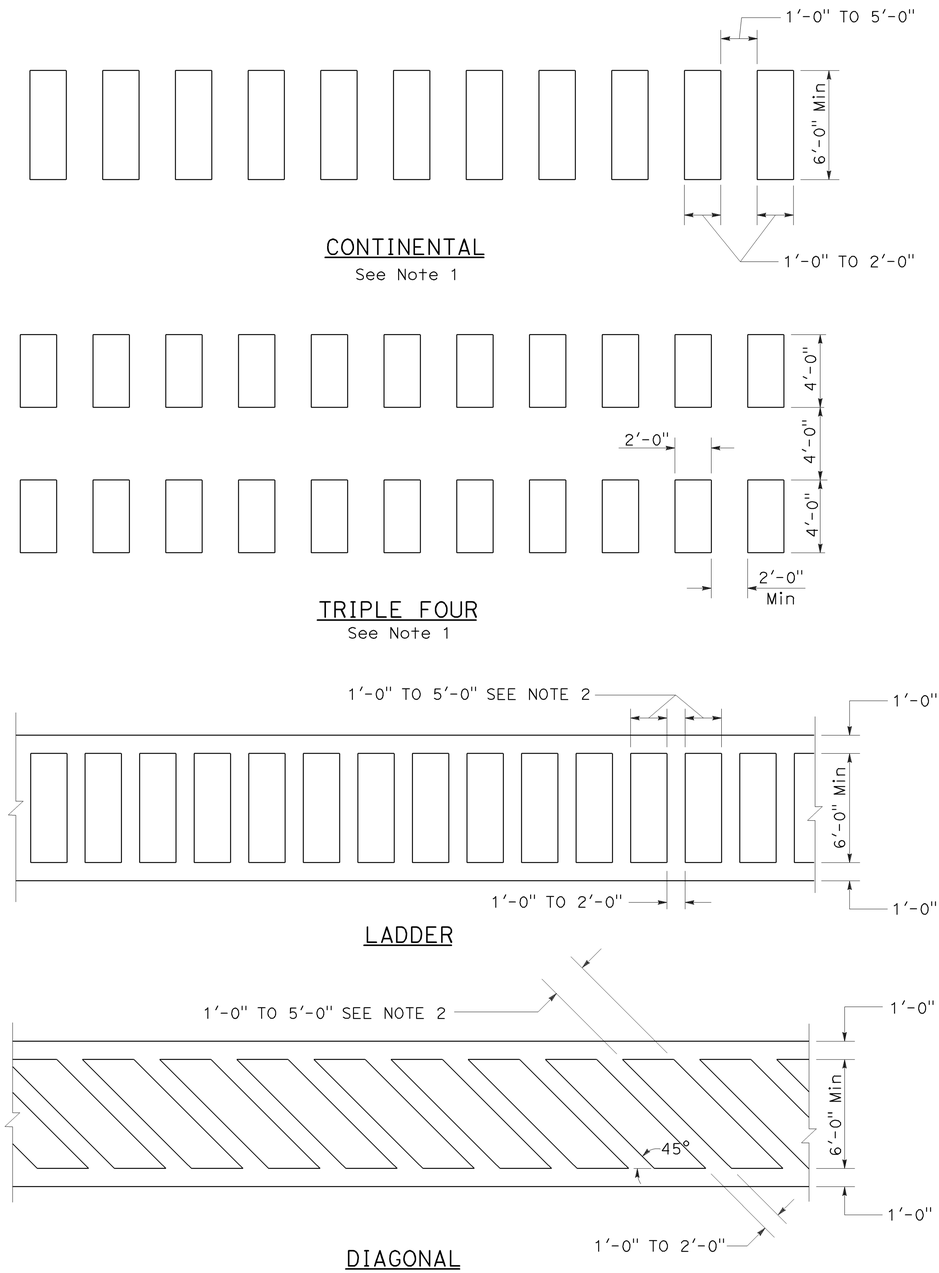

HIGHER VISIBILITY CROSSWALKS

NOTES:

1. Spaces between markings should be placed in wheel tracks of each lane.
2. Spacings not to exceed 2.5 times width of longitudinal line.
3. All crosswalk markings must be white except for those near schools must be yellow.

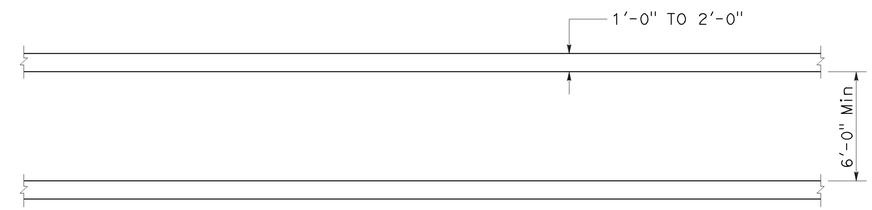

BASIC

STATE OF CALIFORNIA
DEPARTMENT OF TRANSPORTATION

PAVEMENT MARKINGS CROSSWALKS

NO SCALE

RSP A24F DATED JULY 20, 2012 SUPPLEMENTS THE STANDARD PLANS BOOK DATED 2010.

REVISED STANDARD PLAN RSP A24F

2010 REVISED STANDARD PLAN RSP A24F

6-28-12

Dist	COUNTY	ROUTE	POST MILES TOTAL PROJECT	SHEET No.	TOTAL SHEETS
07	LA	60	R24.4/R25.3	273	384

REGISTERED CIVIL ENGINEER

July 18, 2014
PLANS APPROVAL DATE

REGISTERED PROFESSIONAL ENGINEER Carl M. Duan No. C59976 Exp. 6-30-16 CIVIL STATE OF CALIFORNIA

THE STATE OF CALIFORNIA OR ITS OFFICERS OR AGENTS SHALL NOT BE RESPONSIBLE FOR THE ACCURACY OR COMPLETENESS OF SCANNED COPIES OF THIS PLAN SHEET.

TO ACCOMPANY PLANS DATED 3-14-16

DESIGN NOTES:

Design: AASHTO LRFD Bridge Design Specifications, 4th edition with California Amendments. ACPA DESIGN DATA 1, October 2007. INDIRECT DESIGN METHOD

Soil: w Fe = 162 pcf Installation Type 1
w Fe = 168 pcf Installation Types 2 & 3
w = Unit weight of soil (pcf)
Fe = Soil-structure interaction factor

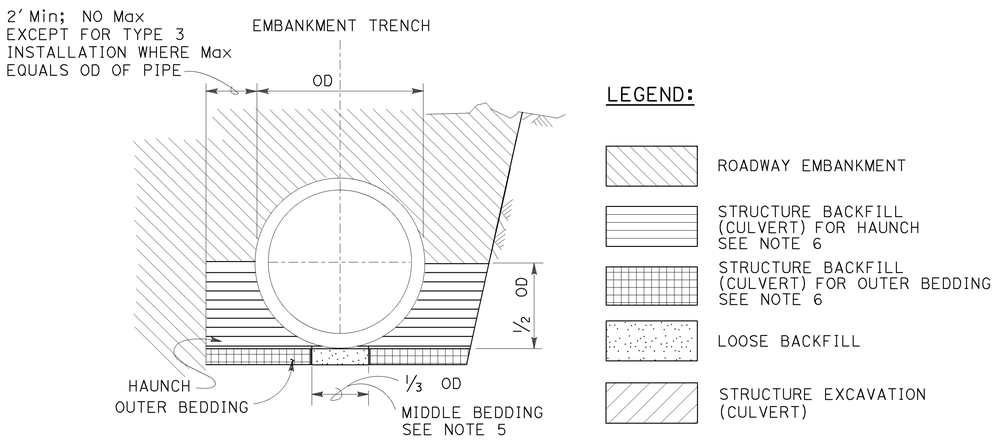

BACKFILL

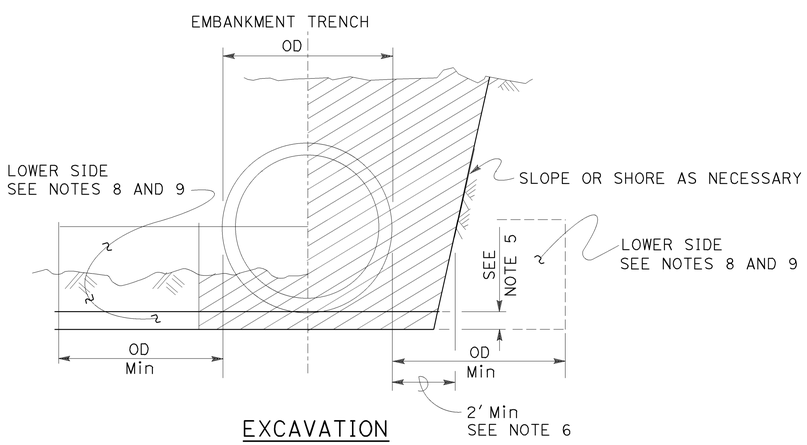

EXCAVATION

INSTALLATION TYPE 1:

The haunch and outer bedding shall be compacted to a minimum 90 percent relative compaction. In addition, the minimum sand equivalent in these areas shall be 30 and the maximum percentage passing the No. 200 sieve size shall be 12.

INSTALLATION TYPE 2:

The haunch and outer bedding shall be compacted to a minimum 90 percent relative compaction. In addition, the minimum sand equivalent in these areas shall be 25.

INSTALLATION TYPE 3:

The haunch and outer bedding shall be compacted to a minimum 85 percent relative compaction. 90 percent relative compaction will be required where the fill over the pipe is less than 4′-0″ or ½ OD. In addition, the minimum sand equivalent in these areas shall be 25 and the material shall not contain rocks, broken concrete, or other solid material exceeding 3″ in greatest dimension.

INSTALLATION TYPE 1

MINIMUM CLASS AND D-LOAD	COVER	
	60″ Dia AND SMALLER	OVER 60″ Dia TO 120″ Dia Max
CLASS II 1000D	14.9′	12.9′
CLASS III 1350D	15.0′ - 21.9′	13.0′ - 18.9′
CLASS III SPECIAL 1700D	22.0′ - 27.9′	19.0′ - 24.9′
CLASS IV 2000D	28.0′ - 32.9′	25.0′ - 29.9′
CLASS IV SPECIAL 2500D	33.0′ - 41.9′	30.0′ - 38.9′
CLASS V 3000D	42.0′ - 49.9′	39.0′ - 46.9′
CLASS V SPECIAL 3600D	50.0′ - 60.0′	47.0′ - 58.0′

INSTALLATION TYPE 2

MINIMUM CLASS AND D-LOAD	COVER	
	60″ Dia AND SMALLER	OVER 60″ Dia TO 120″ Dia Max
CLASS II 1000D	11.9′	9.9′
CLASS III 1350D	12.0′ - 15.9′	10.0′ - 14.9′
CLASS III SPECIAL 1700D	16.0′ - 20.9′	15.0′ - 19.9′
CLASS IV 2000D	21.0′ - 24.9′	20.0′ - 23.9′
CLASS IV SPECIAL 2500D	25.0′ - 31.9′	24.0′ - 30.9′
CLASS V 3000D	32.0′ - 37.9′	31.0′ - 37.9′
CLASS V SPECIAL 3600D	38.0′ - 46.0′	38.0′ - 46.0′

INSTALLATION TYPE 3

MINIMUM CLASS AND D-LOAD	COVER	
	60″ Dia AND SMALLER	OVER 60″ Dia TO 120″ Dia Max
CLASS II 1000D	8.9′	5.9′
CLASS III 1350D	9.0′ - 11.9′	6.0′ - 10.9′
CLASS III SPECIAL 1700D	12.0′ - 15.9′	11.0′ - 13.9′
CLASS IV 2000D	16.0′ - 18.9′	14.0′ - 17.9′
CLASS IV SPECIAL 2500D	19.0′ - 24.9′	18.0′ - 22.9′
CLASS V 3000D	25.0′ - 29.9′	23.0′ - 28.9′
CLASS V SPECIAL 3600D	30.0′ - 36.0′	29.0′ - 35.0′

NOTES:

1. Unless otherwise shown on the plans or specified in the special provision, the Contractor shall have the option of selecting the class of RCP and the type of installation to be used, provided the height of cover does not exceed the value shown for the RCP selected.
   Example: 24″ RCP culvert with maximum cover of 24′-0″ the options are:
   a) Class III Special or stronger with Installation Type 1.
   b) Class IV or stronger with Installation Type 2.
   c) Class IV Special or stronger with Installation Type 3.
   Cover is defined as the maximum vertical distance from top of the pipe to finished grade within the length of any given culvert.
2. The class of RCP and Installation Type selected shall be the same throughout the length of any given culvert.
3. The "length of any culvert" is defined as the culvert between:
   a) Successive drainage structure (inlets, junction boxes, headwalls, etc.).
   b) A drainage structure and the inlet or outlet end of the culvert.
   c) The inlet and outlet end of the culvert when there are no intervening drainage structures.
4. Oval and arch shaped RCP shall not be used.
5. Bedding depth: 1/25 OD Min, not less than 3″.
6. Slurry cement backfill may be substituted for backfill in the outer bedding and haunch areas. If slurry is used, the outer and middle beddings shall be omitted. Prior to installation, the soil under the middle ⅓ of the outside diameter of the pipe shall be softened by scarifying or other means to a minimum depth of 1/25 OD, but not less than 3″. Where slurry cement backfill is used, clear distance to trench wall may be reduced as set forth in the Standard Specifications.
7. Backfill shall be placed full width of excavation except where dimensions are shown for backfill width or thickness. Dimensions shown are minimum.
8. Lower side shall be suitable material as determined by the Engineer. Otherwise it shall be considered unsuitable as set forth in of the Standard Specifications. See Note 9.
9. Where the pipe is placed in a trench, if the trench walls are sloped at 5 vertical to 1 horizontal or steeper for at least 90 percent of the trench height or up to not less than 12″ from the grading plane, the firmness of the soil in the lower side need not be considered.
10. Non-reinforced precast concrete pipe sizes 3′-0″ or smaller may be placed under installation Types 1, 2 or 3.

STATE OF CALIFORNIA
DEPARTMENT OF TRANSPORTATION

EXCAVATION AND BACKFILL CONCRETE PIPE CULVERTS INDIRECT DESIGN METHOD

NO SCALE

RSP A62DA DATED JULY 18, 2014 SUPERSEDES STANDARD PLAN A62DA DATED MAY 20, 2011 - PAGE 24 OF THE STANDARD PLANS BOOK DATED 2010.

REVISED STANDARD PLAN RSP A62DA

2010 REVISED STANDARD PLAN RSP A62DA

Dist	COUNTY	ROUTE	POST MILES TOTAL PROJECT	SHEET No.	TOTAL SHEETS
07	LA	60	R24.4/R25.3	274	384

REGISTERED CIVIL ENGINEER

October 30, 2015
PLANS APPROVAL DATE

REGISTERED PROFESSIONAL ENGINEER
Carl M. Duan
No. C59976
Exp. 6-30-16
CIVIL
STATE OF CALIFORNIA

THE STATE OF CALIFORNIA OR ITS OFFICERS OR AGENTS SHALL NOT BE RESPONSIBLE FOR THE ACCURACY OR COMPLETENESS OF SCANNED COPIES OF THIS PLAN SHEET.

TO ACCOMPANY PLANS DATED 3-14-16

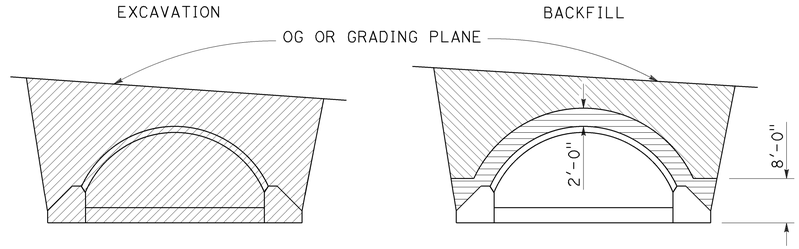

IN TRENCH

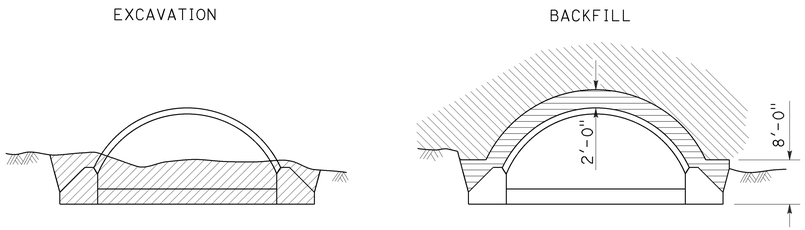

IN EMBANKMENT

STRUCTURAL STEEL PLATE ARCHES

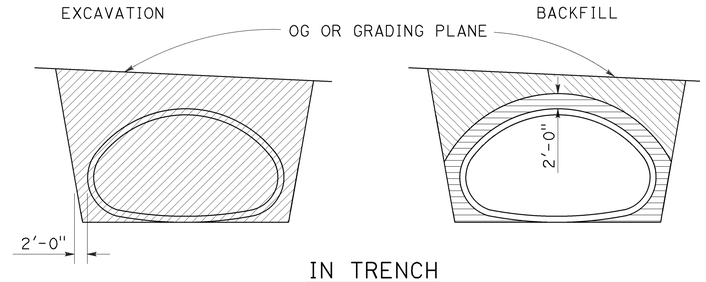

IN TRENCH

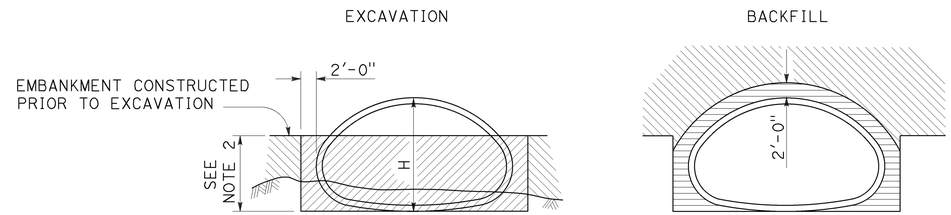

IN EMBANKMENT

STRUCTURAL STEEL PLATE PIPE ARCHES AND VEHICULAR UNDERCROSSING

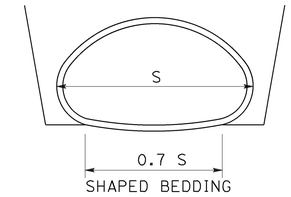

SHAPED BEDDING

S = Larger than 84"

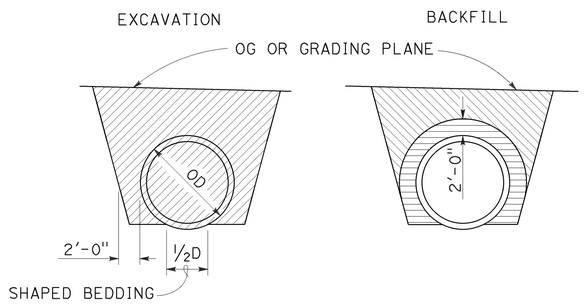

IN TRENCH

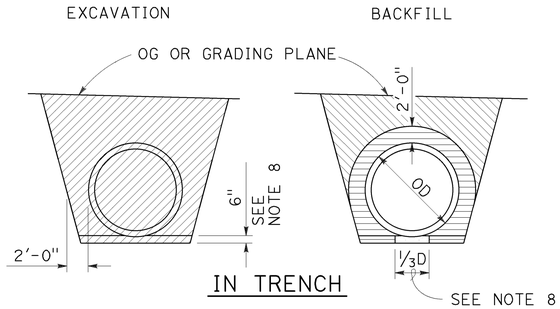

IN TRENCH

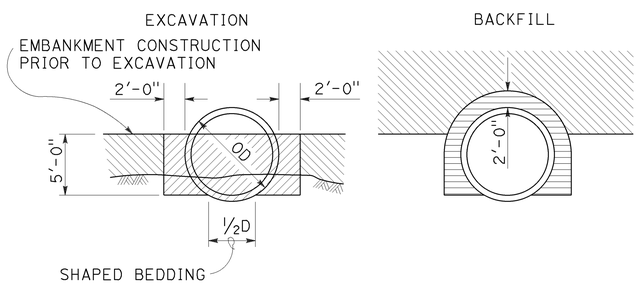

IN EMBANKMENT

PIPES

Larger than 84"

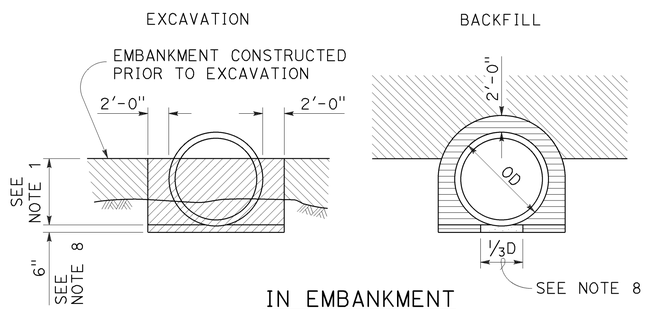

IN EMBANKMENT

METAL AND PLASTIC PIPES AND CORRUGATED METAL PIPE ARCHES

84" or Smaller

NOTES:

1. PIPES: 30" minimum for diameters up to and including 42" then ⅔ diameter but no more than 60" required. CORRUGATED METAL PIPE ARCHES: 30" maximum.
2. ⅔ H up to 60" maximum.
3. Slope or shore excavation sides as necessary.
4. Backfill shall be placed full width of excavation except as noted.
5. Diagrams do not apply to overside drains.
6. Dimensions shown are minimum.
7. Construction strutting of structural steel plate pipe, arches and vehicular undercrossing to be used when shown on the project plans. When shown, see Standard Plan D88A for strutting requirements.
8. Excavation below pipe and 80% relative compaction requirements for plastic pipes only.
9. D is the inside diameter (ID) of the pipe.

LEGEND

- STRUCTURE EXCAVATION (CULVERT)
- ROADWAY EMBANKMENT
- STRUCTURE BACKFILL (CULVERT) 95% RELATIVE COMPACTION
- STRUCTURE BACKFILL (CULVERT) 80% RELATIVE COMPACTION

STATE OF CALIFORNIA
DEPARTMENT OF TRANSPORTATION

EXCAVATION AND BACKFILL METAL AND PLASTIC CULVERTS

NO SCALE

RSP A62F DATED OCTOBER 30, 2015 SUPERSEDES STANDARD PLAN A62F DATED MAY 20, 2011 - PAGE 26 OF THE STANDARD PLANS BOOK DATED 2010.

REVISED STANDARD PLAN RSP A62F

2010 REVISED STANDARD PLAN RSP A62F

10-13-15

Dist	COUNTY	ROUTE	POST MILES TOTAL PROJECT	SHEET No.	TOTAL SHEETS
07	LA	60	R24.4/R25.3	275	384

Randell D. Hiatt
REGISTERED CIVIL ENGINEER

October 30, 2015
PLANS APPROVAL DATE

REGISTERED PROFESSIONAL ENGINEER
Randell D. Hiatt
No. C50200
Exp. 6-30-17
CIVIL
STATE OF CALIFORNIA

THE STATE OF CALIFORNIA OR ITS OFFICERS OR AGENTS SHALL NOT BE RESPONSIBLE FOR THE ACCURACY OR COMPLETENESS OF SCANNED COPIES OF THIS PLAN SHEET.

TO ACCOMPANY PLANS DATED 3-14-16

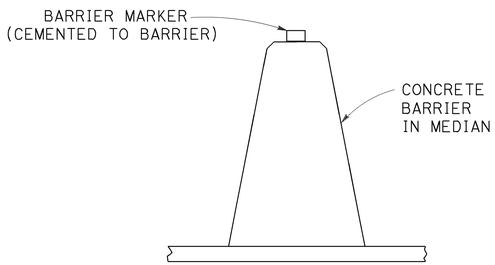

CONCRETE BARRIER TYPE 60 DELINEATION

See Note 5

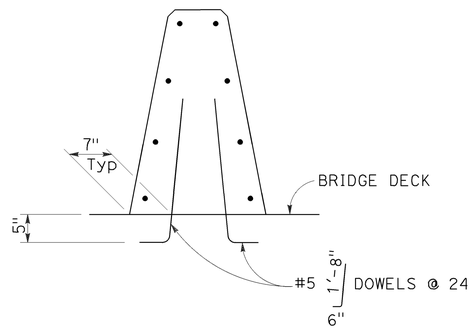

CONCRETE BARRIER TYPE 60A

Details similar to Type 60 except as noted.

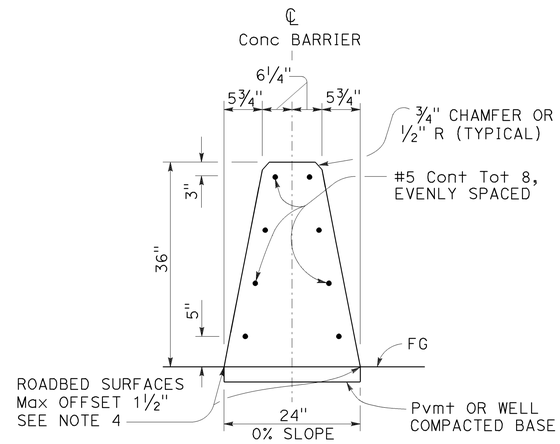

CONCRETE BARRIER TYPE 60

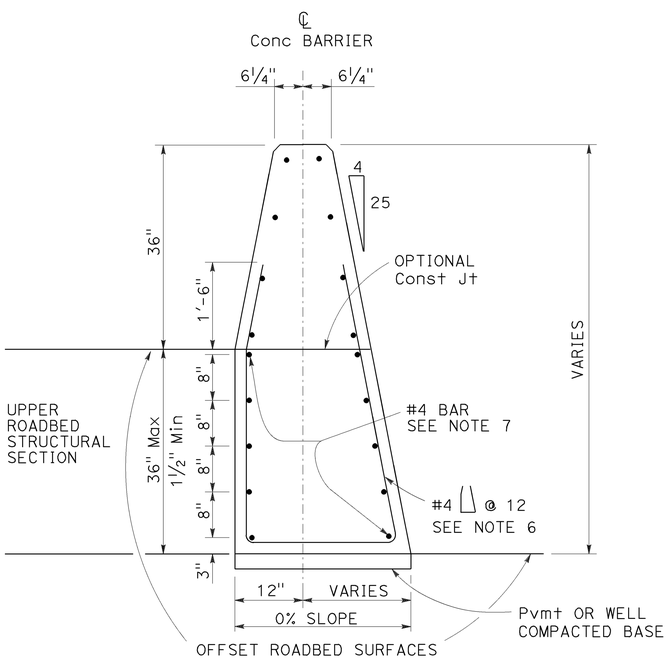

CONCRETE BARRIER TYPE 60C

Details similar to Type 60 except as noted.
Use concrete barrier end anchor when necessary.
36" roadbed surfaces offset shown.

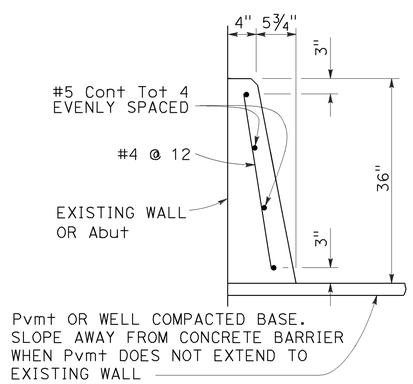

CONCRETE BARRIER TYPE 60D

NOTES:

1. See Standard Plan A76B for details of Concrete Barrier Type 60 end anchors, connection to structures and transitions to Concrete Barrier Type 50 and Concrete Barrier Type 60S.
2. See Revised Standard Plan RSP A76C for Concrete Barrier Type 60 transitions at bridge column and sign pedestals.
3. Where glare screen is required on Concrete Barrier Type 60, use Concrete Barrier Type 60G.
4. Where roadbed offset is greater than 1½", see Concrete Barrier Type 60C.
5. See Project Plans for barrier delineation locations.
6. Reinforcing stirrup not required for roadbed offsets less than 1'-0".
7. For roadbed surfaces offset greater than 1½" and less than or equal to 3", no reinforcement required. For roadbed surfaces offset greater than 3" and less than or equal to 8", use two #4 Reinf at 3" above the lower roadbed surface. For roadbed surfaces offset greater than 8" and less than or equal to 12", use two #4 Reinf at 3" above the lower roadbed surface and two #4 Reinf at 8" above the lower roadbed surface. For roadbed surfaces offset greater than 12" and less than or equal to 36", use two #4 Reinf at 3" above the lower roadbed surface and two #4 Reinf at every 8" increment vertical spacing above the first two #4 Reinf.

STATE OF CALIFORNIA
DEPARTMENT OF TRANSPORTATION

CONCRETE BARRIER TYPE 60

NO SCALE

RSP A76A DATED OCTOBER 30, 2015 SUPERSEDES STANDARD PLAN A76A DATED MAY 20, 2011 - PAGE 34 OF THE STANDARD PLANS BOOK DATED 2010.

REVISED STANDARD PLAN RSP A76A

2010 REVISED STANDARD PLAN RSP A76A

10-7-15

Dist	COUNTY	ROUTE	POST MILES TOTAL PROJECT	SHEET No.	TOTAL SHEETS
07	LA	60	R24.4/R25.3	276	384

Randell D. Hiatt
REGISTERED CIVIL ENGINEER

July 19, 2013
PLANS APPROVAL DATE

REGISTERED PROFESSIONAL ENGINEER Randell D. Hiatt No. C50200 Exp. 6-30-15 CIVIL STATE OF CALIFORNIA

THE STATE OF CALIFORNIA OR ITS OFFICERS OR AGENTS SHALL NOT BE RESPONSIBLE FOR THE ACCURACY OR COMPLETENESS OF SCANNED COPIES OF THIS PLAN SHEET.

TO ACCOMPANY PLANS DATED 3-14-16

2010 REVISED STANDARD PLAN RSP A77L1

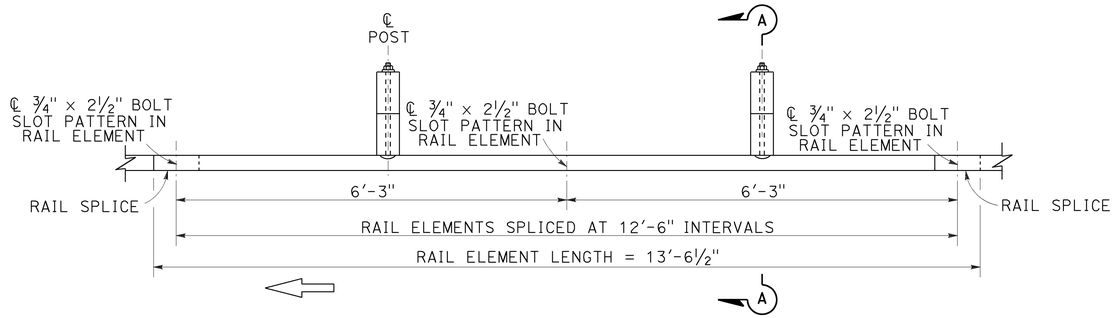

PLAN

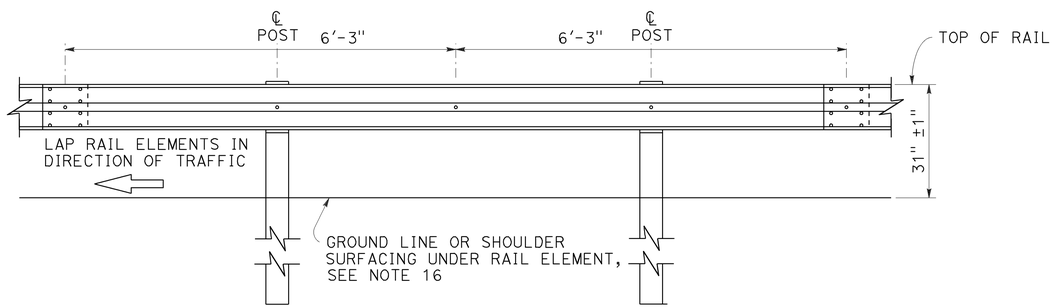

ELEVATION

MIDWEST GUARDRAIL SYSTEM WITH WOOD POST AND BLOCKS

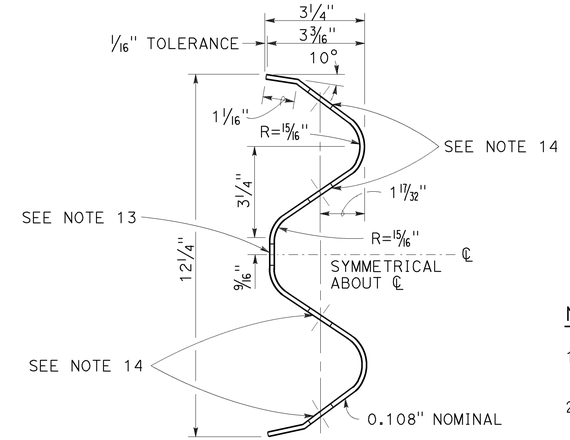

SECTION THRU RAIL ELEMENT

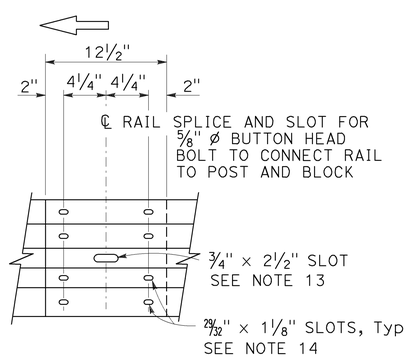

ELEVATION

RAIL ELEMENT SPLICE DETAIL

a) Connect the over lapped end of the rail elements with ⅝" ø × 1⅜" button head oval shoulder splice bolts inserted into the 29⁄32" × 1⅛" slots and bolted together with ⅝" ø recessed hex nuts. Recess of hex nut points toward rail element. A total of 8 bolts and nuts are to be used at each rail splice connection.

b) The ends of the rail elements are to be overlapped in the direction of traffic (see details).

c) Where end cap is to be attached to the end of a rail element, a total of 4 of the above described splice bolts and nuts are to be used.

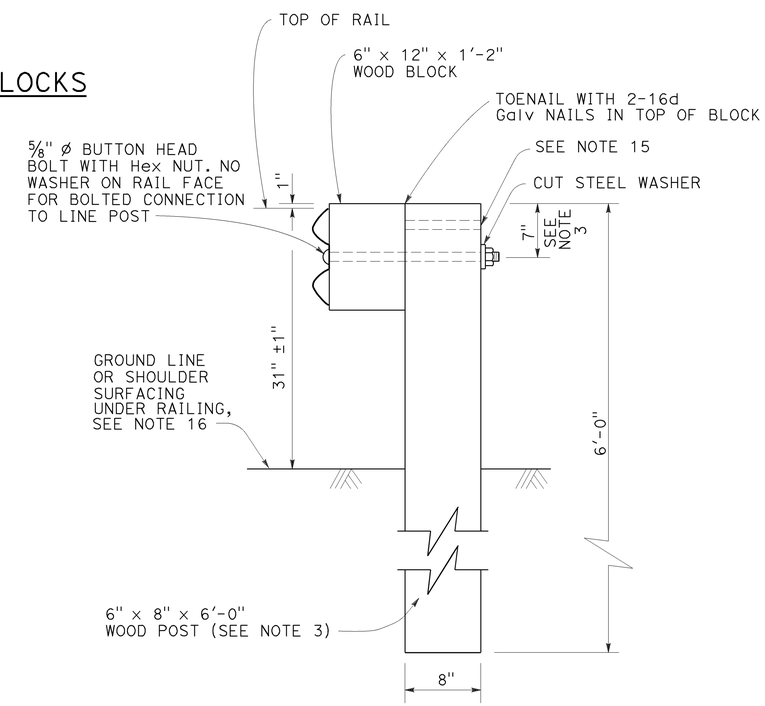

SECTION A-A

TYPICAL WOOD LINE POST INSTALLATION

See Note 4

NOTES:

1. For details of steel post installations, see Revised Standard Plan RSP A77L2.
2. For details of standard hardware used to construct MGS, see Revised Standard Plan RSP A77M1.
3. For details of wood posts and wood blocks used to construct MGS, see Revised Standard Plan RSP A77N1.
4. For additional installation details, see Revised Standard Plan RSP A77N3.
5. MGS post spacing to be 6'-3" center to center, except as otherwise noted.
6. For MGS typical layouts, see the A77P, A77Q and A77R Series of Standard Plans.
7. If railing is connected to terminal system end treatment, use 31" height terminal system end treatment.
8. For MGS end anchor details, see Revised Standard Plans RSP A77S1 and RSP A77T2.
9. For details of MGS transition to bridge railing, see Revised Standard Plan RSP A77U4.
10. For additional details of MSG connection to bridge railing, see Revised Standard Plans RSP A77U1, RSP A77U2 and RSP A77V1.
11. For MGS connection details to abutments and walls, see Revised Standard Plan RSP A77U3.
12. For typical MGS delineation and dike positioning details, see Revised Standard Plan RSP A77N4.
13. Slotted hole for bolted connection of rail element to block and post. See "Section Thru Rail Element".
14. Slotted holes for splice bolts to overlap ends of rail element. See "Section Thru Rail Element".
15. Additional hole in uppermost portion of line post is for potential future adjustments of railing height. See Revised Standard Plan RSP A77N1.
16. Install posts in soil.

STATE OF CALIFORNIA
DEPARTMENT OF TRANSPORTATION

MIDWEST GUARDRAIL SYSTEM STANDARD RAILING SECTION (WOOD POST WITH WOOD BLOCK)

NO SCALE

RSP A77L1 DATED JULY 19, 2013 SUPPLEMENTS STANDARD PLANS BOOK DATED 2010.

REVISED STANDARD PLAN RSP A77L1

Dist	COUNTY	ROUTE	POST MILES TOTAL PROJECT	SHEET No.	TOTAL SHEETS
07	LA	60	R24.4/R25.3	277	384

Randell D. Hiatt
REGISTERED CIVIL ENGINEER

July 19, 2013
PLANS APPROVAL DATE

REGISTERED PROFESSIONAL ENGINEER
Randell D. Hiatt
No. C50200
Exp. 6-30-15
CIVIL
STATE OF CALIFORNIA

THE STATE OF CALIFORNIA OR ITS OFFICERS OR AGENTS SHALL NOT BE RESPONSIBLE FOR THE ACCURACY OR COMPLETENESS OF SCANNED COPIES OF THIS PLAN SHEET.

TO ACCOMPANY PLANS DATED 3-14-16

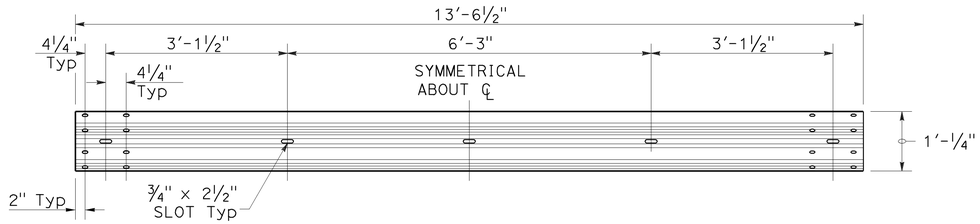

TYPICAL RAIL ELEMENT

NOTE:

1. Slotted holes for splice bolts to overlap ends of rail element.

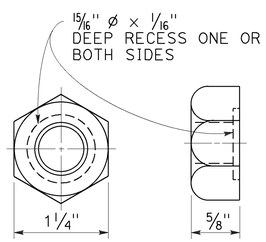

⅝" ø RECESS NUT

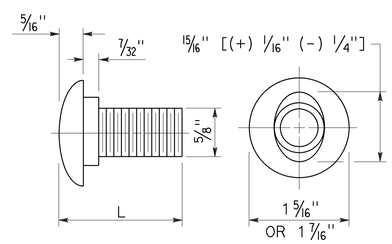

⅝" ø BUTTON HEAD BOLT

BUTTON HEAD BOLT

L	THREAD LENGTH
1⅜"	FULL THREAD LENGTH
2"	FULL THREAD LENGTH
10"	4" Min THREAD LENGTH
18"	4" Min THREAD LENGTH
20"	4" Min THREAD LENGTH
22"	4" Min THREAD LENGTH
26"	4" Min THREAD LENGTH
36"	4" Min THREAD LENGTH
** 2¾"	2" Min THREAD LENGTH
** 19"	4" Min THREAD LENGTH

** For nested rail applications.

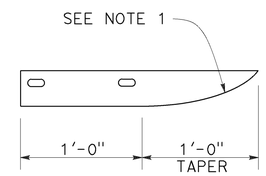

PLAN

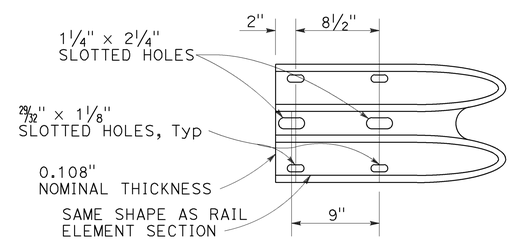

ELEVATION

END CAP (TYPE A)

STATE OF CALIFORNIA
DEPARTMENT OF TRANSPORTATION

MIDWEST GUARDRAIL SYSTEM STANDARD HARDWARE

NO SCALE

RSP A77M1 DATED JULY 19, 2013 SUPPLEMENTS THE STANDARD PLANS BOOK DATED 2010.

REVISED STANDARD PLAN RSP A77M1

2010 REVISED STANDARD PLAN RSP A77M1

7-3-13

Dist	COUNTY	ROUTE	POST MILES TOTAL PROJECT	SHEET No.	TOTAL SHEETS
07	LA	60	R24.4/R25.3	278	384

Randell D. Hiatt
REGISTERED CIVIL ENGINEER

July 19, 2013
PLANS APPROVAL DATE

REGISTERED PROFESSIONAL ENGINEER
Randell D. Hiatt
No. C50200
Exp. 6-30-15
CIVIL
STATE OF CALIFORNIA

THE STATE OF CALIFORNIA OR ITS OFFICERS OR AGENTS SHALL NOT BE RESPONSIBLE FOR THE ACCURACY OR COMPLETENESS OF SCANNED COPIES OF THIS PLAN SHEET.

TO ACCOMPANY PLANS DATED 3-14-16

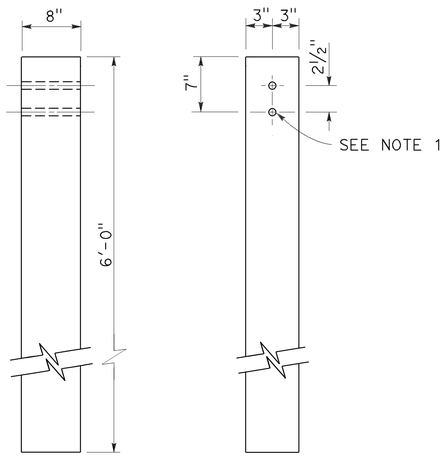

SIDE FRONT

6" x 8" WOOD POST
See Note 3

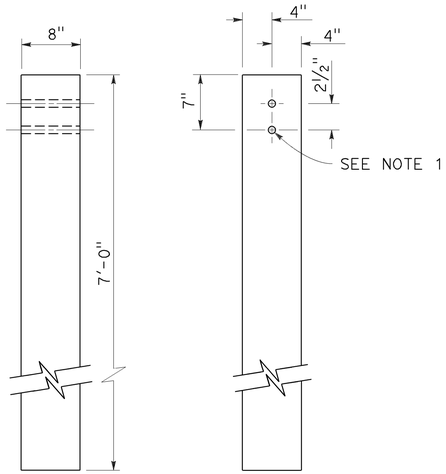

SIDE FRONT

8" x 8" WOOD POST
See Note 4

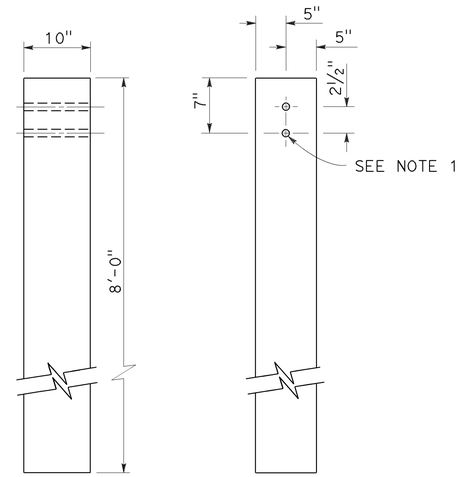

SIDE FRONT

10" x 10" WOOD POST
See Note 5

NOTES:

1. All holes in wood posts and blocks shall be 3/4" Dia ± 1/16".
2. Dimensions shown for wood post are nominal.
3. This post and block combination used for standard line post sections of MGS.
4. This post and 8" x 12" block combination used for line post sections of MGS on narrow roadways.
5. This post and 8" x 12" block combination is typically used where strengthened line post sections of MGS are warranted to shield fixed objects.
6. See Revised Standard Plan RSP A77L3 for use of 6" x 8" and 8" x 8" wood blocks.

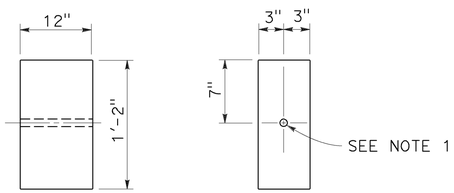

SIDE FRONT

6" x 12" WOOD BLOCK
See Note 3

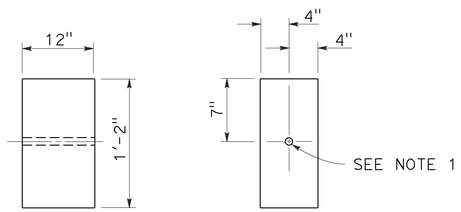

SIDE FRONT

8" x 12" WOOD BLOCK

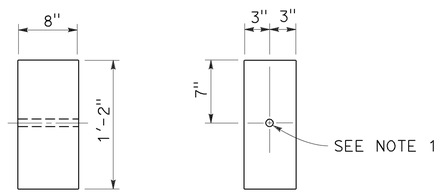

SIDE FRONT

6" x 8" WOOD BLOCK
Only for use with metal beam guard rail see Note 6

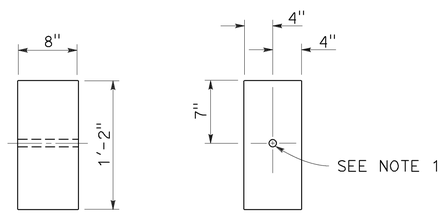

SIDE FRONT

8" x 8" WOOD BLOCK
Only for use with metal beam guard rail see Note 6

STATE OF CALIFORNIA
DEPARTMENT OF TRANSPORTATION

MIDWEST GUARDRAIL SYSTEM WOOD POST AND WOOD BLOCK DETAILS

NO SCALE

RSP A77N1 DATED JULY 19, 2013 SUPPLEMENTS THE STANDARD PLANS BOOK DATED 2010.

REVISED STANDARD PLAN RSP A77N1

2010 REVISED STANDARD PLAN RSP A77N1

7-3-13

Dist	COUNTY	ROUTE	POST MILES TOTAL PROJECT	SHEET No.	TOTAL SHEETS
07	LA	60	R24.4/R25.3	279	384

Randell D. Hiatt
REGISTERED CIVIL ENGINEER

November 15, 2013
PLANS APPROVAL DATE

REGISTERED PROFESSIONAL ENGINEER
Randell D. Hiatt
No. C50200
Exp. 6-30-15
CIVIL
STATE OF CALIFORNIA

THE STATE OF CALIFORNIA OR ITS OFFICERS OR AGENTS SHALL NOT BE RESPONSIBLE FOR THE ACCURACY OR COMPLETENESS OF SCANNED COPIES OF THIS PLAN SHEET.

TO ACCOMPANY PLANS DATED 3-14-16

2010 REVISED STANDARD PLAN RSP A77N3

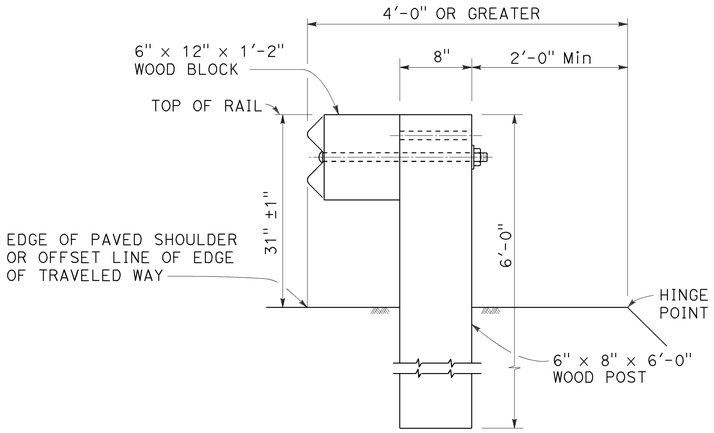

DETAIL A

TYPICAL ROADWAY INSTALLATION

See Note 1

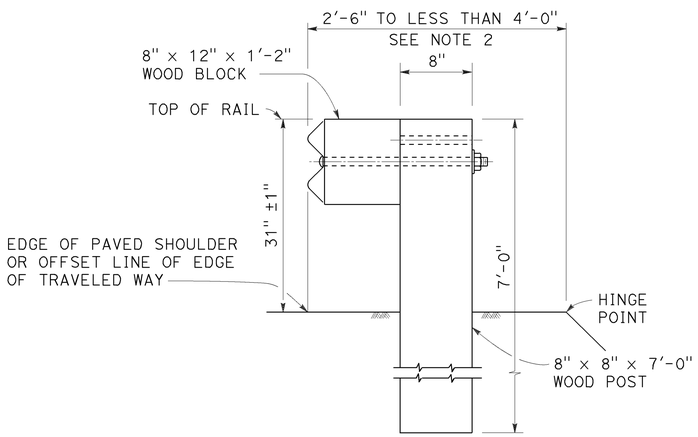

DETAIL B

NARROW ROADWAY INSTALLATION

See Note 1

POST EMBEDMENT

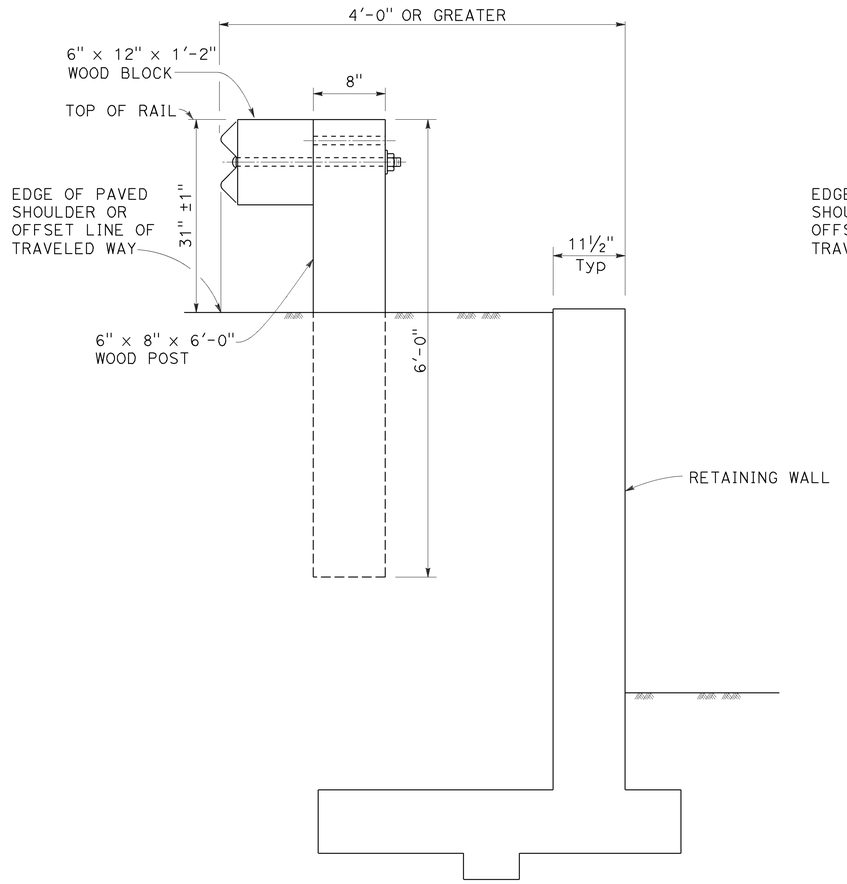

DETAIL C

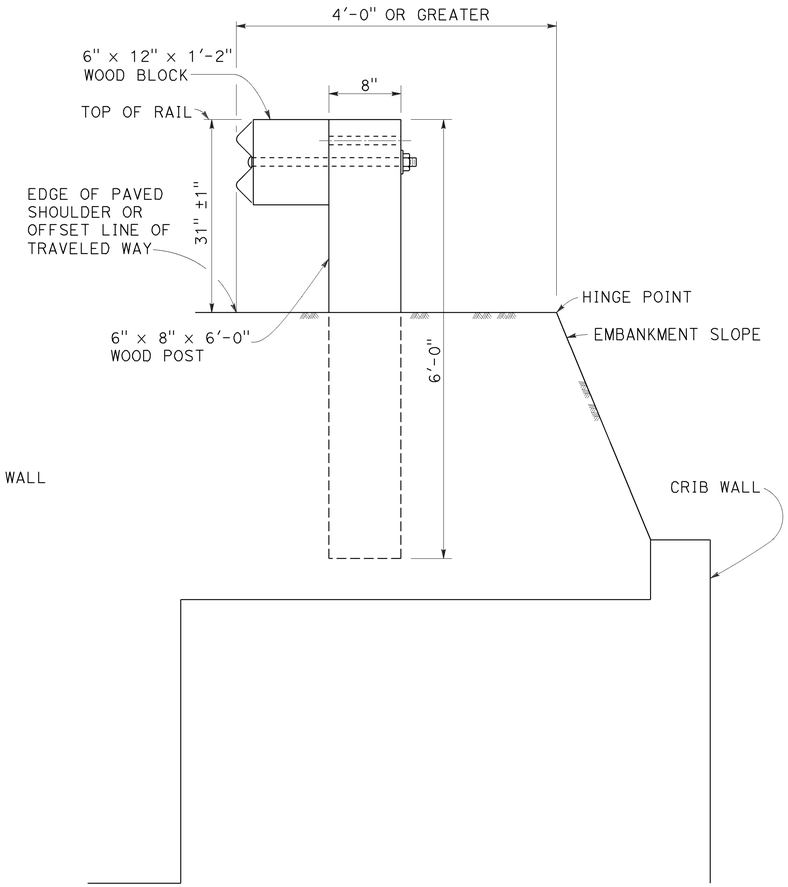

DETAIL D

INSTALLATION AT EARTH RETAINING WALLS

NOTES:

1. These installation details also applicable to steel line post installations. For Detail A, C, and D, where steel line post installations are constructed, W6 x 8.5 or W6 x 9 steel post, 6'-0" in length, with 6" x 12" x 1'-2" notched wood blocks or notched recycled plastic blocks are to be used in place of the size of wood post and wood block shown. For Detail B, where steel line post installations are constructed, W6 x 15 steel post, 8'-0" in length, with 8" x 12" x 1'-2" notched wood blocks or notched recycled plastic blocks are to be used in place of the size of wood post and wood block shown. For additional installation details, see Revised Standard Plan RSP A77L1 and RSP A77L2.
2. Where the distance between the face of the rail and the hinge point is less than 2'-6", see the Project Plans for special details.
3. For dike positioning with MGS installations, see Revised Standard Plan RSP A77N4.

STATE OF CALIFORNIA
DEPARTMENT OF TRANSPORTATION

MIDWEST GUARDRAIL SYSTEM TYPICAL LINE POST EMBEDMENT AND HINGE POINT OFFSET DETAILS

NO SCALE

RSP A77N3 DATED NOVEMBER 15, 2013 SUPERSEDES RSP A77N3
DATED JULY 19, 2013 THAT SUPPLEMENTS THE STANDARD PLANS BOOK DATED 2010.

REVISED STANDARD PLAN RSP A77N3

10-29-13

Dist	COUNTY	ROUTE	POST MILES TOTAL PROJECT	SHEET No.	TOTAL SHEETS
07	LA	60	R24.4/R25.3	280	384

Randell D. Hiatt
REGISTERED CIVIL ENGINEER

July 19, 2013
PLANS APPROVAL DATE

REGISTERED PROFESSIONAL ENGINEER
Randell D. Hiatt
No. C50200
Exp. 6-30-15
CIVIL
STATE OF CALIFORNIA

THE STATE OF CALIFORNIA OR ITS OFFICERS OR AGENTS SHALL NOT BE RESPONSIBLE FOR THE ACCURACY OR COMPLETENESS OF SCANNED COPIES OF THIS PLAN SHEET.

TO ACCOMPANY PLANS DATED 3-14-16

NOTES:

1. When necessary to place dike more than 7" in front of face of MGS, only Type C dike may be used. For dike details, see Revised Standard Plan RSP A87B.
2. For standard railing post embedment, see Revised Standard Plan RSP A77N3.
3. MGS delineation to be used where shown on the Project Plans.
4. When dike or curb is placed under MGS, the maximum height of the dike or curb shall be 6". Mountable dike should not be used. For dike and curb details, see Revised Standard Plans RSP A87A and RSP A87B.
5. For details of typical distance between the face of rail and hinge point, see Revised Standard Plan RSP A77N3.
6. For steel line posts, use 1/4 - 20 self-tapping screws in 0.22" diameter holes or 1/4" bolts in 9/32" diameter holes.

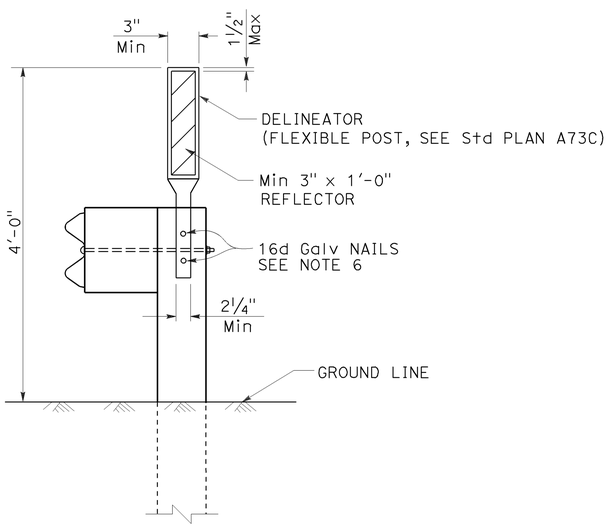

MGS DELINEATION
See Note 3

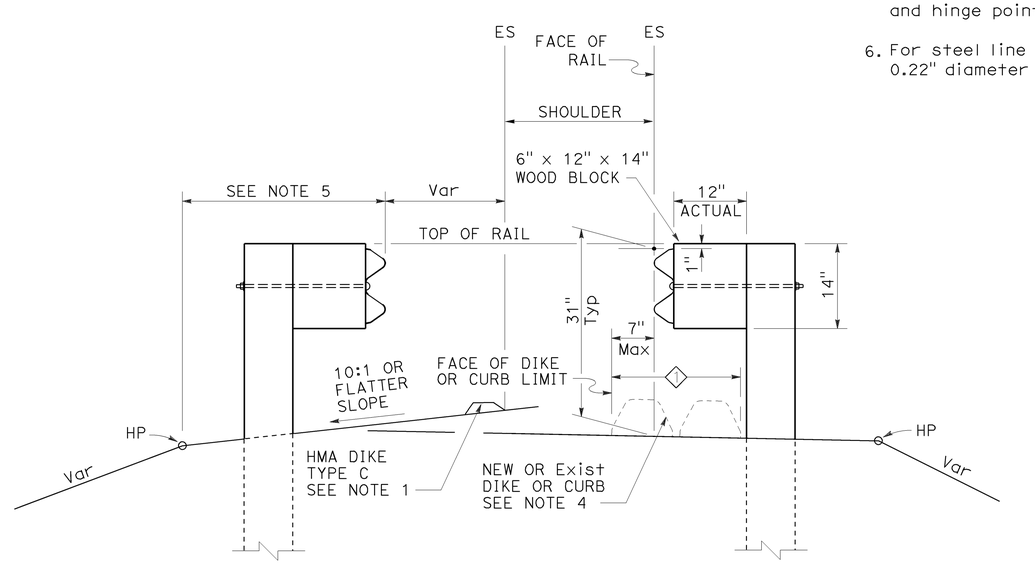

DIKE POSITIONING
See Note 1

1 PERMISSIBLE DIKE OR CURB PLACEMENT AREA

STATE OF CALIFORNIA
DEPARTMENT OF TRANSPORTATION

MIDWEST GUARDRAIL SYSTEM TYPICAL RAILING DELINEATION AND DIKE POSITIONING DETAILS

NO SCALE

RSP A77N4 DATED JULY 19, 2013 SUPPLEMENTS THE STANDARD PLANS BOOK DATED 2010.

REVISED STANDARD PLAN RSP A77N4

2010 REVISED STANDARD PLAN RSP A77N4

7-10-13

Dist	COUNTY	ROUTE	POST MILES TOTAL PROJECT	SHEET No.	TOTAL SHEETS
07	LA	60	R24.4/R25.3	281	384

Randell D. Hiatt
REGISTERED CIVIL ENGINEER

July 19, 2013
PLANS APPROVAL DATE

REGISTERED PROFESSIONAL ENGINEER
Randell D. Hiatt
No. C50200
Exp. 6-30-15
CIVIL
STATE OF CALIFORNIA

THE STATE OF CALIFORNIA OR ITS OFFICERS OR AGENTS SHALL NOT BE RESPONSIBLE FOR THE ACCURACY OR COMPLETENESS OF SCANNED COPIES OF THIS PLAN SHEET.

TO ACCOMPANY PLANS DATED 3-14-16

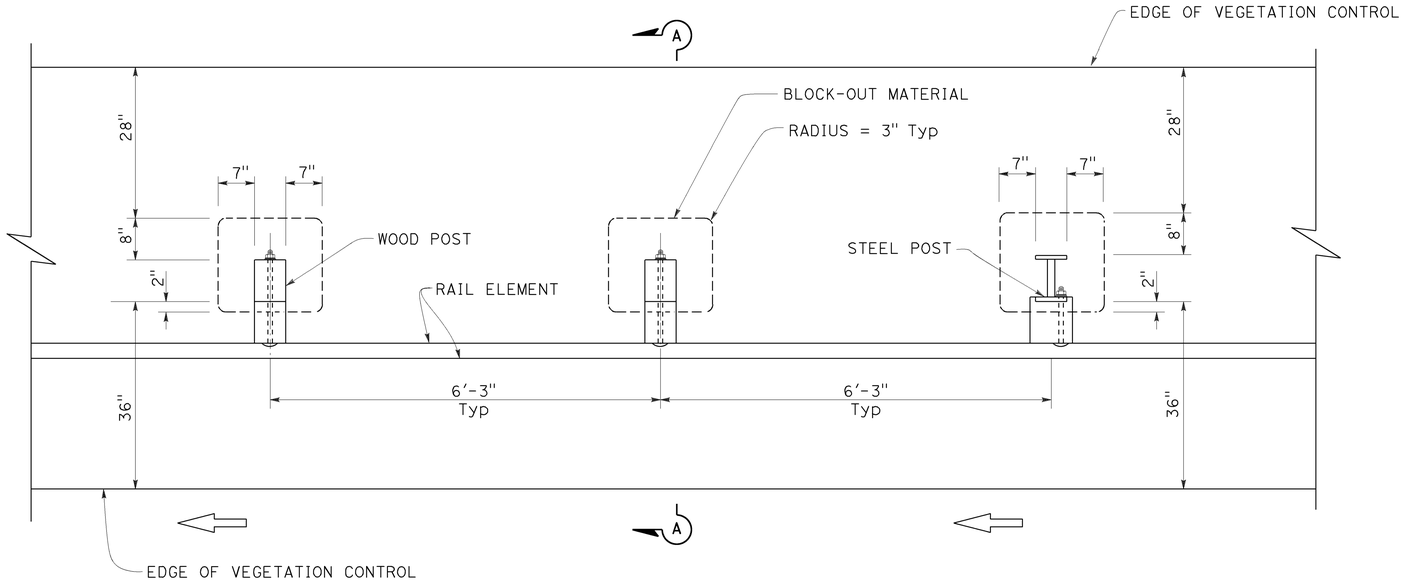

PLAN

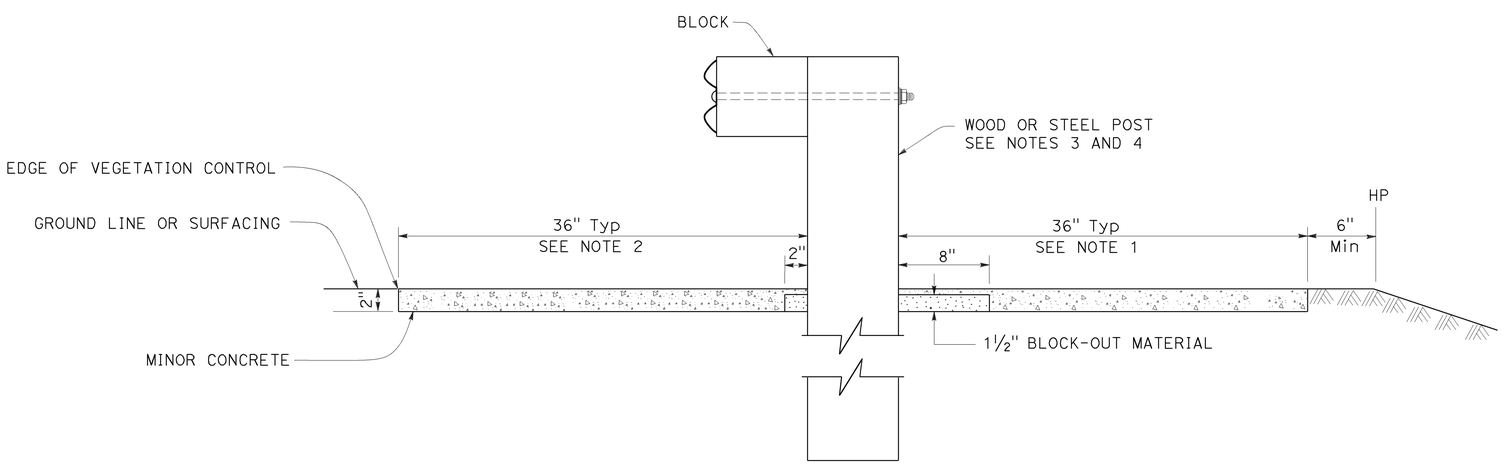

SECTION A-A

NOTES:

1. Where the distance between back of post and hinge point is less than 42", construct vegetation control to 6" from hinge point while maintaining the 8" block-out at back of post. If the 8" block-out at back of post can not be maintained, construct vegetation control flush with the back edge of post.
2. Where dike is constructed under railing, construct vegetation control to back edge of dike. Where paved shoulder is constructed within 36" in front of the post, construct vegetation control to the edge of paved shoulder.
3. For wood post sizes, see Revised Standard Plan RSP A77N1.
4. For steel post sizes, see Revised Standard Plan RSP A77N2.
5. For details not shown, see Revised Standard Plans RSP A77L1 and RSP A77L2.

STATE OF CALIFORNIA
DEPARTMENT OF TRANSPORTATION

MIDWEST GUARDRAIL SYSTEM TYPICAL VEGETATION CONTROL STANDARD RAILING SECTION

NO SCALE

RSP A77N5 DATED JULY 19, 2013 SUPPLEMENTS THE STANDARD PLANS BOOK DATED 2010.

REVISED STANDARD PLAN RSP A77N5

2010 REVISED STANDARD PLAN RSP A77N5

7-3-13

Dist	COUNTY	ROUTE	POST MILES TOTAL PROJECT	SHEET No.	TOTAL SHEETS
07	LA	60	R24.4/R25.3	282	384

Randell D. Hiatt
REGISTERED CIVIL ENGINEER

July 19, 2013
PLANS APPROVAL DATE

REGISTERED PROFESSIONAL ENGINEER
Randell D. Hiatt
No. C50200
Exp. 6-30-15
CIVIL
STATE OF CALIFORNIA

THE STATE OF CALIFORNIA OR ITS OFFICERS OR AGENTS SHALL NOT BE RESPONSIBLE FOR THE ACCURACY OR COMPLETENESS OF SCANNED COPIES OF THIS PLAN SHEET.

TO ACCOMPANY PLANS DATED 3-14-16

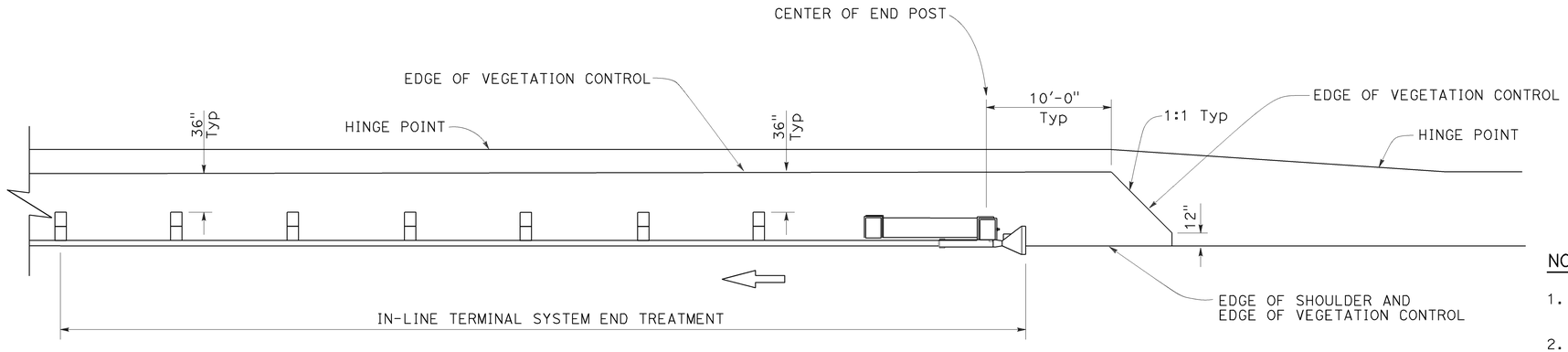

PLAN

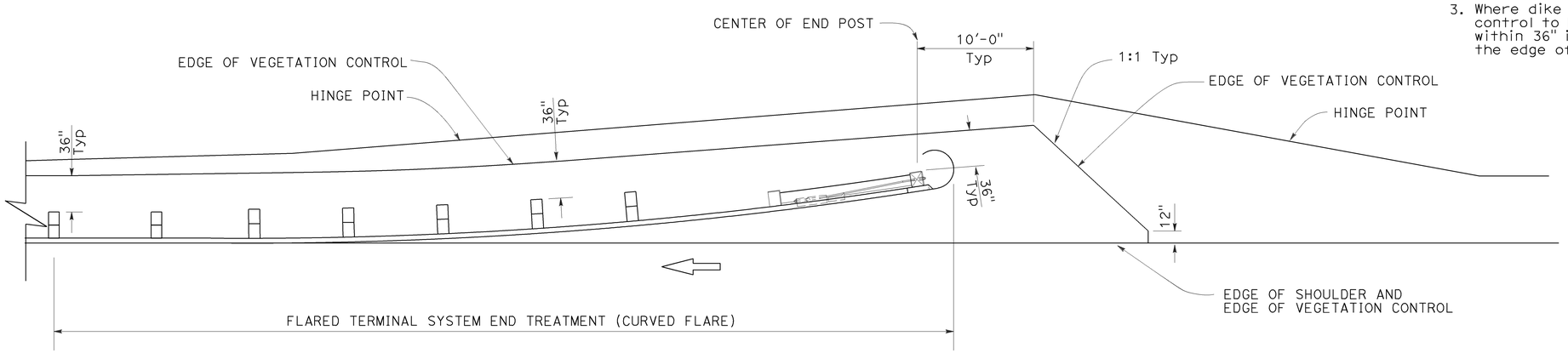

PLAN

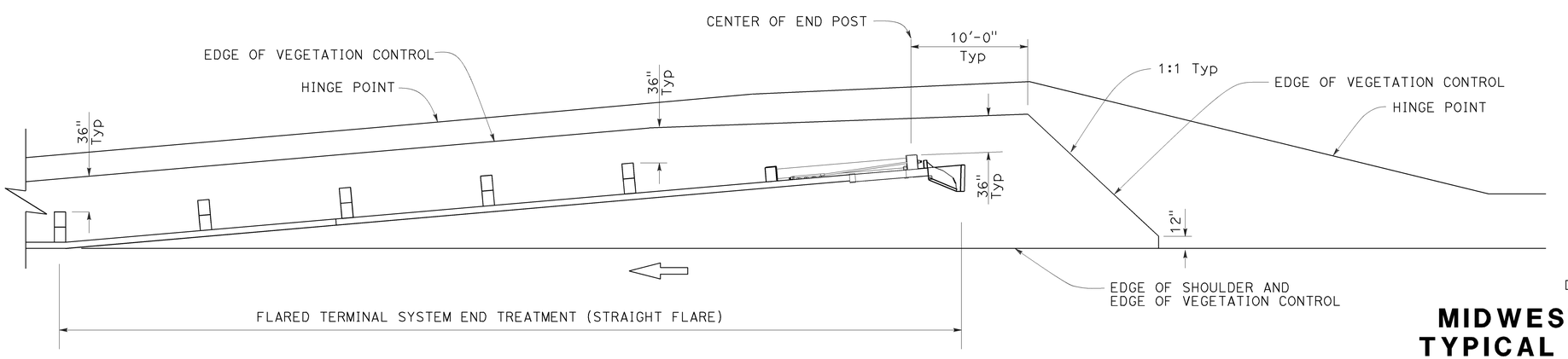

PLAN

NOTES:

1. See Revised Standard Plan RSP A77N5 for additional vegetation control details.
2. Where the distance between back of post and hinge point is less than 42", construct vegetation control to 6" from hinge point while maintaining the 8" block-out at back of post. If the 8" block-out at back of post can not be maintained, construct vegetation control flush with the back edge of post.
3. Where dike is constructed under railing, construct vegetation control to back edge of dike. Where paved shoulder is constructed within 36" in front of the post, construct vegetation control to the edge of paved shoulder.

STATE OF CALIFORNIA
DEPARTMENT OF TRANSPORTATION

MIDWEST GUARDRAIL SYSTEM TYPICAL VEGETATION CONTROL FOR TERMINAL SYSTEM END TREATMENTS

NO SCALE

RSP A77N6 DATED JULY 19, 2013 SUPPLEMENTS THE STANDARD PLANS BOOK DATED 2010.

REVISED STANDARD PLAN RSP A77N6

2010 REVISED STANDARD PLAN RSP A77N6

6-12-13

Dist	COUNTY	ROUTE	POST MILES TOTAL PROJECT	SHEET No.	TOTAL SHEETS
07	LA	60	R24.4/R25.3	283	384

Randell D. Hiatt
REGISTERED CIVIL ENGINEER

July 19, 2013
PLANS APPROVAL DATE

REGISTERED PROFESSIONAL ENGINEER
Randell D. Hiatt
No. C50200
Exp. 6-30-15
CIVIL
STATE OF CALIFORNIA

THE STATE OF CALIFORNIA OR ITS OFFICERS OR AGENTS SHALL NOT BE RESPONSIBLE FOR THE ACCURACY OR COMPLETENESS OF SCANNED COPIES OF THIS PLAN SHEET.

TO ACCOMPANY PLANS DATED 3-14-16

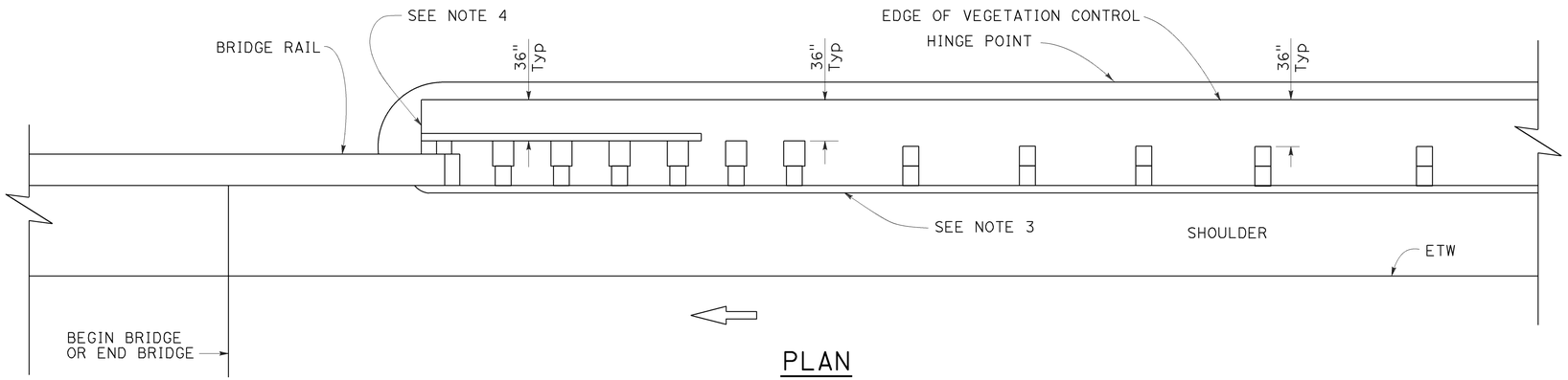

PLAN

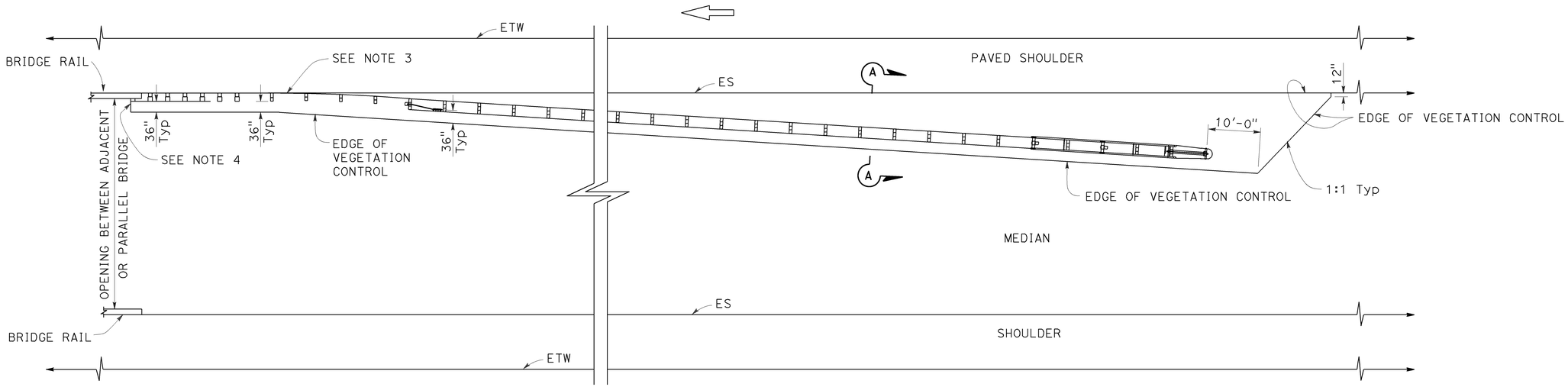

PLAN

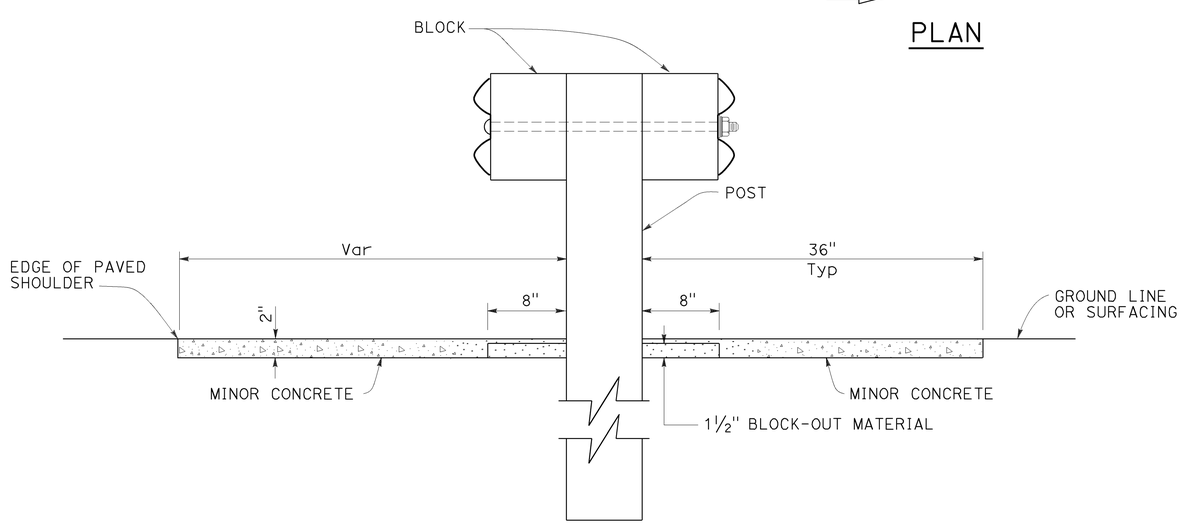

SECTION A-A

NOTES:

1. See Revised Standard Plan RSP A77N5 for additional vegetation control details.
2. Where the distance between back of post and hinge point is less than 42", construct vegetation control to 6" from hinge point while maintaining the 8" block-out at back of post. If the 8" block-out at back of post can not be maintained, construct vegetation control flush with the back edge of post.
3. Where dike is constructed under railing, construct vegetation control to back edge of dike. Where paved shoulder is constructed within 36" in front of the post, construct vegetation control to the edge of paved shoulder.
4. End vegetation control at end of backside rail element.

STATE OF CALIFORNIA
DEPARTMENT OF TRANSPORTATION

MIDWEST GUARDRAIL SYSTEM TYPICAL VEGETATION CONTROL AT STRUCTURE APPROACH

NO SCALE

RSP A77N7 DATED JULY 19, 2013 SUPPLEMENTS THE STANDARD PLANS BOOK DATED 2010.

REVISED STANDARD PLAN RSP A77N7

2010 REVISED STANDARD PLAN RSP A77N7

6-12-13

Dist	COUNTY	ROUTE	POST MILES TOTAL PROJECT	SHEET No.	TOTAL SHEETS
07	LA	60	R24.4/R25.3	284	384

Randell D. Hiatt
REGISTERED CIVIL ENGINEER

July 19, 2013
PLANS APPROVAL DATE

REGISTERED PROFESSIONAL ENGINEER
Randell D. Hiatt
No. C50200
Exp. 6-30-15
CIVIL
STATE OF CALIFORNIA

THE STATE OF CALIFORNIA OR ITS OFFICERS OR AGENTS SHALL NOT BE RESPONSIBLE FOR THE ACCURACY OR COMPLETENESS OF SCANNED COPIES OF THIS PLAN SHEET.

TO ACCOMPANY PLANS DATED 3-14-16

NOTES:

1. See Revised Standard Plan RSP A77N5 for additional vegetation control details.
2. Where the distance between back of post and hinge point is less than 42", construct vegetation control to 6" from hinge point while maintaining the 8" block-out at back of post. If the 8" block-out at back of post can not be maintained, construct vegetation control flush with the back edge of post.
3. Where dike is constructed under railing, construct vegetation control to back edge of dike. Where paved shoulder is constructed within 36" in front of the post, construct vegetation control to the edge of paved shoulder.

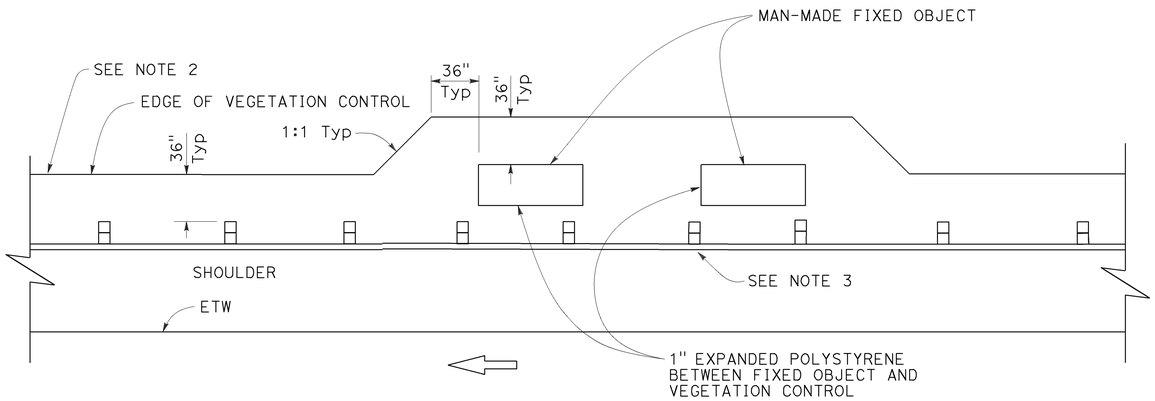

PLAN

Fixed object(s) on shoulder

STATE OF CALIFORNIA
DEPARTMENT OF TRANSPORTATION

MIDWEST GUARDRAIL SYSTEM TYPICAL VEGETATION CONTROL AT FIXED OBJECT

NO SCALE

RSP A77N8 DATED JULY 19, 2013 SUPPLEMENTS THE STANDARD PLANS BOOK DATED 2010.

REVISED STANDARD PLAN RSP A77N8

2010 REVISED STANDARD PLAN RSP A77N8

6-12-13

Dist	COUNTY	ROUTE	POST MILES TOTAL PROJECT	SHEET No.	TOTAL SHEETS
07	LA	60	R24.4/R25.3	285	384

Randell D. Hiatt
REGISTERED CIVIL ENGINEER

November 15, 2013
PLANS APPROVAL DATE

REGISTERED PROFESSIONAL ENGINEER
Randell D. Hiatt
No. C50200
Exp. 6-30-15
CIVIL
STATE OF CALIFORNIA

THE STATE OF CALIFORNIA OR ITS OFFICERS OR AGENTS SHALL NOT BE RESPONSIBLE FOR THE ACCURACY OR COMPLETENESS OF SCANNED COPIES OF THIS PLAN SHEET.

TO ACCOMPANY PLANS DATED 3-14-16

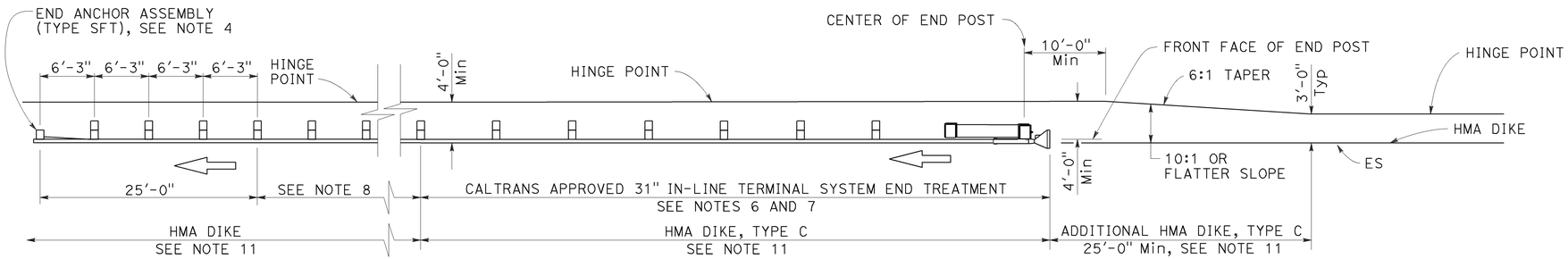

TYPE 11A LAYOUT

(Embankment MGS installation with 31" in-line end treatment at traffic approach end of railing) see Note 5

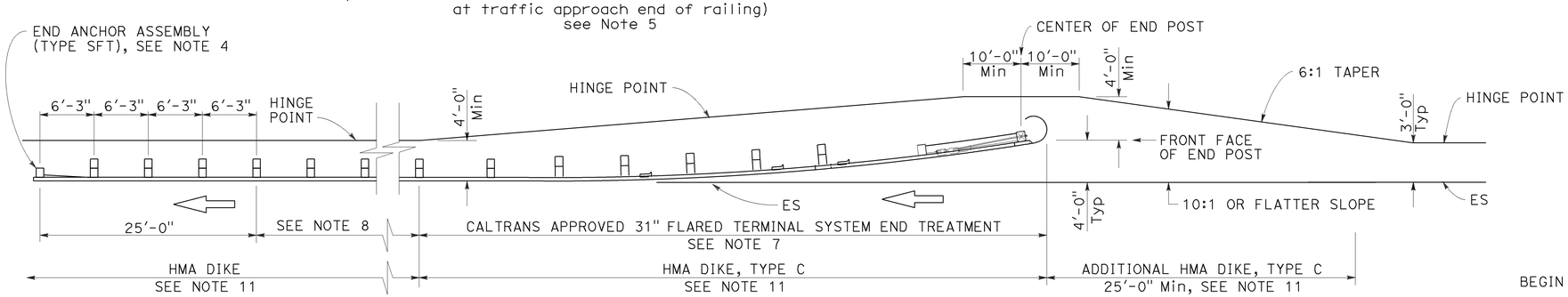

TYPE 11B LAYOUT

(Embankment MGS installation with 31" flared end treatment at traffic approach end of railing) see Note 5

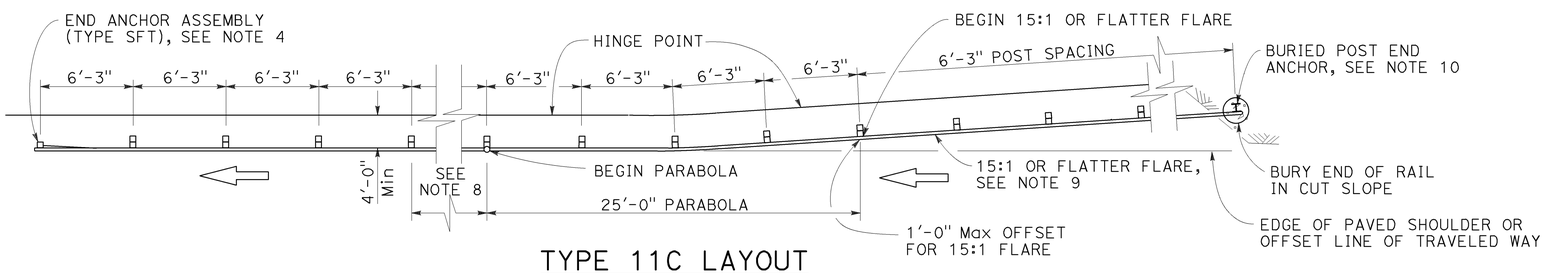

TYPE 11C LAYOUT

(Embankment MGS installation with buried end anchor treatment at traffic approach end of railing) see Notes 5 and 11

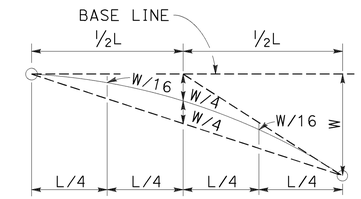

TYPICAL PARABOLIC LAYOUT

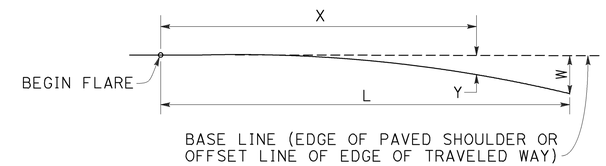

$$Y = \frac{WX^2}{L^2}$$

Y = OFFSET FROM BASE LINE
W = MAXIMUM OFFSET
X = DISTANCE ALONG BASE LINE
L = LENGTH OF FLARE

PARABOLIC FLARE OFFSETS

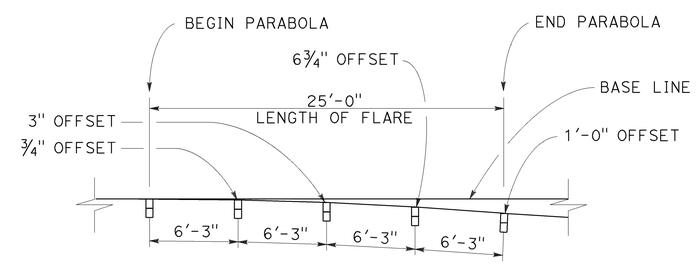

TYPICAL FLARE OFFSETS FOR 1 FOOT Max END OFFSET

NOTES:

1. Line post, blocks and hardware to be used are shown on Revised Standard Plans RSP A77L1, RSP A77L2, RSP A77M1, RSP A77N1 and RSP A77N2.
2. MGS post spacing to be 6'-3" center to center, except as otherwise noted.
3. Except as noted, line posts are 6" x 8" x 6'-0" wood with 6" x 12" x 1'-2" wood blocks. W6 x 8.5 or W6 x 9 steel posts, 6'-0" in length, with 6" x 12" x 1'-2" notched wood blocks or recycled plastic blocks may be used for 6" x 8" x 6'-0" wood post with 6" x 12" x 1'-2" wood blocks where applicable and when specified.
4. For End Anchor Assembly (Type SFT) details, see Revised Standard Plan RSP A77S1.
5. Layout Types 11A, 11B or 11C are typically used where MGS is recommended to shield embankment slopes and a crashworthy end treatment is required for only one direction of traffic.
6. 31" in-line terminal system end treatments are used where site conditions will not accommodate a flared end treatment.
7. The type of 31" terminal system end treatment to be used will be shown on the Project Plans.
8. Dependent on site conditions (embankment height and side slope), construction of additional MGS (length equal to multiples of 12'-6" with 6'-3" post spacing) may be advisable.
9. The 15:1 or flatter flare used with buried end anchors is based on the edge of the paved shoulder or offset line of edge of the traveled way. The length of MGS within the 15:1 or flatter flare is based on site conditions and should be a length equal to multiples of 12'-6".
10. For details of the buried post end anchor used with Type 11C Layout, see Revised Standard Plan RSP A77T2.
11. Where placement of dike is required with MGS installations, see Revised Standard Plan RSP A77N4 for dike positioning details.

STATE OF CALIFORNIA
DEPARTMENT OF TRANSPORTATION

MIDWEST GUARDRAIL SYSTEM TYPICAL LAYOUTS FOR EMBANKMENTS

NO SCALE

RSP A77P1 DATED NOVEMBER 15, 2013 SUPERSEDES RSP A77P1 DATED JULY 19, 2013 THAT SUPPLEMENTS THE STANDARD PLANS BOOK DATED 2010.

REVISED STANDARD PLAN RSP A77P1

2010 REVISED STANDARD PLAN RSP A77P1

10-4-13

Dist	COUNTY	ROUTE	POST MILES TOTAL PROJECT	SHEET No.	TOTAL SHEETS
07	LA	60	R24.4/R25.3	286	384

Randell D. Hiatt
REGISTERED CIVIL ENGINEER

August 14, 2015
PLANS APPROVAL DATE

REGISTERED PROFESSIONAL ENGINEER
Randell D. Hiatt
No. C50200
Exp. 6-30-17
CIVIL
STATE OF CALIFORNIA

THE STATE OF CALIFORNIA OR ITS OFFICERS OR AGENTS SHALL NOT BE RESPONSIBLE FOR THE ACCURACY OR COMPLETENESS OF SCANNED COPIES OF THIS PLAN SHEET.

TO ACCOMPANY PLANS DATED 3-14-16

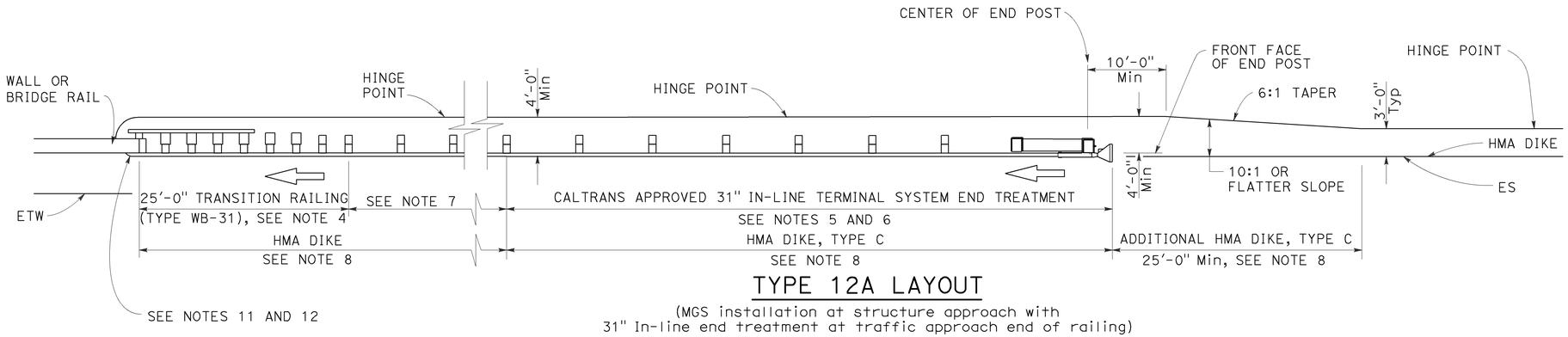

TYPE 12A LAYOUT

(MGS installation at structure approach with
31" In-line end treatment at traffic approach end of railing)
See Note 9

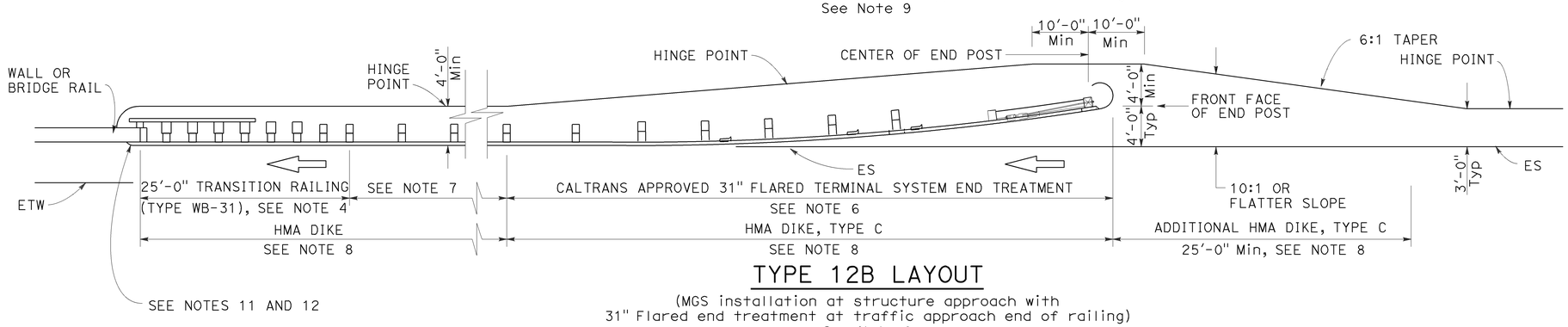

TYPE 12B LAYOUT

(MGS installation at structure approach with
31" Flared end treatment at traffic approach end of railing)
See Note 9

NOTES:

1. Line post, blocks and hardware to be used are shown on Revised Standard Plans RSP A77L1, RSP A77L2, RSP A77M1, RSP A77N1 and RSP A77N2.
2. MGS post spacing to be 6'-3" center to center, except as otherwise noted.
3. Except as noted, line posts are 6" x 8" x 6'-0" wood with 6" x 12" x 1'-2" wood blocks. W6 x 8.5 or W6 x 9 steel posts, 6'-0" in length, with 6" x 12" x 1'-2" notched wood blocks or plastic blocks may be used for 6" x 8" x 6'-0" wood posts with 6" x 12" x 1'-2" wood blocks where applicable and when specified.
4. For Transition Railing (Type WB-31) details for Types 12A and 12B Layouts, see Revised Standard Plan RSP A77U4.
5. 31" in-line terminal system end treatments are used where site conditions will not accommodate a 31" flared end treatment.
6. The type of 31" terminal system end treatment to be used will be shown on the Project Plans.
7. Dependent on site conditions (embankment height, side slopes, or other fixed objects), it may be advisable to construct additional guard railing (a length equal to multiples of 12'-6" with 6'-3" post spacing) between the transition railing and end treatment. A 12.5 degree angle of departure can be drawn on the Project Plans from the edge of traveled way through the outer most point of the fixed object to determine the additional length of railing needed.
8. Where placement of dike is required with guard railing installations, see Revised Standard Plan RSP A77N4 for dike positioning details.
9. Type 12A or Type 12B Layouts are typically used:
   a. To the right of approaching traffic, at the end of a structure, on two-lane conventional highway where the roadbed width across the structure is less than 40 feet.
   b. To the left of approaching traffic, at the end of a structure, on two-lane conventional highway where the roadbed width across the structure is less than 40 feet.
   c. To the right of approaching traffic at the end of each structure on multilane freeways or expressways with separate adjacent or parallel bridges.
   d. To the right of approaching traffic at the end of the structure on multilane freeways or expressways with decked median on the bridge.
10. See Revised Standard Plan RSP A77Q3 for typical layout used left of approaching traffic at the ends of each structure on multilane freeways or expressways with separate adjacent or parallel bridges.
11. For additional details of typical connections to bridge rail, see Connection Detail AA on Revised Standard Plans RSP A77U1 and RSP A77U2 and Connection Detail FF on Revised Standard Plans RSP A77V1 and RSP A77V2.
12. For additional details of a typical connection to walls or abutments, see Revised Standard Plan RSP A77U3.

STATE OF CALIFORNIA
DEPARTMENT OF TRANSPORTATION

MIDWEST GUARDRAIL SYSTEM TYPICAL LAYOUTS FOR STRUCTURE APPROACH

NO SCALE

RSP A77Q1 DATED AUGUST 14, 2015 SUPERSEDES RSP A77Q1 DATED JULY 19, 2013 THAT SUPPLEMENTS THE STANDARD PLANS BOOK DATED 2010.

REVISED STANDARD PLAN RSP A77Q1

2010 REVISED STANDARD PLAN RSP A77Q1

8-12-15

Dist	COUNTY	ROUTE	POST MILES TOTAL PROJECT	SHEET No.	TOTAL SHEETS
07	LA	60	R24.4/R25.3	287	384

Randell D. Hiatt
REGISTERED CIVIL ENGINEER

July 19, 2013
PLANS APPROVAL DATE

REGISTERED PROFESSIONAL ENGINEER Randell D. Hiatt No. C50200 Exp. 6-30-15 CIVIL STATE OF CALIFORNIA

THE STATE OF CALIFORNIA OR ITS OFFICERS OR AGENTS SHALL NOT BE RESPONSIBLE FOR THE ACCURACY OR COMPLETENESS OF SCANNED COPIES OF THIS PLAN SHEET.

TO ACCOMPANY PLANS DATED 3-14-16

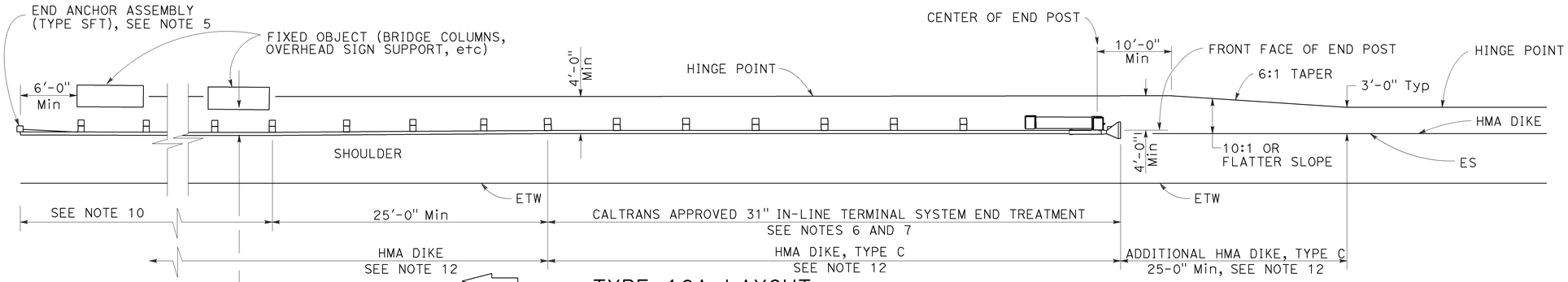

TYPE 16A LAYOUT

(MGS installation at roadside fixed object or objects with 31" in-line end treatment at traffic approach end of railing)
See Notes 11 and 12

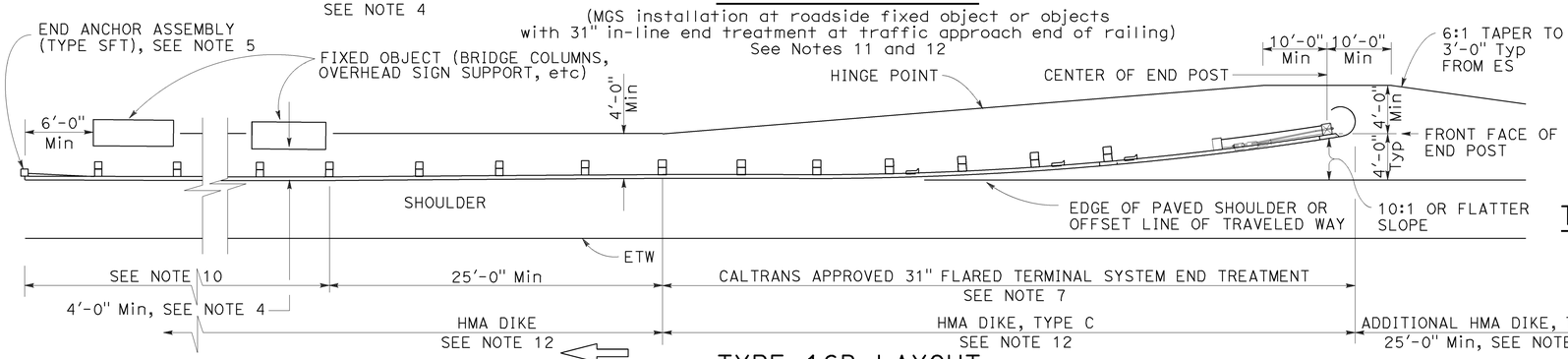

TYPE 16B LAYOUT

(MGS installation at roadside fixed object or objects with 31' flared end treatment at traffic approach end of railing)
See Notes 11 and 12

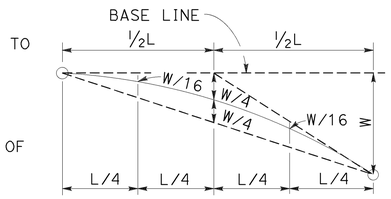

TYPIC AL PARABOLIC LAYOUT

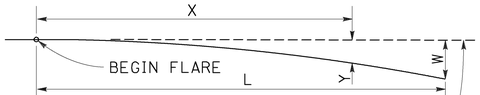

BASE LINE (EDGE OF PAVED SHOULDER OR OFFSET LINE OF EDGE OF TRAVELED WAY)

$$Y = \frac{WX^2}{L^2}$$

Y = OFFSET FROM BASE LINE
W = MAXIMUM OFFSET
X = DISTANCE ALONG BASE LINE
L = LENGTH OF FLARE

PARABOLIC FLARE OFFSETS

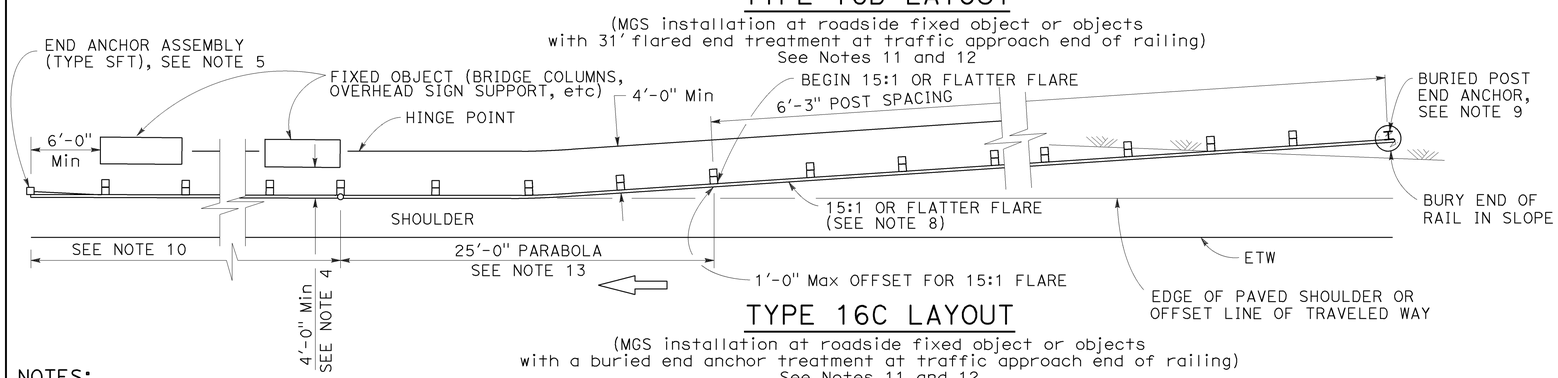

TYPE 16C LAYOUT

(MGS installation at roadside fixed object or objects with a buried end anchor treatment at traffic approach end of railing)
See Notes 11 and 12

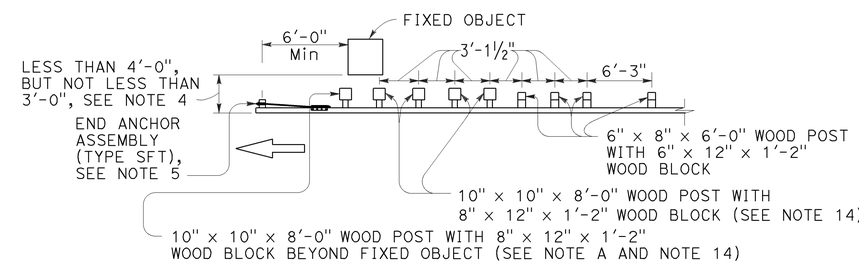

NOTE A: For a series of fixed objects (bridge columns, overhead sign supports, etc.) additional 10" x 10" x 8'-0" wood post with 8" x 12" x 1'-2" wood blocks at 3'-1½" center to center spacing are to be used between fixed objects.

STRENGTHENED MIDWEST GUARDRAIL SYSTEM SECTIONS FOR FIXED OBJECT

Use strengthened MGS sections with Types 16A, 16B or 16C layouts where minimum clearance between the face of the railing and fixed object(s) is less than 4'-0", but not less than 3'-0". See Note 4

NOTES:

1. Line post, blocks and hardware to be used are shown on Revised Standard Plans RSP A77L1, RSP A77L2, RSP A77M1, RSP A77N1 and RSP A77N2.
2. MGS post spacing to be 6'-3" center to center, except as otherwise noted.
3. Except as noted, line posts are 6" x 8" x 6'-0" wood with 6" x 12" x 1'-2" wood blocks. W6 x 8.5 or W6 x 9 steel posts, 6'-0" in length, with 6" x 12" x 1'-2" notched wood blocks or notched recycled plastic blocks may be used for 6" x 8" x 6'-0" wood line posts with 6" x 12" x 1'-2" wood blocks where applicable and when specified.
4. A 4'-0" minimum clearance is required between the face of the railing and the face of a fixed object located directly behind MGS sections with post spacing of 6'-3". Construct MGS as shown in the detail "Strengthened Midwest Guardrail System Sections for Fixed Object" on this plan, where the clearance between the face of the railing and the face of a fixed object is less than 4'-0", but not less than 3'-0". Where the clearance is less than 3'-0", a concrete wall or barrier should be constructed to shield the fixed object(s).
5. For End Anchor Assembly (Type SFT) details, see Revised Standard Plan RSP A77S1.
6. 31" in-line terminal system end treatments are used where site conditions will not accommodate a 31" flared end treatment.
7. The type of 31" terminal system to be used will be shown on the Project Plans.
8. The 15:1 or flatter flare used with Type 16C Layout is based on the edge of the paved shoulder or offset line of edge of the traveled way. The length of MGS within the 15:1 or flatter flare is based on site conditions and should be a length equal to multiples of 12'-6".
9. For details of the Buried Post End Anchor used with Type 16C Layout, see Revised Standard Plan RSP A77T2.
10. As site conditions dictate, construct additional MGS to shield fixed object(s). Additional MGS length equal to multiples of 12'-6". Post spacing at 6'-3" except as specified in Note 4.
11. Layout Types 16A, 16B or 16C are typically used where MGS is recommended to shield roadside fixed object(s) and a crashworthy 31" end treatment is required for only one direction of traffic.
12. Where placement of dike is required with MGS, see Revised Standard Plan RSP A77N4 for dike positioning details.
13. For typical flare offsets for 25'-0" length parabola with maximum offset of 1'-0", see Revised Standard Plan RSP A77P1.
14. W6 x 15 steel post, 8'-0" in length, with 8" x 12" x 1'-2" notched wood block or notched recycled plastic blocks may be used in place of the 10" x 10" x 8'-0" wood post with 8" x 12" x 1'-2" wood block shown in the detail "Strengthened Midwest Guardrail System Sections for Fixed Object".

STATE OF CALIFORNIA
DEPARTMENT OF TRANSPORTATION

MIDWEST GUARDRAIL SYSTEM TYPICAL LAYOUTS FOR ROADSIDE FIXED OBJECTS

NO SCALE

RSP A77R3 DATED JULY 19, 2013 SUPPLEMENTS THE STANDARD PLANS BOOK DATED 2010.

REVISED STANDARD PLAN RSP A77R3

2010 REVISED STANDARD PLAN RSP A77R3

6-20-13

Dist	COUNTY	ROUTE	POST MILES TOTAL PROJECT	SHEET No.	TOTAL SHEETS
07	LA	60	R24.4/R25.3	288	384

Randell D. Hiatt
REGISTERED CIVIL ENGINEER

November 15, 2013
PLANS APPROVAL DATE

REGISTERED PROFESSIONAL ENGINEER
Randell D. Hiatt
No. C50200
Exp. 6-30-15
CIVIL
STATE OF CALIFORNIA

THE STATE OF CALIFORNIA OR ITS OFFICERS OR AGENTS SHALL NOT BE RESPONSIBLE FOR THE ACCURACY OR COMPLETENESS OF SCANNED COPIES OF THIS PLAN SHEET.

TO ACCOMPANY PLANS DATED 3-14-16

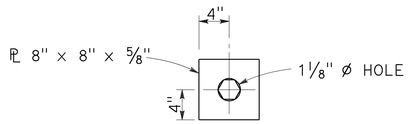

DETAIL "A"
CABLE CONNECTION
END PLATE

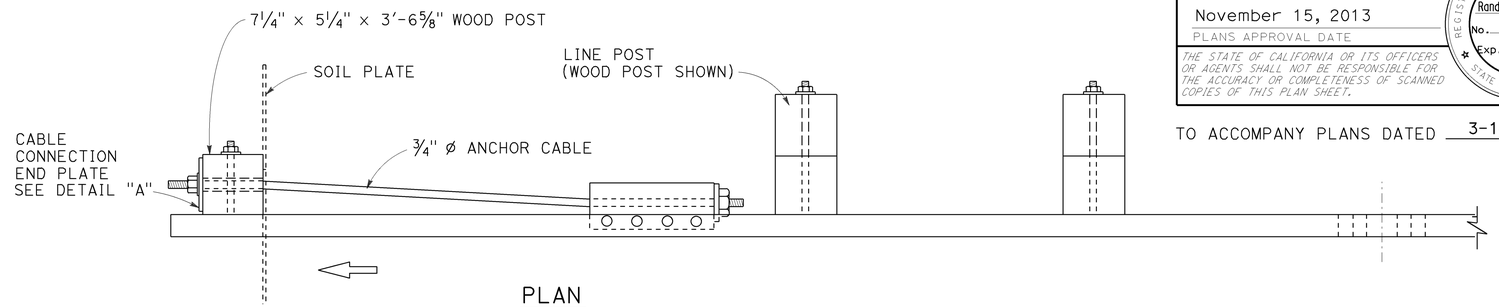

PLAN

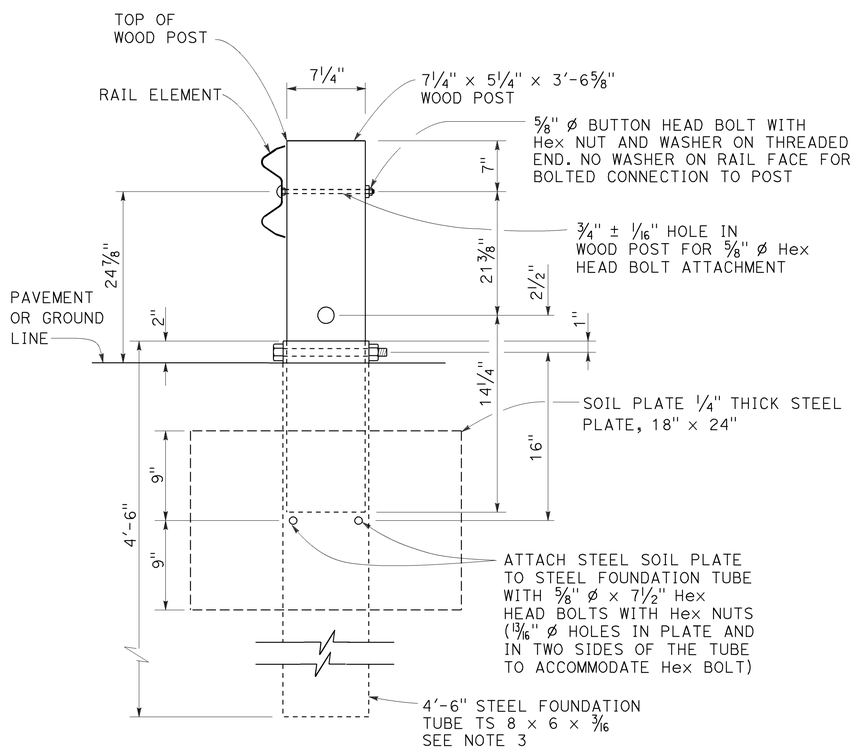

SECTION A-A

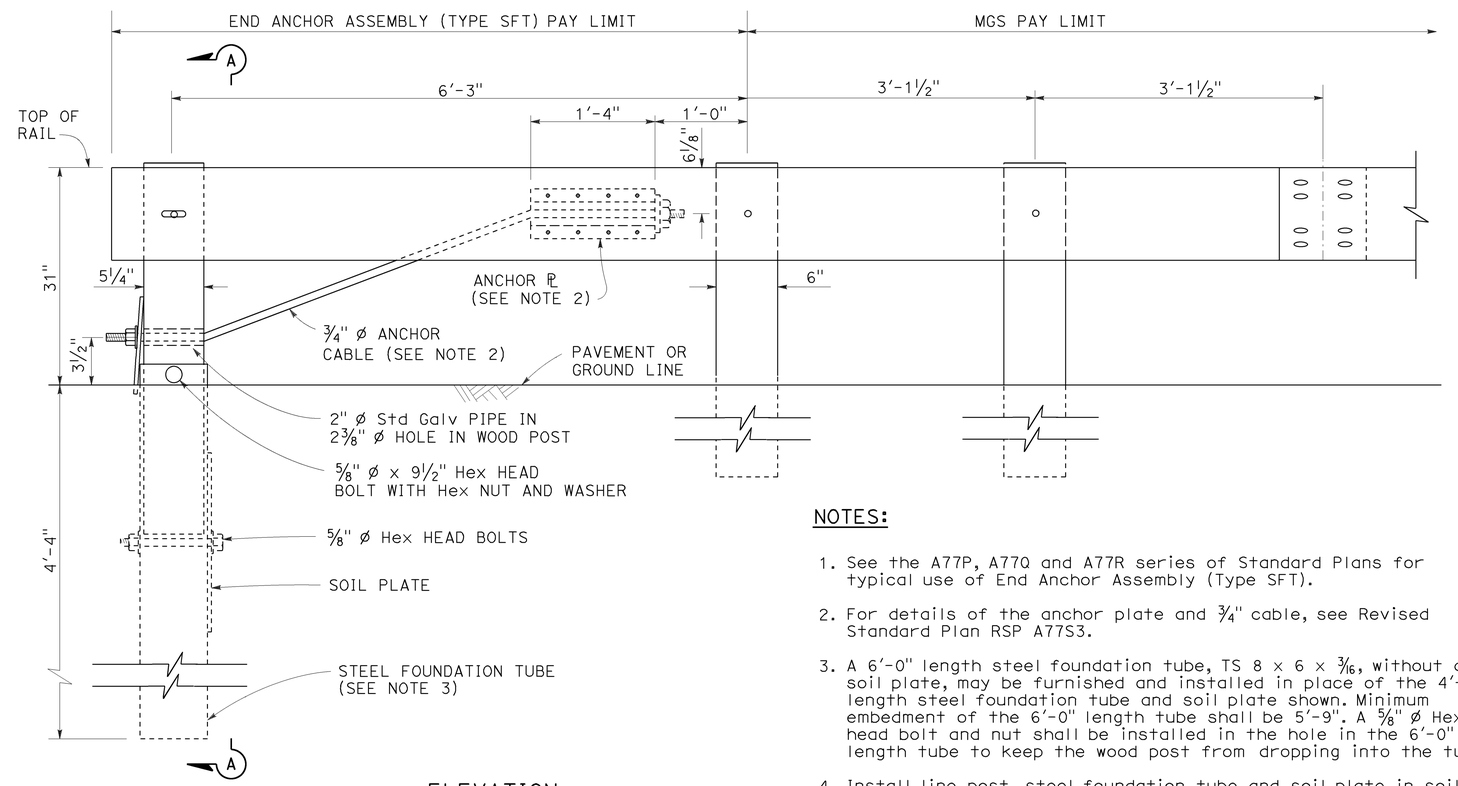

ELEVATION

END ANCHOR
ASSEMBLY (TYPE SFT)
See Note 1

NOTES:

1. See the A77P, A77Q and A77R series of Standard Plans for typical use of End Anchor Assembly (Type SFT).
2. For details of the anchor plate and 3/4" cable, see Revised Standard Plan RSP A77S3.
3. A 6'-0" length steel foundation tube, TS 8 × 6 × 3/16, without a soil plate, may be furnished and installed in place of the 4'-6" length steel foundation tube and soil plate shown. Minimum embedment of the 6'-0" length tube shall be 5'-9". A 5/8" ø Hex head bolt and nut shall be installed in the hole in the 6'-0" length tube to keep the wood post from dropping into the tube.
4. Install line post, steel foundation tube and soil plate in soil.

STATE OF CALIFORNIA
DEPARTMENT OF TRANSPORTATION

MIDWEST GUARDRAIL SYSTEM END ANCHOR ASSEMBLY (TYPE SFT)

NO SCALE

RSP A77S1 DATED NOVEMBER 15, 2013 SUPERSEDES RSP A77S1 DATED JULY 19, 2013 THAT SUPPLEMENTS THE STANDARD PLANS BOOK DATED 2010.

REVISED STANDARD PLAN RSP A77S1

2010 REVISED STANDARD PLAN RSP A77S1

10-4-13

Dist	COUNTY	ROUTE	POST MILES TOTAL PROJECT	SHEET No.	TOTAL SHEETS
07	LA	60	R24.4/R25.3	289	384

Randell D. Hiatt
REGISTERED CIVIL ENGINEER

November 15, 2013
PLANS APPROVAL DATE

REGISTERED PROFESSIONAL ENGINEER
Randell D. Hiatt
No. C50200
Exp. 6-30-15
CIVIL
STATE OF CALIFORNIA

THE STATE OF CALIFORNIA OR ITS OFFICERS OR AGENTS SHALL NOT BE RESPONSIBLE FOR THE ACCURACY OR COMPLETENESS OF SCANNED COPIES OF THIS PLAN SHEET.

TO ACCOMPANY PLANS DATED 3-14-16

2010 REVISED STANDARD PLAN RSP A77S3

NOTE:

See Revised Standard Plans RSP A77S1, RSP A77S2 and RSP A77T1 for typical use of anchor cable and anchor plate.

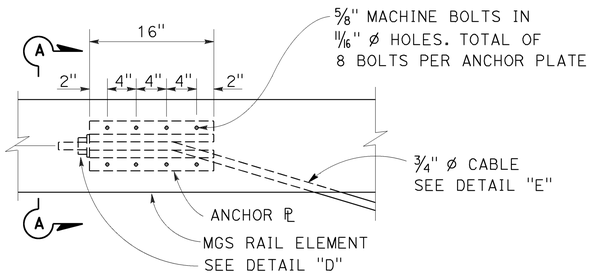

ANCHOR PLATE DETAIL
(MGS shown, TBB similar)

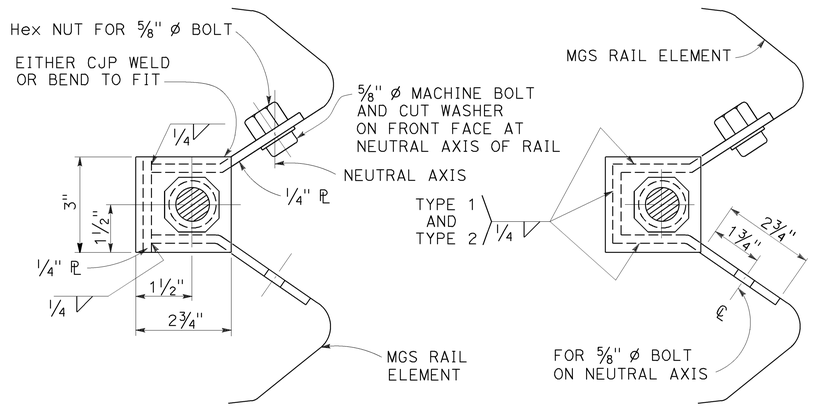

NOTE:
Dimensioning applies to both types.

SECTION A-A
(ALTERNATIVE TYPE 1)

SECTION A-A
(ALTERNATIVE TYPE 2)

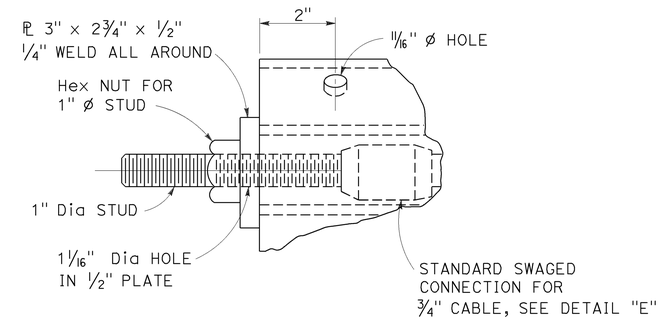

DETAIL "D"

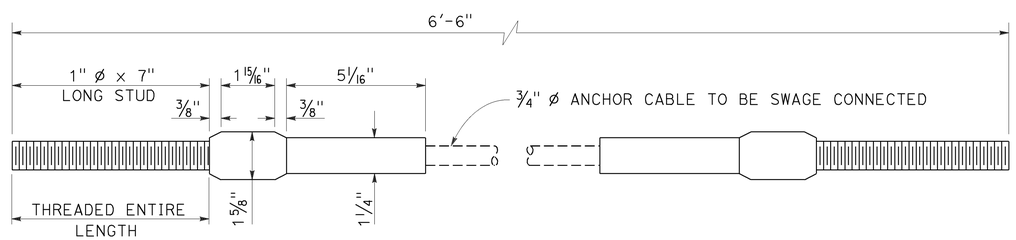

ANCHOR CABLE WITH
SWAGED FITTING AND STUD
DETAIL "E"

STATE OF CALIFORNIA
DEPARTMENT OF TRANSPORTATION

METAL RAILING ANCHOR CABLE AND ANCHOR PLATE DETAILS

NO SCALE

RSP A77S3 DATED NOVEMBER 15, 2013 SUPERSEDES RSP A77S3
DATED JULY 19, 2013 THAT SUPPLEMENTS THE STANDARD PLANS BOOK DATED 2010.

REVISED STANDARD PLAN RSP A77S3

10-4-13

Dist	COUNTY	ROUTE	POST MILES TOTAL PROJECT	SHEET No.	TOTAL SHEETS
07	LA	60	R24.4/R25.3	290	384

Randell D. Hiatt
REGISTERED CIVIL ENGINEER

January 23, 2015
PLANS APPROVAL DATE

REGISTERED PROFESSIONAL ENGINEER
Randell D. Hiatt
No. C50200
Exp. 6-30-15
CIVIL
STATE OF CALIFORNIA

THE STATE OF CALIFORNIA OR ITS OFFICERS OR AGENTS SHALL NOT BE RESPONSIBLE FOR THE ACCURACY OR COMPLETENESS OF SCANNED COPIES OF THIS PLAN SHEET.

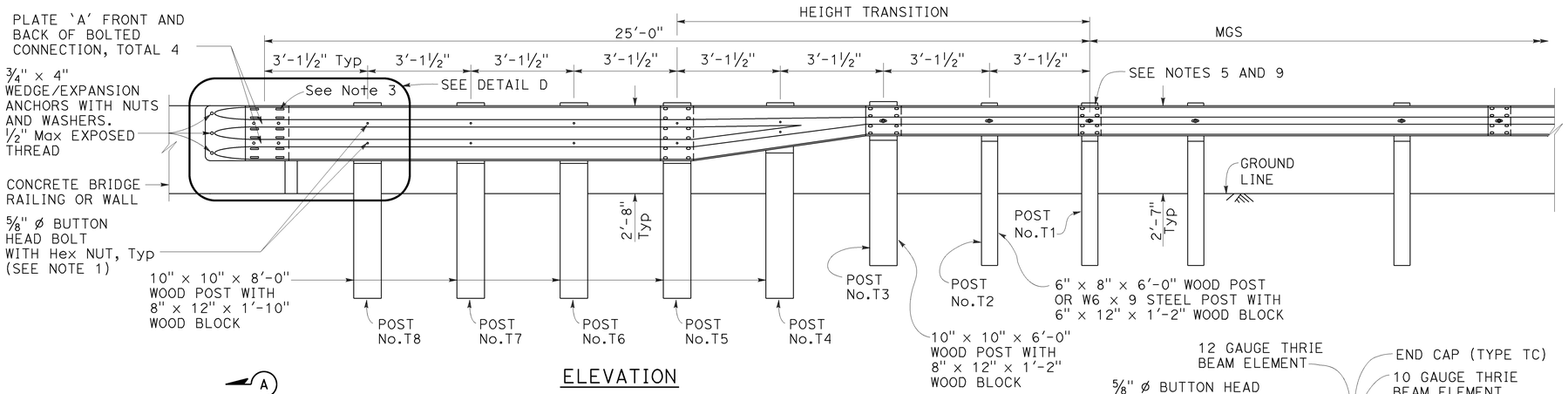

ELEVATION

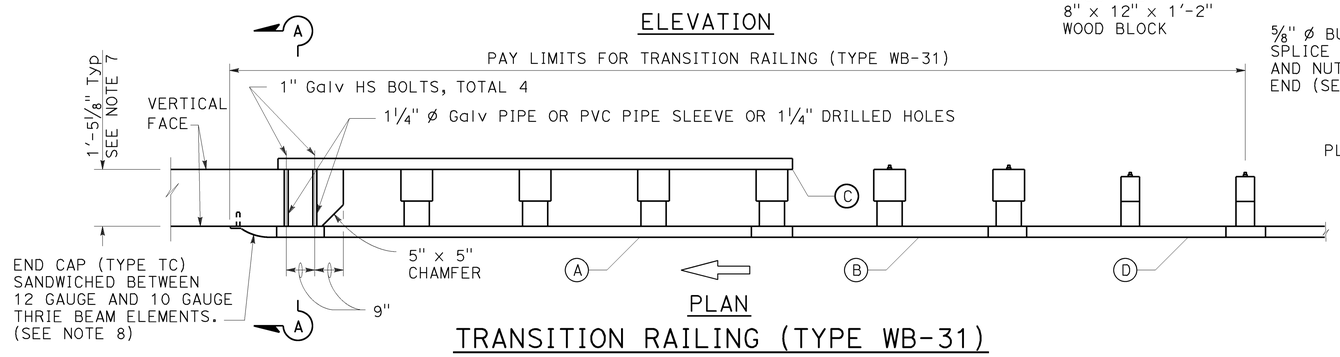

PLAN

TRANSITION RAILING (TYPE WB-31)

(No Blockout Attachment)

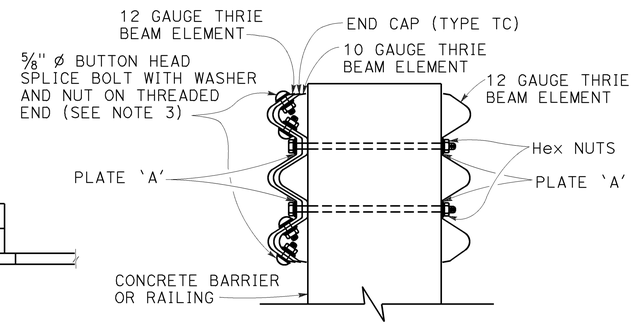

SECTION A-A

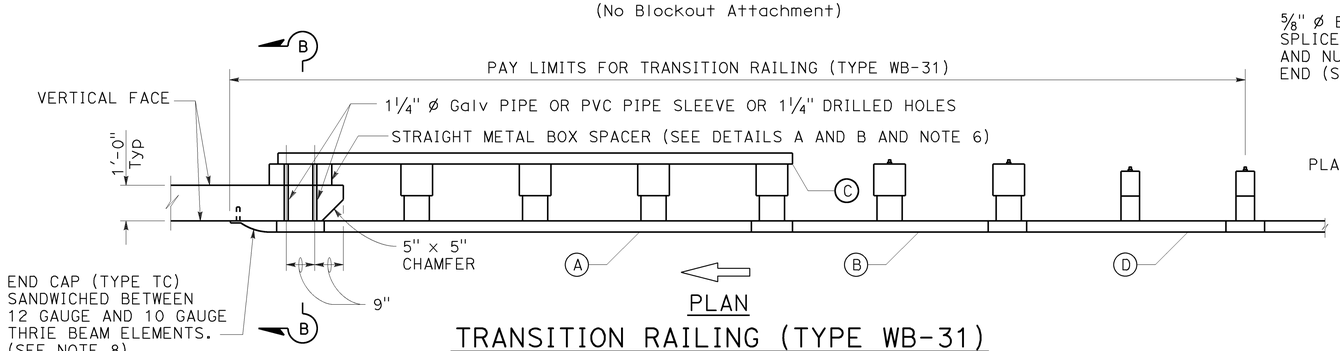

PLAN

TRANSITION RAILING (TYPE WB-31)

(Blockout Attachment)

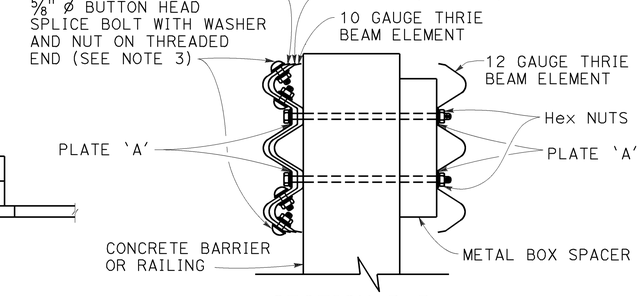

SECTION B-B

LEGEND:

- (A) NESTED THRIE BEAM ELEMENTS (ONE 12 GAUGE ELEMENT NESTED OVER ONE 10 GAUGE ELEMENT).
- (B) ONE ASYMMETRICAL 10 GAUGE "W" BEAM TO THRIE BEAM ELEMENT.
- (C) ONE 12 GAUGE THRIE BEAM ELEMENT.
- (D) ONE 10 GAUGE "W" BEAM RAIL ELEMENT (7'-3 1/2"LENGTH)

10 GAUGE = 0.138" THICK
12 GAUGE = 0.108" THICK

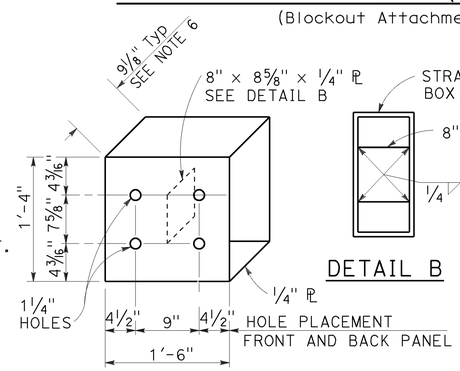

DETAIL A

STRAIGHT METAL BOX SPACER

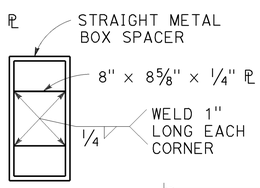

DETAIL B

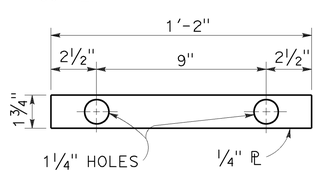

DETAIL C

PLATE 'A'

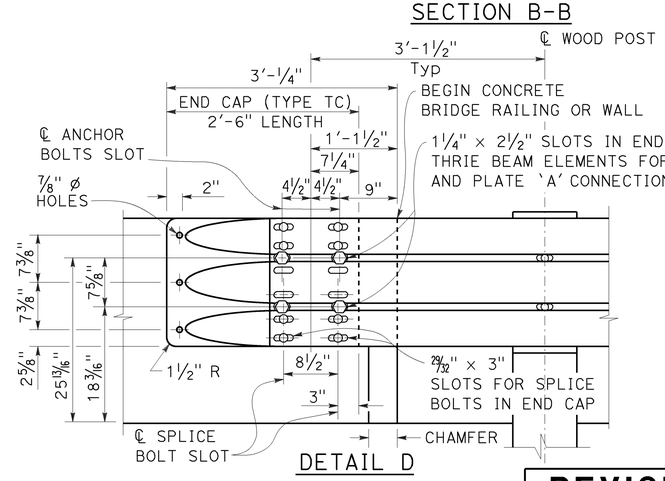

DETAIL D

NOTES:

TO ACCOMPANY PLANS DATED 3-14-16

1. Use 5/8" ø Button head bolts and hex nuts for connections to posts. No washer on rail face for bolted connections to post.
2. The nested rail elements, end cap, and 'W' beam to thrie beam element may be spliced together prior to bolting the elements to the wood post and concrete barrier or railing.
3. Exterior splice bolt holes for rail element splices at Post No. T5 and the connection to the concrete barrier or railing shall be the standard 29/32" x 1 1/8" slot size. Interior splice bolt holes at these locations may be increased up to 1 1/4" ø. Only the top 4 and the bottom 4 splice bolts with washers and nuts are required for rail splices at Post No. T5 and the connection to the concrete barrier or railing.
4. The top elevation of Posts No. T2 through No. T7 shall not project more than 1" above the top elevation of the rail element.
5. Typically, the railing connected to Transition Railing (Type WB-31) will be either standard railing section of MGS with height transition ratio of 150:1 or a Caltrans approved 31" end treatment attached to Post No. T1.
6. The depth of the metal box spacer varies from the 9 1/8" to 1 1/2" and is dependent on the width of the concrete railing or wall. The combined dimension for the depth of the metal box spacer plus the width of railing or wall is typically 21 1/8". Where the space between the backside of the concrete railing or wall and the rear thrie beam element is less than 1 1/2", metal plates similar to Plate 'A' are to be used as spacers.
7. Where the width of the concrete railing or wall is greater than 17 1/8", wood blocks are to be used to fill the space created between the backside of Posts No. T5 through No. T8 and the rear thrie beam element. These wood blocks shall be 8" in width and 1'-2" in length. The dimension between the front thrie beam element and the rear thrie beam element is to match the width of the concrete railing or wall.
8. End cap may be installed over 12 gauge and 10 gauge thrie beam elements where transition railing is installed on the departure end of bridge railing.
9. Conform standard railing section height to 31" at Post No. T1 using height transition ratio of 150:1.

STATE OF CALIFORNIA
DEPARTMENT OF TRANSPORTATION

MIDWEST GUARDRAIL SYSTEM TRANSITION RAILING (TYPE WB-31)

NO SCALE

RSP A77U4 DATED JANUARY 23, 2015 SUPERSEDES RSP A77U4 DATED NOVEMBER 15, 2013 AND RSP A77U4 DATED JULY 19, 2013 THAT SUPPLEMENTS THE STANDARD PLANS BOOK DATED 2010.

REVISED STANDARD PLAN RSP A77U4

2010 REVISED STANDARD PLAN RSP A77U4

1-8-15

Dist	COUNTY	ROUTE	POST MILES TOTAL PROJECT	SHEET No.	TOTAL SHEETS
07	LA	60	R24.4/R25.3	291	384

REGISTERED CIVIL ENGINEER

July 18, 2014
PLANS APPROVAL DATE

Glenn DeCou No. C34547 Exp. 9-30-15 CIVIL — REGISTERED PROFESSIONAL ENGINEER — STATE OF CALIFORNIA

THE STATE OF CALIFORNIA OR ITS OFFICERS OR AGENTS SHALL NOT BE RESPONSIBLE FOR THE ACCURACY OR COMPLETENESS OF SCANNED COPIES OF THIS PLAN SHEET.

TO ACCOMPANY PLANS DATED 3-14-16

2010 REVISED STANDARD PLAN RSP A85

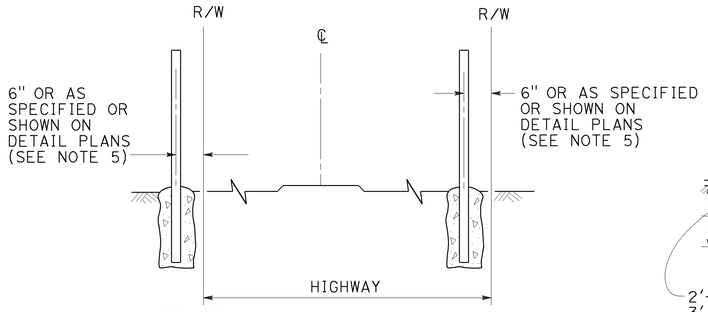

FENCE LOCATION

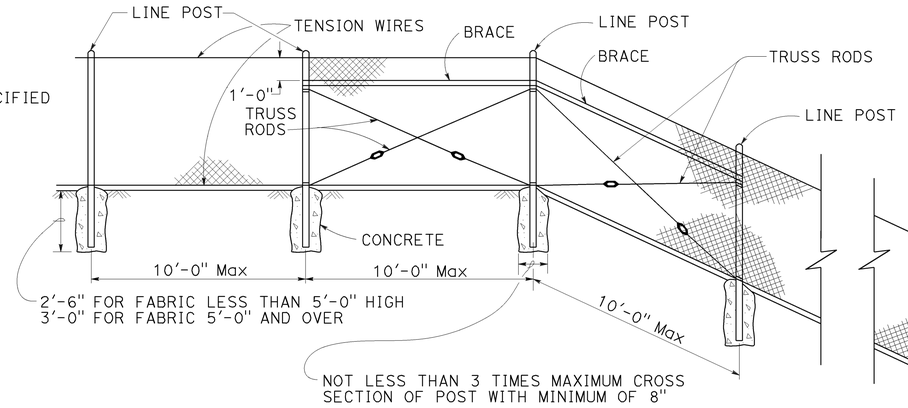

CHAIN LINK FENCE ON SHARP BREAK IN GRADE

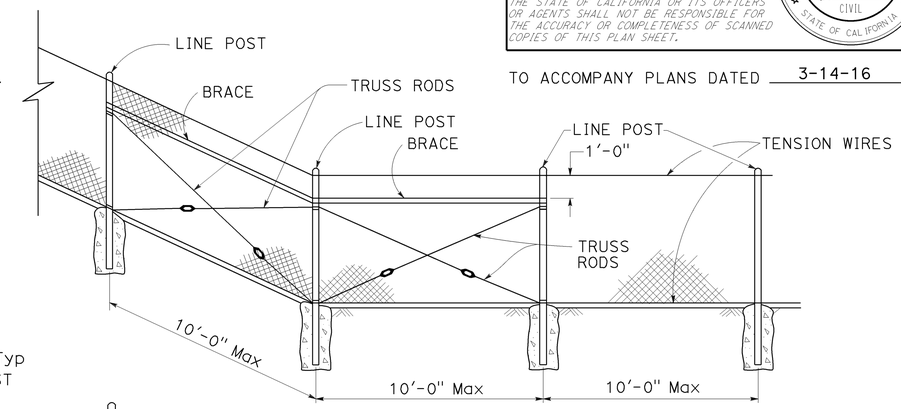

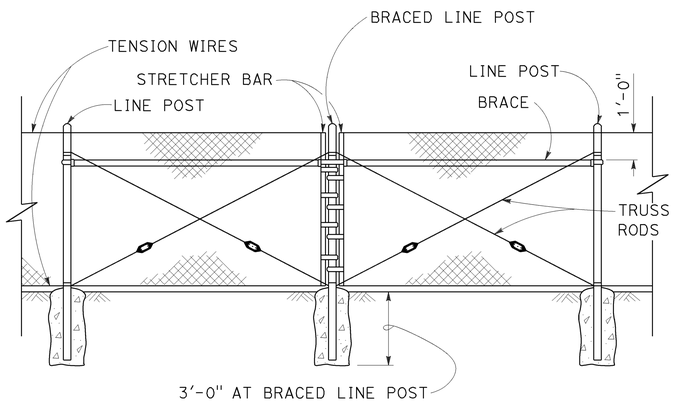

BRACED LINE POST INSTALLATION

Braced line post at intervals not exceeding 1000'

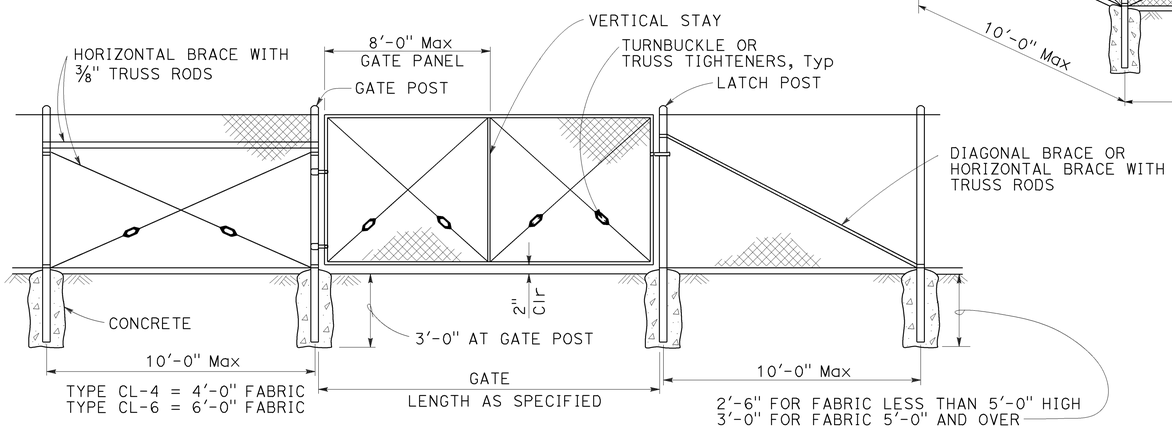

CHAIN LINK GATE INSTALLATION

GATE POST			
FENCE HEIGHT	GATE WIDTHS	ROUND OD PIPE	WEIGHT (lb/ft)
6'-0" AND LESS	UP THRU 6'-0"	2.875"	5.80
	OVER 6'-0" THRU 12'-0"	4.500"	10.80
	OVER 12'-0" THRU 18'-0"	5.563"	14.63
	OVER 18'-0" TO 24'-0" Max	6.625"	18.99
OVER 6'-0" TO 8'-0" Max	UP THRU 6'-0"	3.500"	7.58
	OVER 6'-0" THRU 12'-0"	5.563"	14.63
	OVER 12'-0" THRU 18'-0"	6.625"	18.99
	OVER 18'-0" TO 24'-0" Max	8.625"	28.58

Above post dimensions and weights are minimums. Larger sizes may be used upon approval.

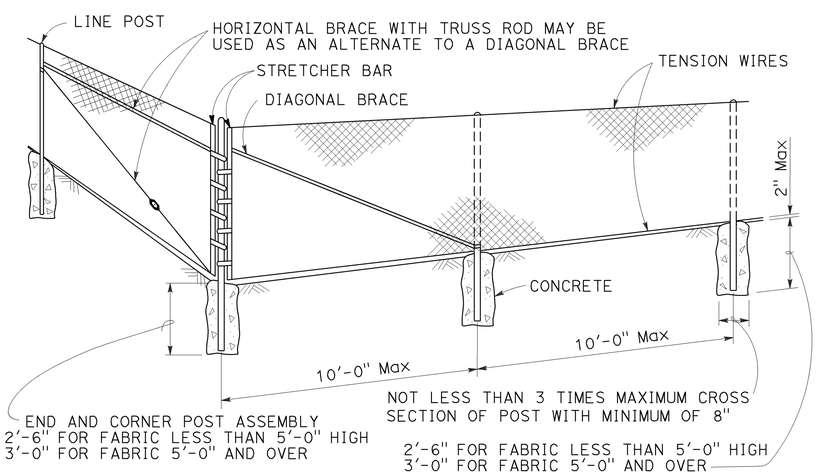

CORNER POST

NOTES:

1. The table below shows minimum sized posts and braces complying with the specifications. Larger or heavier post and brace sizes may be used upon approval.
2. Sections shown in the tables must also comply with the strength requirements and other provisions of the Specifications.
3. Other sections which comply with the strength requirements and other provisions of the Specifications may be used upon approval.
4. Options exercised shall be uniform on any one project.
5. Offset to be 2'-0" at monument locations, measured at right angles to R/W lines. Taper to achieve offset to be at least 20'-0" long.
6. See Revised Standard Plan RSP A85B for Brace, Stretcher Bar, and Truss Tightener Details.

TYPICAL MEMBER DIMENSIONS (See Notes)										
FENCE HEIGHT	LINE POSTS				END, LATCH AND CORNER POSTS		BRACES			
	ROUND OD PIPE	WEIGHT (lb/ft)	ROLL FORMED		ROUND OD PIPE	WEIGHT (lb/ft)	ROUND OD PIPE	WEIGHT (lb/ft)	ROLL FORMED	
			SECTION	WEIGHT (lb/ft)					SECTION	WEIGHT (lb/ft)
6'-0" AND LESS	1.900"	2.72	1.875" x 1.625"	1.85	2.375"	3.65	1.66"	2.27	1.625" x 1.25"	1.35
OVER 6'-0" TO 8'-0" Max	2.375"	3.65	2.25" x 1.70"	2.78	2.875"	5.80	1.66"	2.27	1.625" x 1.25"	1.35

STATE OF CALIFORNIA
DEPARTMENT OF TRANSPORTATION

CHAIN LINK FENCE

NO SCALE

RSP A85 DATED JULY 18, 2014 SUPERSEDES STANDARD PLAN A85 DATED MAY 20, 2011 - PAGE 112 OF THE STANDARD PLANS BOOK DATED 2010.

REVISED STANDARD PLAN RSP A85

7-1-14

Dist	COUNTY	ROUTE	POST MILES TOTAL PROJECT	SHEET No.	TOTAL SHEETS
07	LA	60	R24.4/R25.3	292	384

Glenn DeCou
REGISTERED CIVIL ENGINEER

October 19, 2012
PLANS APPROVAL DATE

REGISTERED PROFESSIONAL ENGINEER
Glenn DeCou
No. C34547
Exp. 9-30-13
CIVIL
STATE OF CALIFORNIA

THE STATE OF CALIFORNIA OR ITS OFFICERS OR AGENTS SHALL NOT BE RESPONSIBLE FOR THE ACCURACY OR COMPLETENESS OF SCANNED COPIES OF THIS PLAN SHEET.

TO ACCOMPANY PLANS DATED 3-14-16

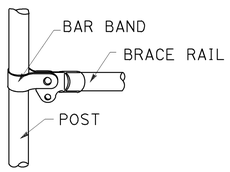

BRACE RAIL

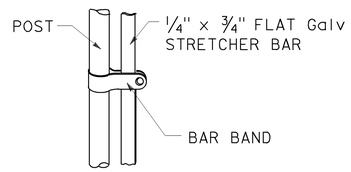

STRETCHER BAR

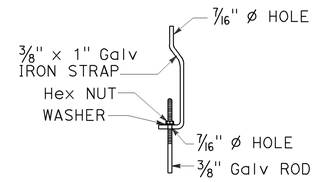

TRUSS TIGHTENER

NOTES:

1. All material for abutment connection to be galvanized.
2. The chain link fabric shall be replaced by barbed wire strands at 12" maximum centers between the double posts.
3. When the width of the culvert makes it necessary to anchor a post to the top of the culvert, a cast iron shoe or other device approved by the Engineer shall be used.
4. Fencing over stream and around headwall may also use Barbed Wire or Wire Mesh fencing with either wood post or steel post installation.
5. See Standard Plan A85 for Chain Link fence dimensions. See Standard Plan A86 for Barbed Wire and Wire Mesh fence dimensions and for wood post and steel post installation.

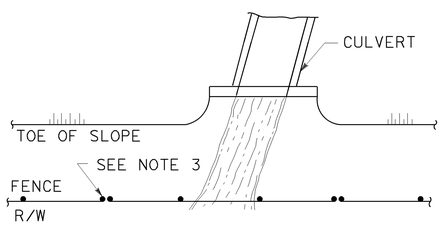

PLAN

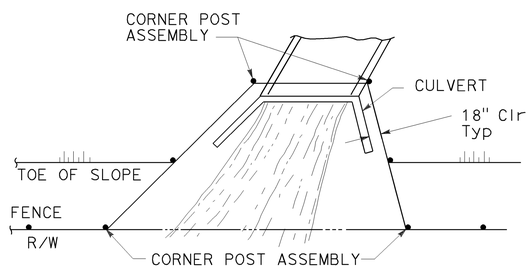

PLAN

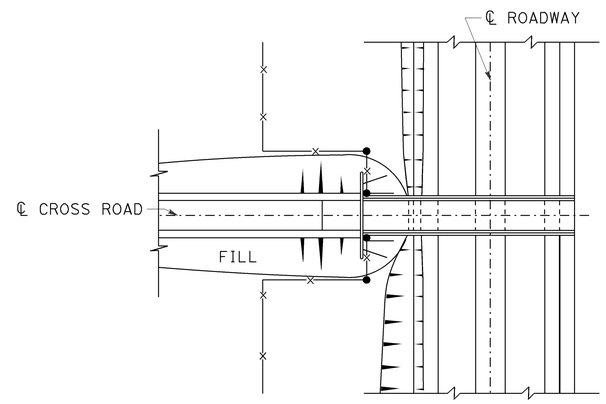

PLAN OF ROADWAY - OVERCROSSING

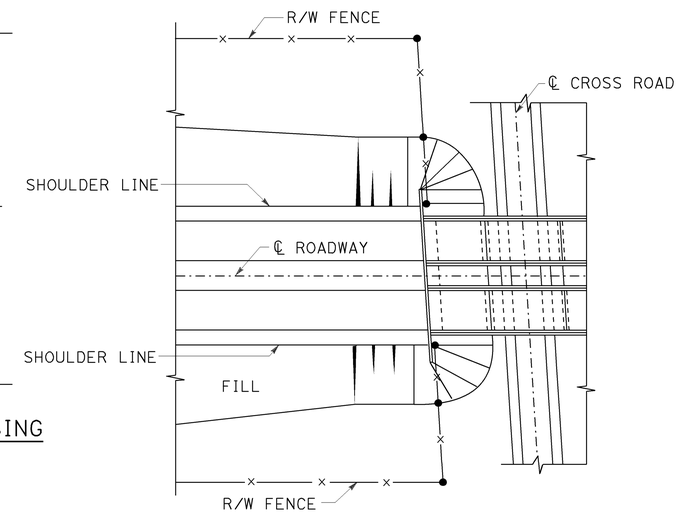

PLAN OF ROADWAY - UNDERCROSSING

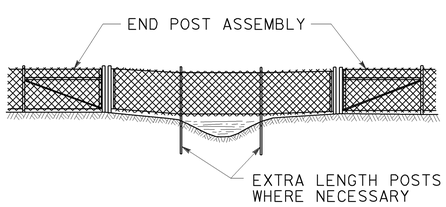

ELEVATION

INSTALLATION OVER STREAM

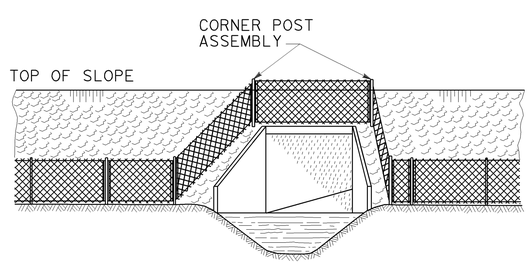

ELEVATION

INSTALLATION AROUND HEADWALL

See Note 4

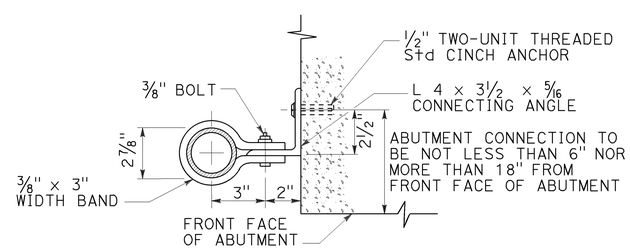

ABUTMENT CONNECTION

TYPICAL INSTALLATION AT BRIDGES

STATE OF CALIFORNIA
DEPARTMENT OF TRANSPORTATION

CHAIN LINK FENCE DETAILS

NO SCALE

RSP A85B DATED OCTOBER 19, 2012 SUPERSEDES STANDARD PLAN A85B DATED MAY 20, 2011 - PAGE 114 OF THE STANDARD PLANS BOOK DATED 2010.

REVISED STANDARD PLAN RSP A85B

2010 REVISED STANDARD PLAN RSP A85B

7-19-12

Dist	COUNTY	ROUTE	POST MILES TOTAL PROJECT	SHEET No.	TOTAL SHEETS
07	LA	60	R24.4/R25.3	293	384

REGISTERED CIVIL ENGINEER

July 19, 2013
PLANS APPROVAL DATE

REGISTERED PROFESSIONAL ENGINEER Michael Janzen No. 44788 Exp. 03-31-14 CIVIL STATE OF CALIFORNIA

THE STATE OF CALIFORNIA OR ITS OFFICERS OR AGENTS SHALL NOT BE RESPONSIBLE FOR THE ACCURACY OR COMPLETENESS OF SCANNED COPIES OF THIS PLAN SHEET.

TO ACCOMPANY PLANS DATED 3-14-16

2010 REVISED STANDARD PLAN RSP A87A

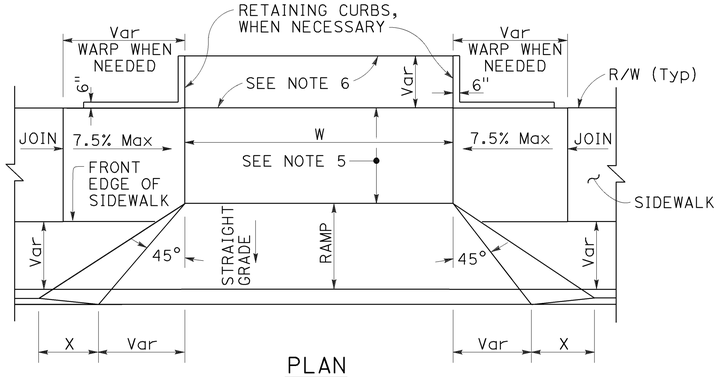

PLAN

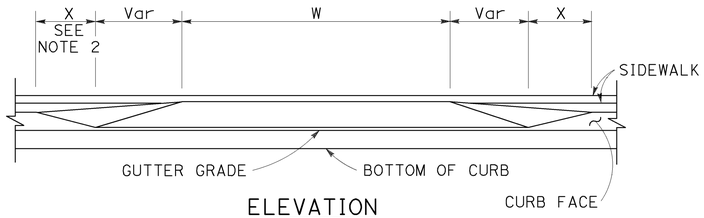

ELEVATION

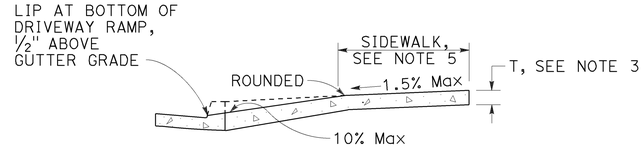

CASE A

Typical driveway, sidewalk not depressed

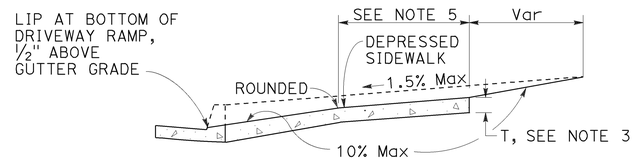

CASE B

Driveway with depressed sidewalk

SECTIONS

DRIVEWAYS

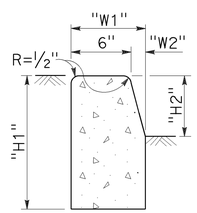

TYPE A1 CURBS

See Table A

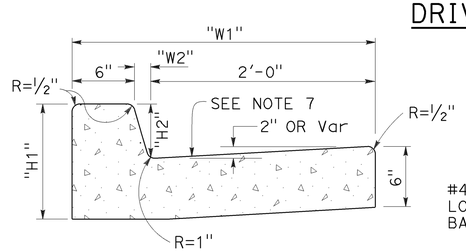

TYPE A2 CURBS

See Table A

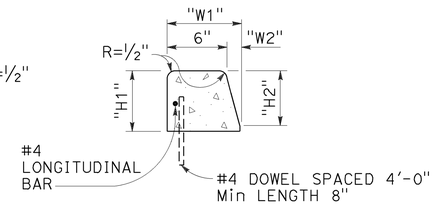

TYPE A3 CURBS

Superimposed on existing pavement
See Table A

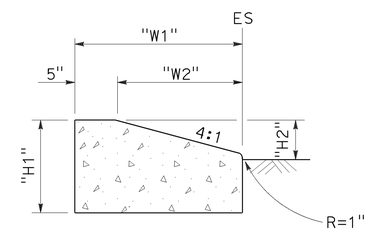

TYPE D CURBS

See Table A

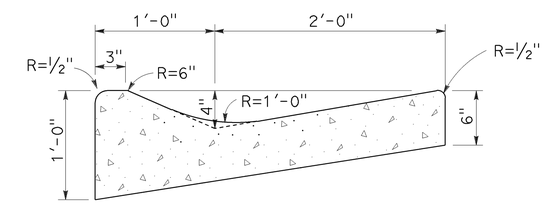

TYPE E CURB

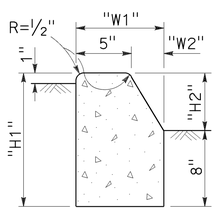

TYPE B1 CURBS

See Table A

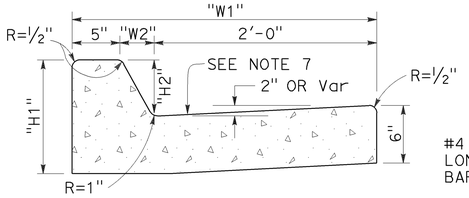

TYPE B2 CURBS

See Table A

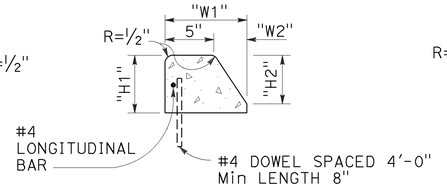

TYPE B3 CURBS

Superimposed on existing pavement
See Table A

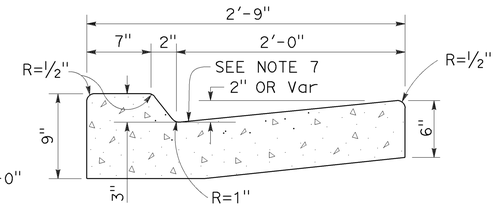

TYPE B4 CURBS

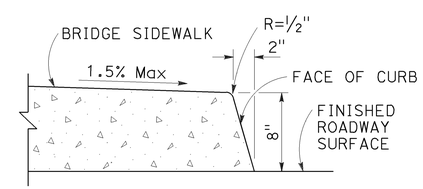

TYPE H CURB

On Bridges

CURBS

TABLE A

CURB TYPE	DIMENSIONS			
	"H1"	"H2"	"W1"	"W2"
A1-6	1'-2"	6"	7½"	1½"
A1-8	1'-4"	8"	8"	2"
A2-6	1'-0"	6"	2'-7½"	1½"
A2-8	1'-2"	8"	2'-8"	2"
A3-6	6"	5"	7¼"	1¼"
A3-8	8"	7"	7¾"	1¾"
B1-4	1'-0"	4"	7½"	2½"
B1-6	1'-2"	6"	9"	4"
B2-4	10"	4"	2'-7½"	2½"
B2-6	1'-0"	6"	2'-9"	4"
B3-4	4"	3"	7"	2"
B3-6	6"	5"	8½"	3½"
D-4	10"	4"	1'-6"	1'-1"
D-6	1'-0"	6"	2'-2"	1'-9"

CURB QUANTITIES

TYPE	CUBIC YARDS PER LINEAR FOOT
A1-6	0.02585
A1-8	0.03084
A2-6	0.05903
A2-8	0.06379
A3-6	0.01036
A3-8	0.01435
B1-4	0.02185
B1-6	0.02930
B2-4	0.05515
B2-6	0.06171
B3-4	0.00641
B3-6	0.01074
B4	0.05709
D-4	0.04083
D-6	0.06804
E	0.06661

NOTES:

1. Case A driveway section typically applies.
2. X=3'-0" except for curb heights over 10" where 4:1 slopes shall be used on curb slope.
3. Sidewalk and ramp thickness "T" at driveway shall be 4" for residental and 6" for commercial.
4. Difference in slope of the driveway ramp and the slope of a line between the gutter and a point on the roadway 5'-0" from gutter line shall not exceed 15%. Reduce driveway ramp slope, not gutter slope, where required.
5. Minimum width of clear passageway for sidewalk shall be 4'-2".
6. Retaining curbs and acquisition of construction easement may be necessary for narrow sidewalks or curb heights in excess of 6".
7. Across the pedestrian route at curb ramp locations, the gutter pan slope shall not exceed 1" of depth for each 2'-0" of width.

STATE OF CALIFORNIA
DEPARTMENT OF TRANSPORTATION

CURBS AND DRIVEWAYS

NO SCALE

RSP A87A DATED JULY 19, 2013 SUPERSEDES STANDARD PLAN A87A
DATED MAY 20, 2011 - PAGE 119 OF THE STANDARD PLANS BOOK DATED 2010.

REVISED STANDARD PLAN RSP A87A

7-8-13

Dist	COUNTY	ROUTE	POST MILES TOTAL PROJECT	SHEET No.	TOTAL SHEETS
07	LA	60	R24.4/R25.3	294	384

REGISTERED CIVIL ENGINEER

January 15, 2016
PLANS APPROVAL DATE

REGISTERED PROFESSIONAL ENGINEER
Michael Janzen
No. 44788
Exp. 3-31-16
CIVIL
STATE OF CALIFORNIA

THE STATE OF CALIFORNIA OR ITS OFFICERS OR AGENTS SHALL NOT BE RESPONSIBLE FOR THE ACCURACY OR COMPLETENESS OF SCANNED COPIES OF THIS PLAN SHEET.

TO ACCOMPANY PLANS DATED 3-14-16

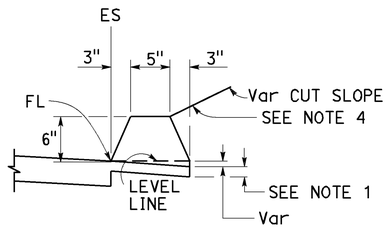

TYPE A
See Notes 3 and 5

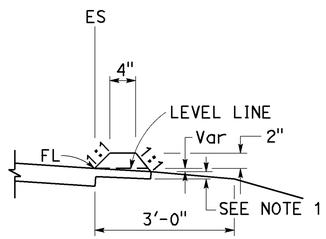

TYPE C

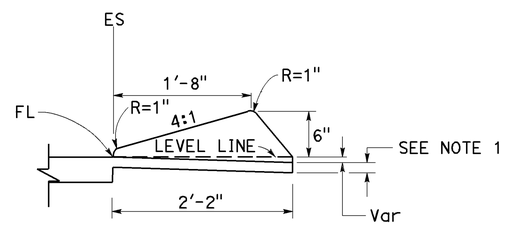

TYPE D

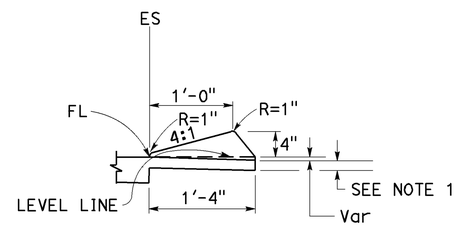

TYPE E

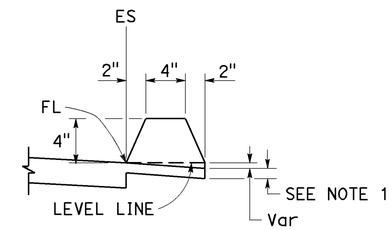

TYPE F
See Note 5

DIKES

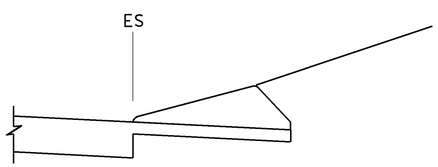

CASE C-1
Cut Slope

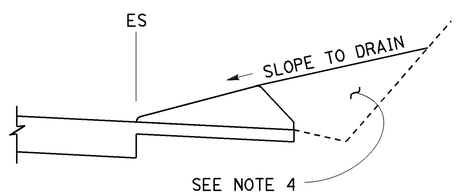

CASE C-2
Cut Slope

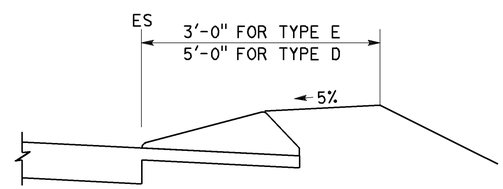

CASE F

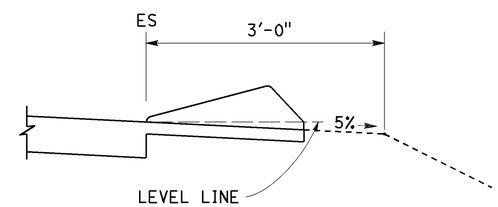

CASE R
See Note 2

TYPE D AND E BACKFILL DETAILS

NOTES:

1. For HMA shoulders only, extend top layer of HMA placed on the shoulder under dike with no joint at the ES. For projects with OGFC shoulders, do not extend OGFC under dike. See project plans for modified dike detail.
2. Case R applies to retrofit only projects where restrictive conditions do not provide enough width for Case F backfill.
3. Type A dike only to be used where restrictive slope conditions do not provide enough width to use Type D or Type E dike.
4. Fill and compact with excavated material to top of dike.
5. Use Type A or F dike, where dike is required with guardrail installations. See Revised Standard Plan RSP A77N4 for dike positioning details. See Revised Standard Plan RSP A77N3 for hinge point offsets with guardrail.

DIKE QUANTITIES

TYPE	CUBIC YARDS PER LINEAR FOOT
A	0.0135
C	0.0038
D	0.0293
E	0.0130
F	0.0066

Quantities based on 5% cross slope.

STATE OF CALIFORNIA
DEPARTMENT OF TRANSPORTATION

HOT MIX ASPHALT DIKES

NO SCALE

RSP A87B DATED JANUARY 15, 2016 SUPERSEDES RSP A87B DATED JULY 19, 2013 AND STANDARD PLAN A87B DATED MAY 20, 2011 - PAGE 120 OF THE STANDARD PLANS BOOK DATED 2010.

REVISED STANDARD PLAN RSP A87B

2010 REVISED STANDARD PLAN RSP A87B

11-17-15

Dist	COUNTY	ROUTE	POST MILES TOTAL PROJECT	SHEET No.	TOTAL SHEETS
07	LA	60	R24.4/R25.3	295	384

REGISTERED CIVIL ENGINEER

July 3, 2015
PLANS APPROVAL DATE

REGISTERED PROFESSIONAL ENGINEER Hector David Cordova No. C41957 Exp. 3-31-16 CIVIL STATE OF CALIFORNIA

THE STATE OF CALIFORNIA OR ITS OFFICERS OR AGENTS SHALL NOT BE RESPONSIBLE FOR THE ACCURACY OR COMPLETENESS OF SCANNED COPIES OF THIS PLAN SHEET.

TO ACCOMPANY PLANS DATED 3-14-16

2010 REVISED STANDARD PLAN RSP A88A

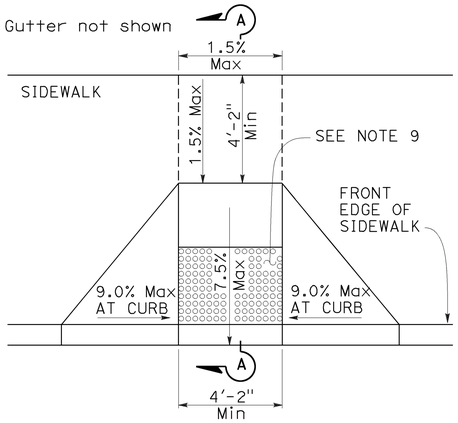

CASE A

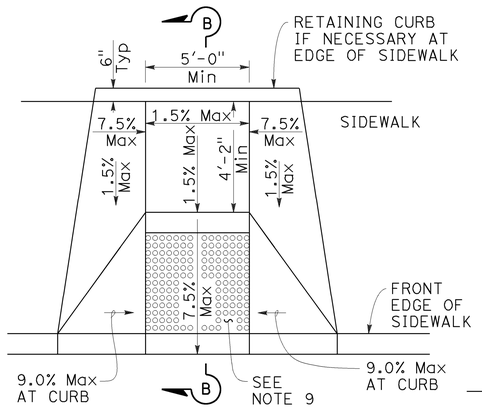

CASE B

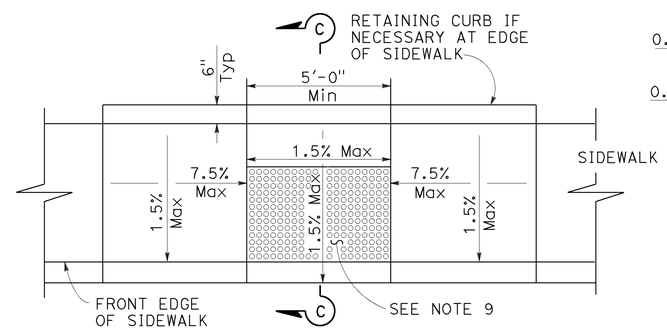

CASE C

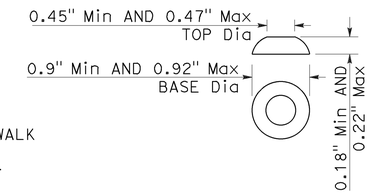

RAISED TRUNCATED DOME

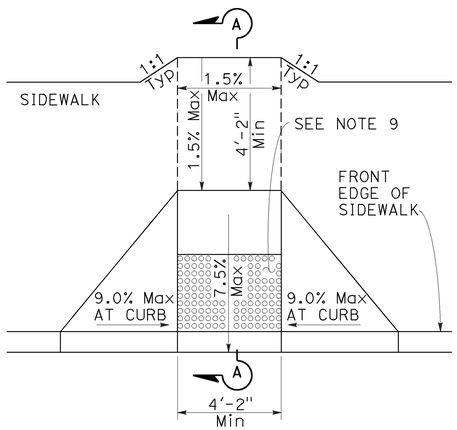

CASE D

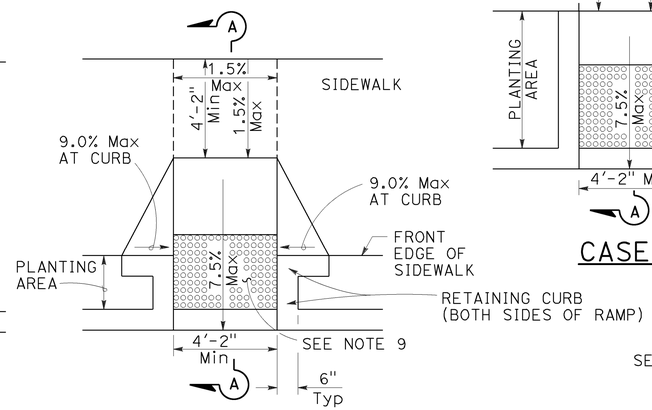

CASE E

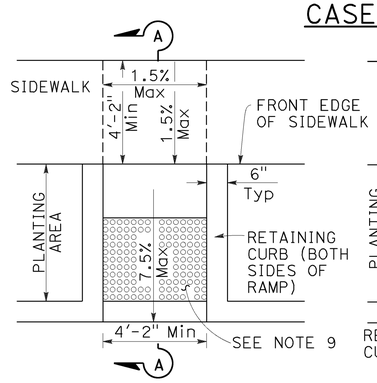

CASE F

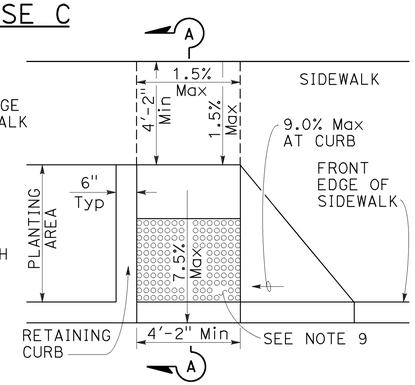

CASE G
See Note 4

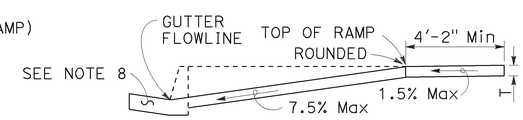

SECTION A-A

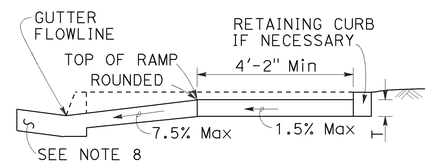

SECTION B-B
Depress entire sidewalk as required

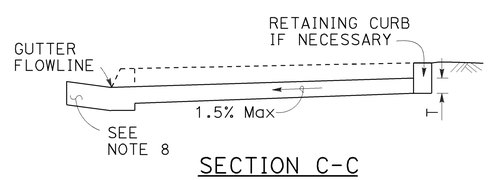

SECTION C-C

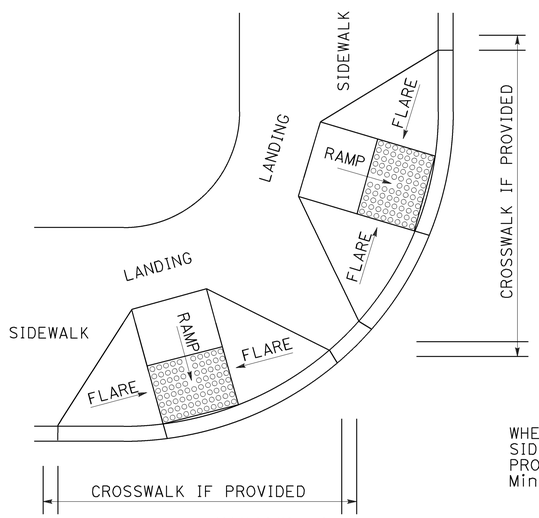

DETAIL A

TYPICAL TWO-RAMP CORNER INSTALLATION

See Note 1

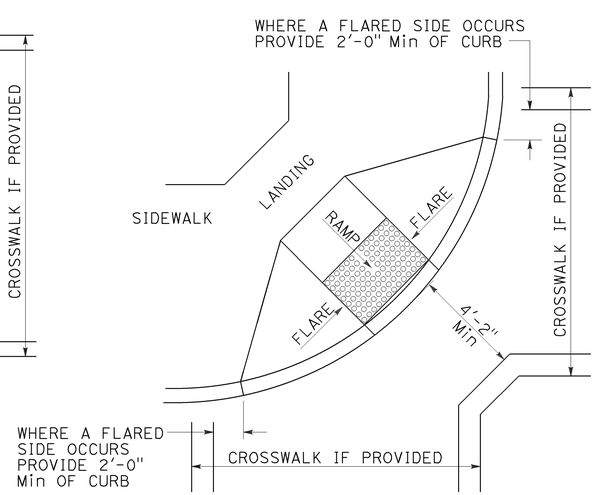

DETAIL B

TYPICAL ONE-RAMP CORNER INSTALLATION

See Notes 1 and 3

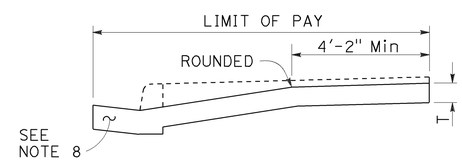

RETROFIT PAY LIMITS

Existing curb and sidewalk

NOTES:

1. As site conditions dictate, Case A through Case G curb ramps may be used for corner installations similar to those shown in Detail A and Detail B. The case of curb ramps used in Detail A do not have to be the same. Case A through Case G curb ramps also may be used at mid block locations, as site conditions dictate.
2. If distance from curb to back of sidewalk is too short to accommodate ramp and 4'-2" platform (landing) as shown in Case A, the sidewalk may be depressed longitudinally as in Case B, or C or may be widened as in Case D.
3. When ramp is located in center of curb return, crosswalk configuration must be similar to that shown for Detail B.
4. As site conditions dictate, the retaining curb side and the flared side of the Case G ramp shall be constructed in reversed position.
5. If located on a curve, the sides of the ramp need not be parallel, but the minimum width of the ramp shall be 4'-2".
6. Side slope of ramp flares vary uniformly from a maximum of 9.0% at curb to conform with longitudinal sidewalk slope adjacent to top of the ramp, except in Case C and Case F.
7. Transitions from ramps and landing to walks, gutters or streets shall be flush (no lip) and free of abrupt changes.
8. Counter slopes of adjoining gutters and road surfaces immediately adjacent to and within 24 inches of the curb ramp shall not be steeper than 1:20 (5.0%). Gutter pan slope shall not exceed 1" of depth for each 2'-0" of width.
9. Curb ramps shall have a detectable warning surface that extends the full width and 3'-0" depth of the ramp. A 4'-0" wide detectable warning surface may be used on a 4'-2" wide curb ramp. Detectable Warning Surfaces shall conform to the requirements in the Standard Specifications.
10. Sidewalk and ramp thickness, "T", shall be 3½" minimum.
11. Utility pull boxes, manholes, vaults and all other utility facilities within the boundaries of the curb ramp will be relocated or adjusted to grade by the owner prior to, or in conjunction with, curb ramp construction.
12. Detectable warning surface may have to be cut to allow removal of utility covers while maintaining full detectable warning width and depth.

RAISED TRUNCATED DOME PATTERN (IN-LINE)

DETECTABLE WARNING SURFACE

See Note 9

STATE OF CALIFORNIA
DEPARTMENT OF TRANSPORTATION

CURB RAMP DETAILS

NO SCALE

RSP A88A DATED JULY 3, 2015 SUPERSEDES RSP A88A DATED MARCH 21, 2014 AND RSP A88A DATED JULY 19, 2013 AND STANDARD PLAN A88A DATED MAY 20, 2011 - PAGE 121 OF THE STANDARD PLANS BOOK DATED 2010.

REVISED STANDARD PLAN RSP A88A

6-30-15

Dist	COUNTY	ROUTE	POST MILES TOTAL PROJECT	SHEET No.	TOTAL SHEETS
07	LA	60	R24.4/R25.3	296	384

REGISTERED CIVIL ENGINEER

July 3, 2015
PLANS APPROVAL DATE

REGISTERED PROFESSIONAL ENGINEER Hector David Cordova No. C41957 Exp. 3-31-16 CIVIL STATE OF CALIFORNIA

THE STATE OF CALIFORNIA OR ITS OFFICERS OR AGENTS SHALL NOT BE RESPONSIBLE FOR THE ACCURACY OR COMPLETENESS OF SCANNED COPIES OF THIS PLAN SHEET.

TO ACCOMPANY PLANS DATED 3-14-16

Gutter not shown

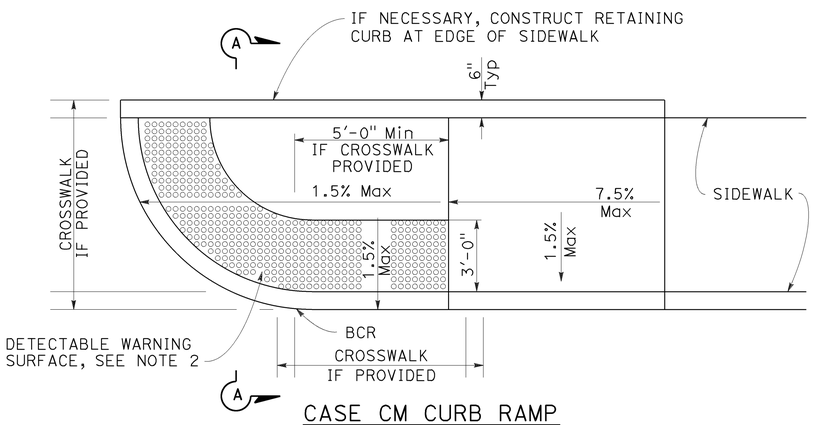

CASE CM CURB RAMP

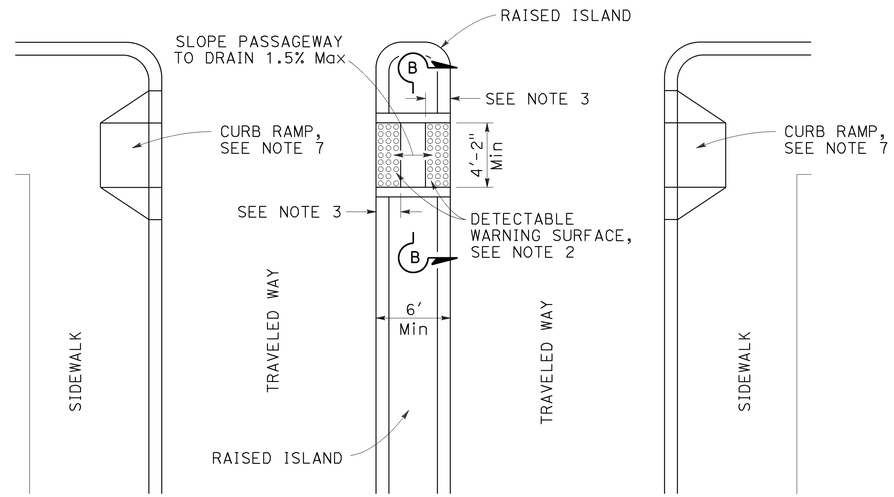

TYPE A PASSAGEWAY

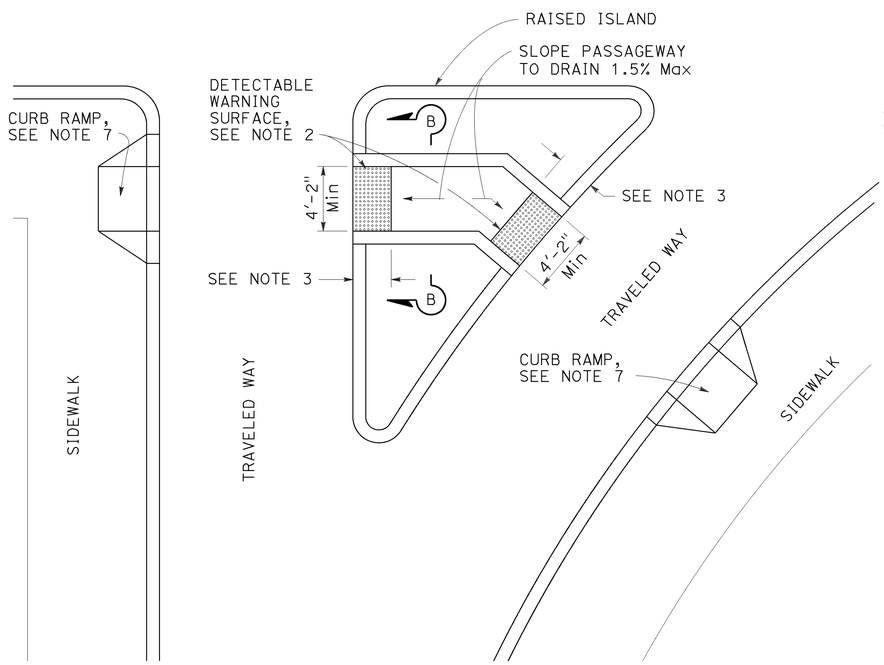

TYPE B PASSAGEWAY

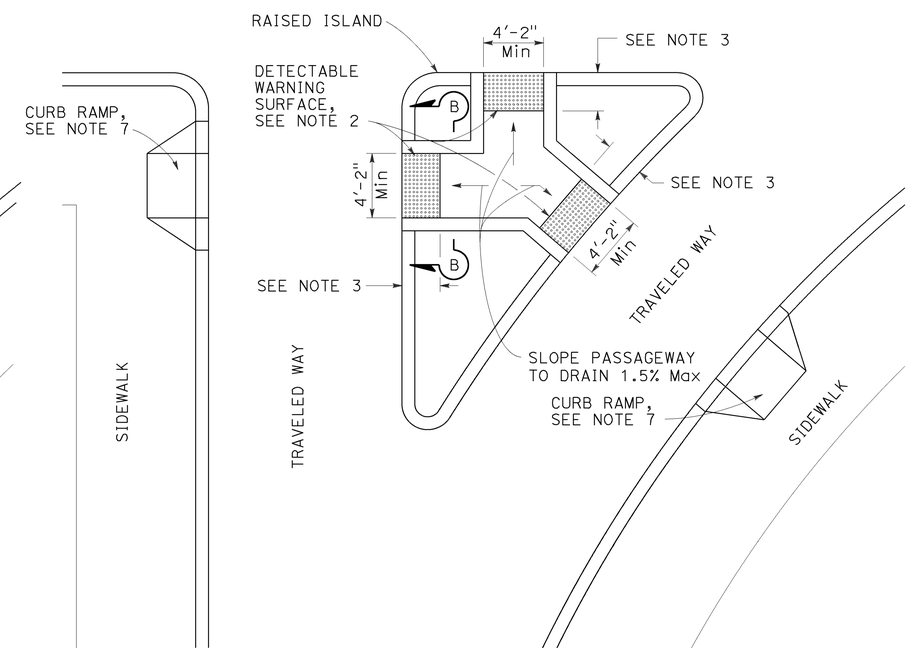

TYPE C PASSAGEWAY

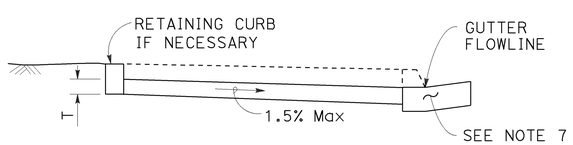

SECTION A-A

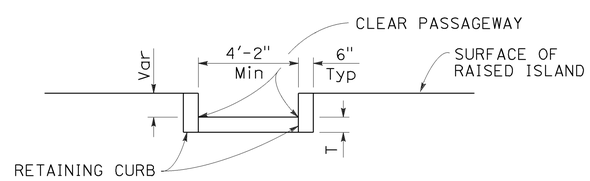

SECTION B-B

NOTES:

1. Sidewalk, ramp and passageway thickness, "T", shall be 3½" minimum.
2. For details of detectable warning surfaces, see Revised Standard Plan RSP A88A.
3. Where an island passageway length is greater than or equal to 6'-0", but less than 8'-0", each detectable warning surface shall extend the full width and 2'-0" depth of the passageway length. Where an island passageway length is greater than or equal to 8'-0", each detectable warning surface shall extend the full width and 3'-0" depth of the passageway length. A 4'-0" wide detectable warning surface may be used on a 4'-2" wide island passageway.
4. Transitions from ramps to walks, gutters or streets shall be flush (no lip) and free of abrupt changes.
5. Utility pull boxes, manholes, vaults and all other utility facilities within the boundaries of the curb ramp will be relocated or adjusted to grade by the owner prior to, or in conjunction with, curb ramp construction.
6. Detectable warning surface may have to be cut to allow removal of utility covers while maintaining full detectable warning width and depth.
7. For additional curb ramp details, see Revised Standard Plan RSP A88A.

STATE OF CALIFORNIA
DEPARTMENT OF TRANSPORTATION

CURB RAMP AND ISLAND PASSAGEWAY DETAILS

NO SCALE

RSP A88B DATED JULY 3, 2015 SUPERSEDES RSP A88B DATED MARCH 21, 2014 AND RSP A88B DATED JULY 19, 2013 AND STANDARD PLAN A88B DATED MAY 20, 2011 - PAGE 122 OF THE STANDARD PLANS BOOK DATED 2010.

REVISED STANDARD PLAN RSP A88B

2010 REVISED STANDARD PLAN RSP A88B

4-28-15

Dist	COUNTY	ROUTE	POST MILES TOTAL PROJECT	SHEET No.	TOTAL SHEETS
07	LA	60	R24.4/R25.3	297	384

William K. Farnbach
REGISTERED CIVIL ENGINEER

July 19, 2013
PLANS APPROVAL DATE

REGISTERED PROFESSIONAL ENGINEER
William K. Farnbach
No. C49042
Exp. 9-30-14
CIVIL
STATE OF CALIFORNIA

THE STATE OF CALIFORNIA OR ITS OFFICERS OR AGENTS SHALL NOT BE RESPONSIBLE FOR THE ACCURACY OR COMPLETENESS OF SCANNED COPIES OF THIS PLAN SHEET.

TO ACCOMPANY PLANS DATED 3-14-16

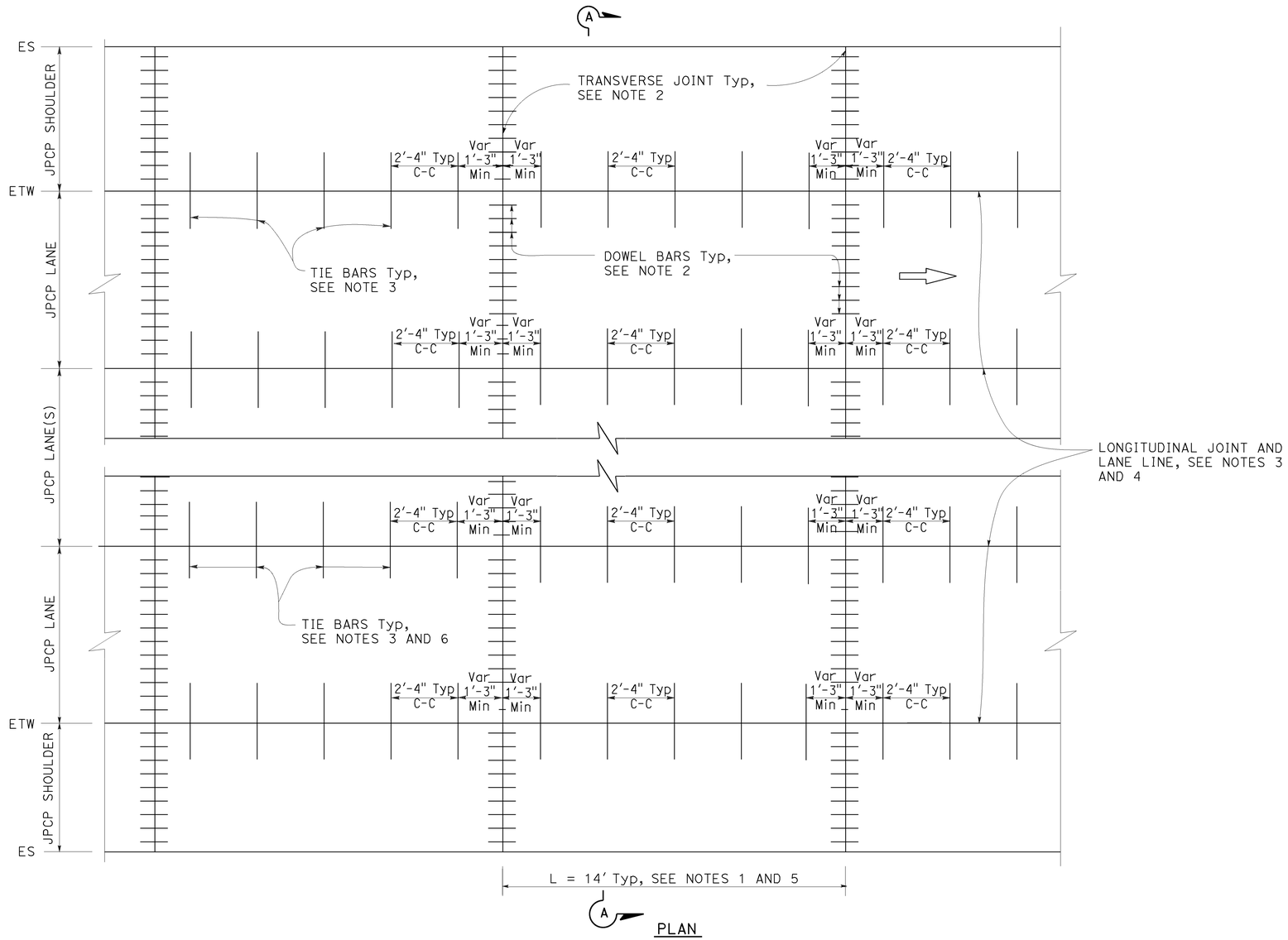

PLAN

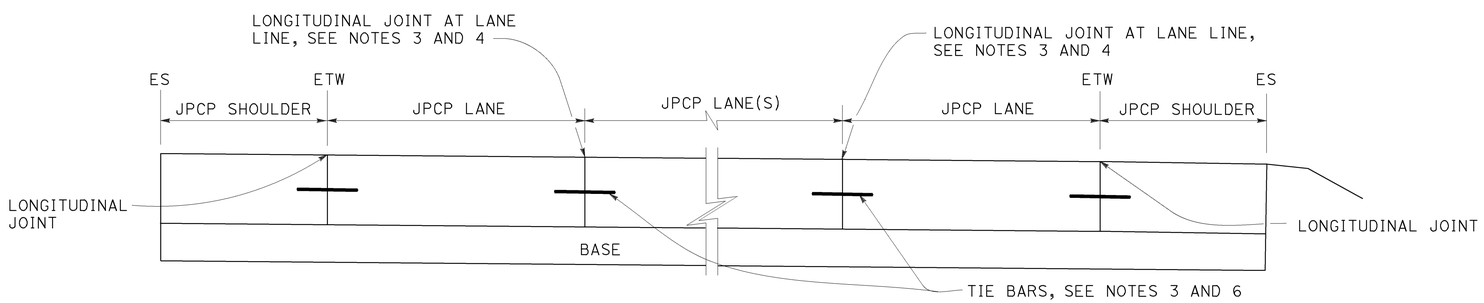

SECTION A-A

NOTES:

1. Transverse joint spacing may be adjusted to no less than 10' and no more than 14' to conform to bridges, change in pavement type, and hardened concrete pavement.
2. For transverse joint and dowel bar details not shown, see Revised Standard Plan RSP P10.
3. For longitudinal joint and tie bar details not shown, see Revised Standard Plan RSP P15.
4. For additional longitudinal joint layout details, see Revised Standard Plan RSP P18.
5. For joint layout at intersections, see Project Plans.
6. For dowel bars at longitudinal joint. see Revised Standard Plan RSP P18.

STATE OF CALIFORNIA
DEPARTMENT OF TRANSPORTATION

JOINTED PLAIN CONCRETE PAVEMENT NEW CONSTRUCTION

NO SCALE

RSP P1 DATED JULY 19, 2013 SUPERSEDES STANDARD PLAN P1
DATED MAY 20, 2011 - PAGE 125 OF THE STANDARD PLANS BOOK DATED 2010.

REVISED STANDARD PLAN RSP P1

2010 REVISED STANDARD PLAN RSP P1

5-31-13

Dist	COUNTY	ROUTE	POST MILES TOTAL PROJECT	SHEET No.	TOTAL SHEETS
07	LA	60	R24.4/R25.3	298	384

William K. Farnbach
REGISTERED CIVIL ENGINEER

July 19, 2013
PLANS APPROVAL DATE

REGISTERED PROFESSIONAL ENGINEER William K. Farnbach No. C49042 Exp. 9-30-14 CIVIL STATE OF CALIFORNIA

THE STATE OF CALIFORNIA OR ITS OFFICERS OR AGENTS SHALL NOT BE RESPONSIBLE FOR THE ACCURACY OR COMPLETENESS OF SCANNED COPIES OF THIS PLAN SHEET.

TO ACCOMPANY PLANS DATED 3-14-16

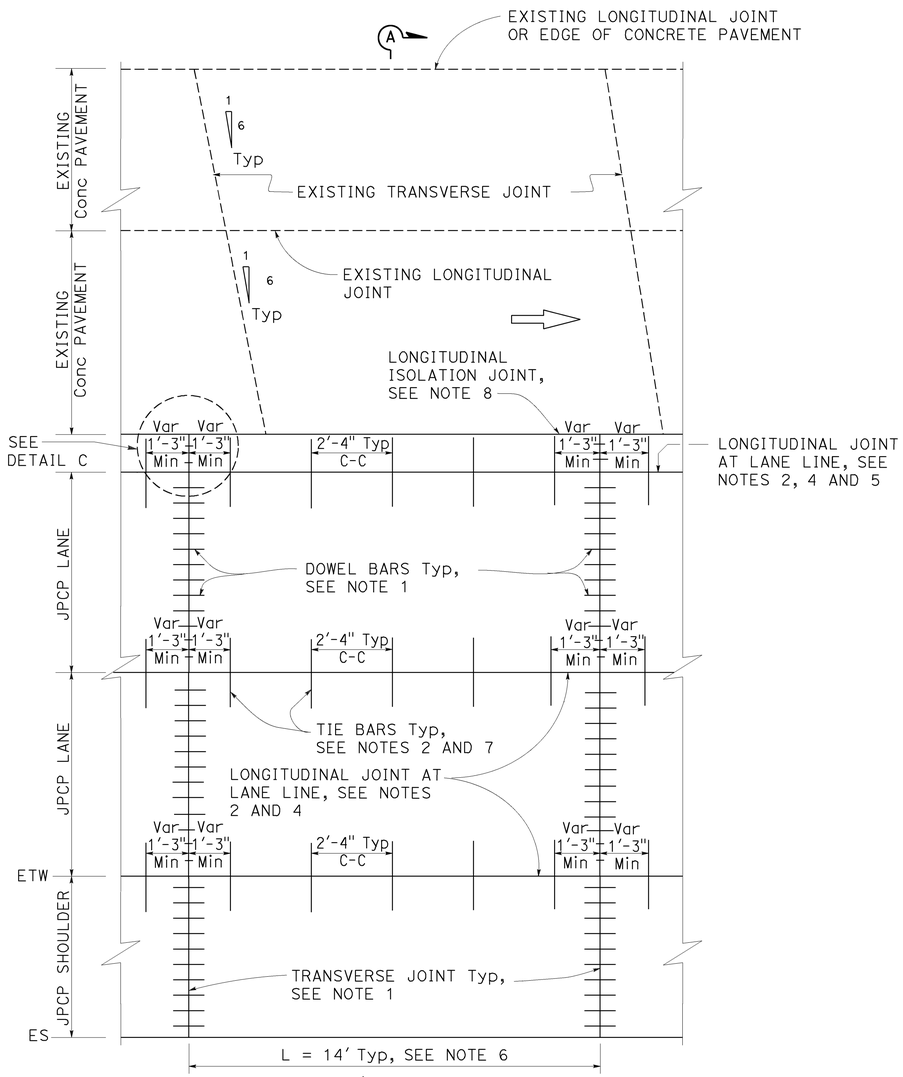

A
PLAN
ISOLATED
See Note 3

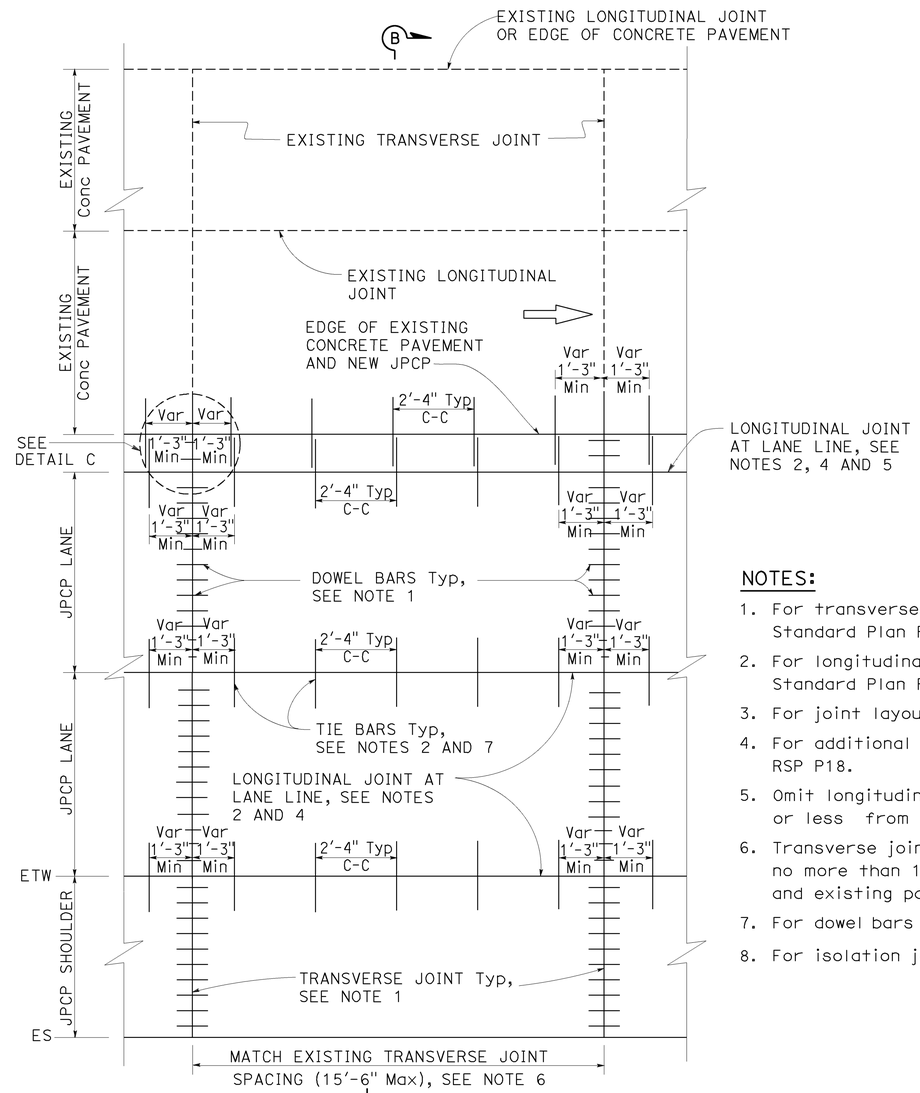

B
PLAN
TIED
See Note 3

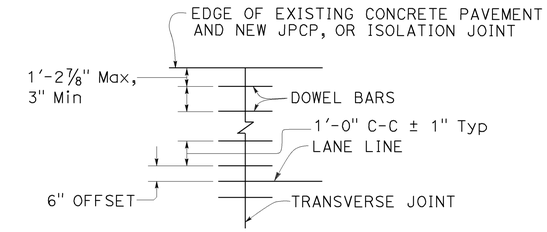

DETAIL C

NOTES:

1. For transverse joint and dowel bar details not shown, see Revised Standard Plan RSP P10.
2. For longitudinal joint and tie bar details not shown, see Revised Standard Plan RSP P15.
3. For joint layout at intersections, see Project Plans.
4. For additional longitudinal joint details, see Revised Standard Plan RSP P18.
5. Omit longitudinal joint when edge of new concrete pavement is 3'-3" or less from JPCP lane line.
6. Transverse joint spacing may be adjusted to no less than 10' and no more than 15'-6" to conform to bridges, change in pavement type and existing pavement.
7. For dowel bars at longitudinal joint. see Revised Standard Plan RSP P18.
8. For isolation joints, see Detail A on Revised Standard Plan RSP P18.

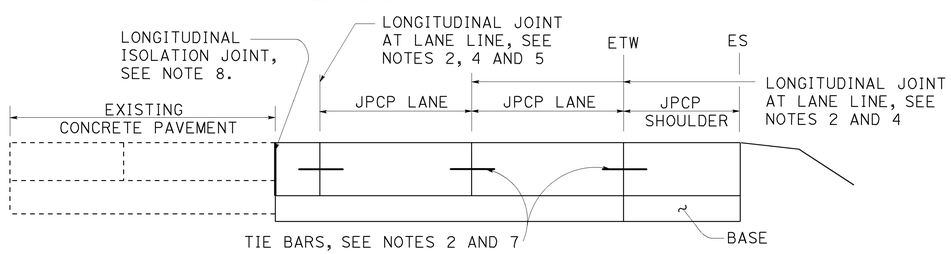

SECTION A-A

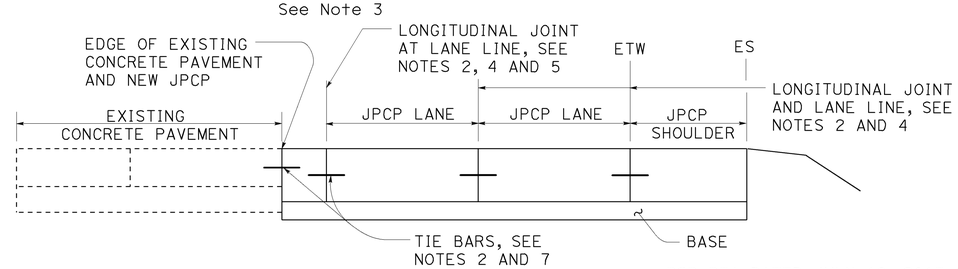

SECTION B-B

STATE OF CALIFORNIA
DEPARTMENT OF TRANSPORTATION

JOINTED PLAIN CONCRETE PAVEMENT LANE & SHOULDER ADDITION OR REPLACEMENT

NO SCALE

RSP P3A DATED JULY 19, 2013 SUPPLEMENTS THE STANDARD PLANS BOOK DATED 2010.

REVISED STANDARD PLAN RSP P3A

2010 REVISED STANDARD PLAN RSP P3A

5-31-13

Dist	COUNTY	ROUTE	POST MILES TOTAL PROJECT	SHEET No.	TOTAL SHEETS
07	LA	60	R24.4/R25.3	299	384

William K. Farnbach
REGISTERED CIVIL ENGINEER

July 19, 2013
PLANS APPROVAL DATE

REGISTERED PROFESSIONAL ENGINEER William K. Farnbach No. C49042 Exp. 9-30-14 CIVIL STATE OF CALIFORNIA

THE STATE OF CALIFORNIA OR ITS OFFICERS OR AGENTS SHALL NOT BE RESPONSIBLE FOR THE ACCURACY OR COMPLETENESS OF SCANNED COPIES OF THIS PLAN SHEET.

TO ACCOMPANY PLANS DATED 3-14-16

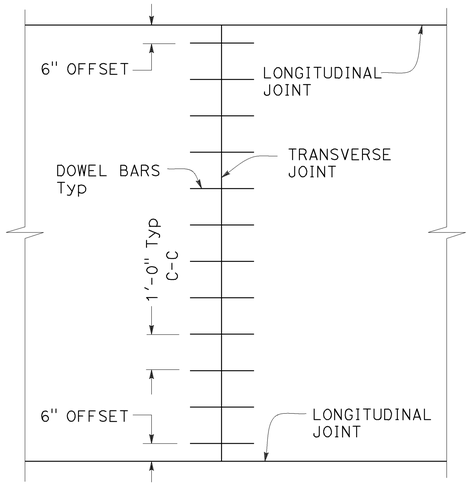

TRANSVERSE JOINT DOWEL BAR LAYOUT

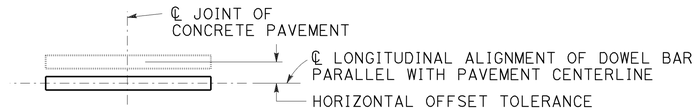

PLAN

HORIZONTAL OFFSET TOLERANCE

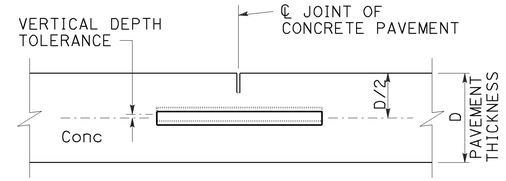

ELEVATION

VERTICAL DEPTH TOLERANCE

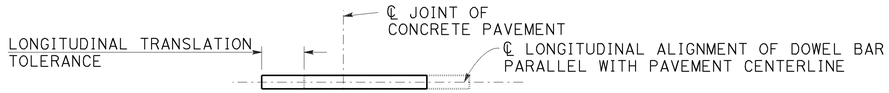

PLAN

LONGITUDINAL TRANSLATION TOLERANCE

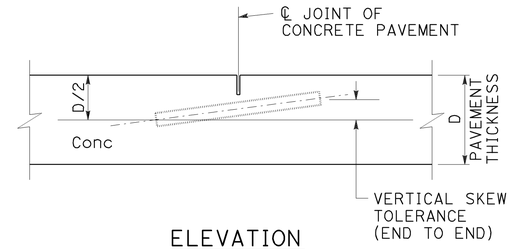

ELEVATION

VERTICAL SKEW TOLERANCE

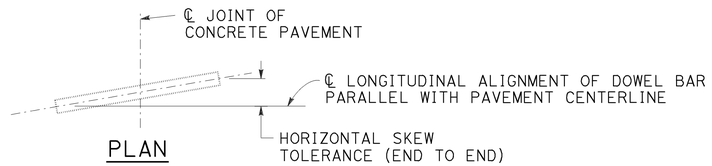

PLAN

HORIZONTAL SKEW TOLERANCE

NOTES:

1. See Revised Standard Plan RSP P1 for typical dowel bar placement and locations.
2. Where fresh concrete pavement is placed against new concrete or existing concrete pavement, rounding the corner of the existing concrete pavement is not required.
3. May also use ¾" Dia dowel bars 2'-4" ± ¼" in length. Center the length of dowel bars at the centerline of longitudinal joint.

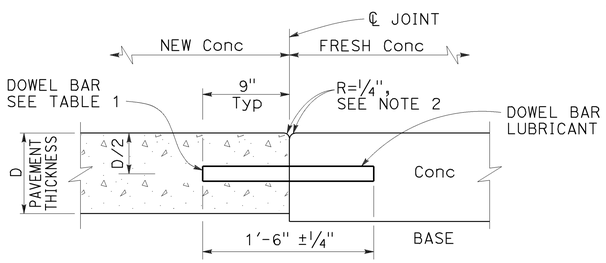

TRANSVERSE CONSTRUCTION JOINT DETAIL

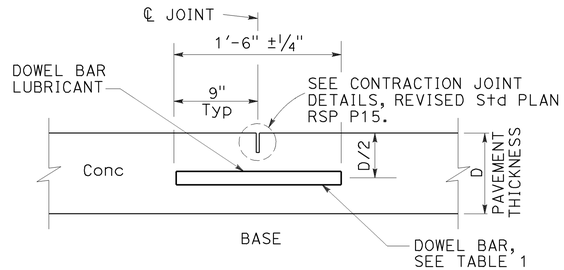

TRANSVERSE CONTRACTION JOINT

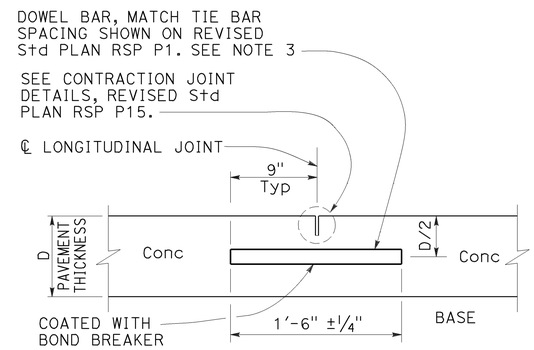

LONGITUDINAL CONTRACTION JOINT WITH DOWEL BARS

See Revised Std Plan RSP P18

TABLE 1

DOWEL BAR DIAMETER TABLE			
PAVEMENT THICKNESS	0.65'	> 0.65' - 0.85'	> 0.85'
MINIMUM DOWEL * BAR DIAMETER	1"	1¼"	1½"

* The drilled hole diameter must be ⅛" to 3/16" larger than the bar diameter.

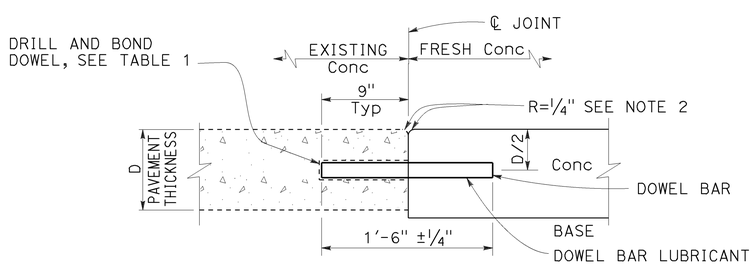

TRANSVERSE CONSTRUCTION JOINT FOR EXISTING CONCRETE PAVEMENT

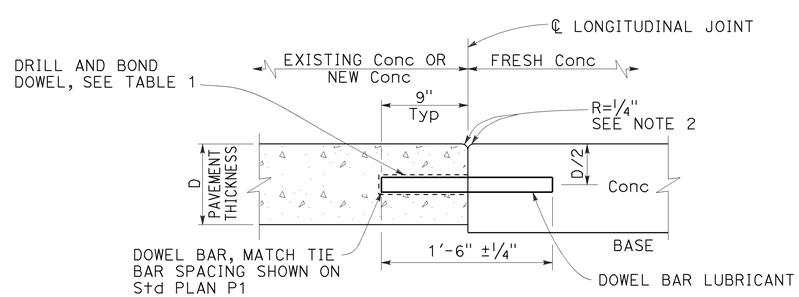

LONGITUDINAL CONSTRUCTION JOINT WITH DOWEL BARS

See Revised Std Plan RSP P18

STATE OF CALIFORNIA
DEPARTMENT OF TRANSPORTATION

CONCRETE PAVEMENT DOWEL BAR DETAILS

NO SCALE

RSP P10 DATED JULY 19, 2013 SUPERSEDES RSP P10 DATED APRIL 20, 2012 AND STANDARD PLAN P10 DATED MAY 20, 2011 - PAGE 131 OF THE STANDARD PLANS BOOK DATED 2010.

REVISED STANDARD PLAN RSP P10

2010 REVISED STANDARD PLAN RSP P10

5-31-13

Dist	COUNTY	ROUTE	POST MILES TOTAL PROJECT	SHEET No.	TOTAL SHEETS
07	LA	60	R24.4/R25.3	300	384

William K. Farnbach
REGISTERED CIVIL ENGINEER

July 19, 2013
PLANS APPROVAL DATE

REGISTERED PROFESSIONAL ENGINEER William K. Farnbach No. C49042 Exp. 9-30-14 CIVIL STATE OF CALIFORNIA

THE STATE OF CALIFORNIA OR ITS OFFICERS OR AGENTS SHALL NOT BE RESPONSIBLE FOR THE ACCURACY OR COMPLETENESS OF SCANNED COPIES OF THIS PLAN SHEET.

TO ACCOMPANY PLANS DATED 3-14-16

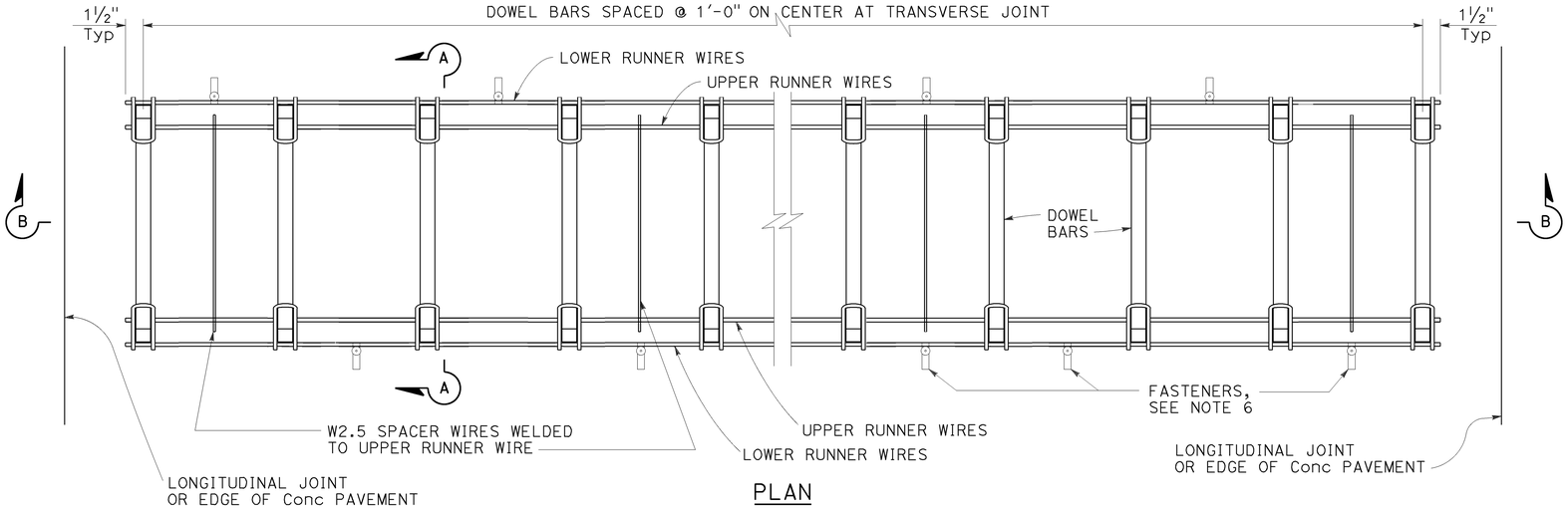

PLAN

DOWEL BAR BASKET (TRANSVERSE JOINT)

See Note 1

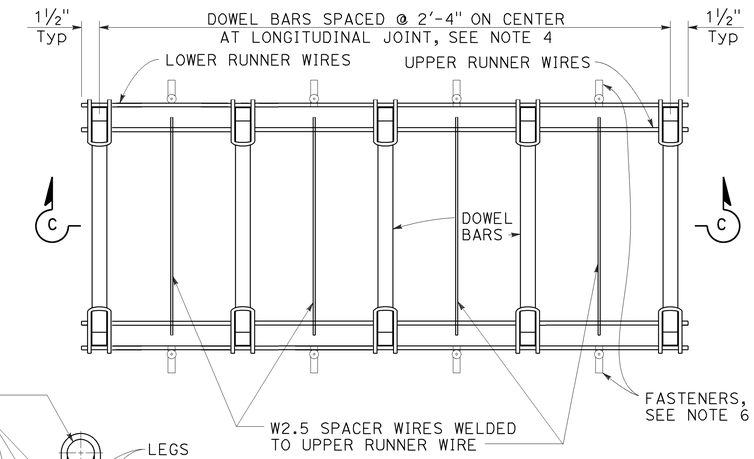

PLAN

DOWEL BAR BASKET (LONGITUDINAL JOINT)

See Note 1

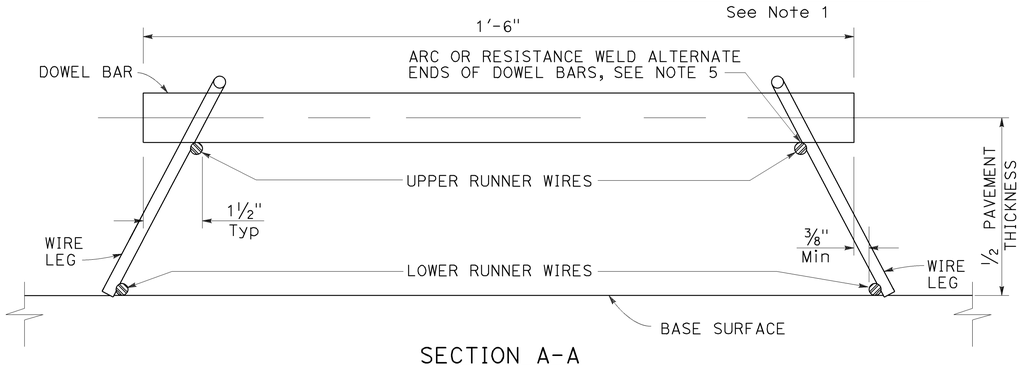

SECTION A-A

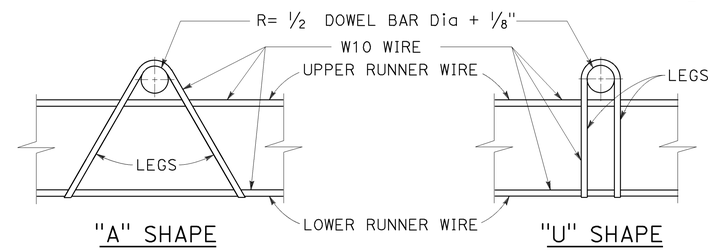

ASSEMBLY FRAME DETAILS

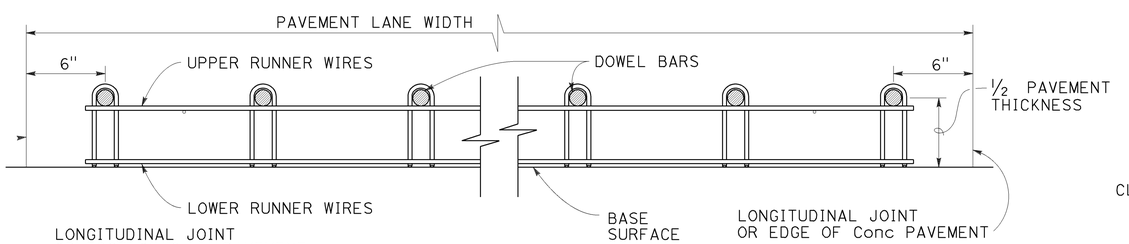

SECTION B-B

See Note 1

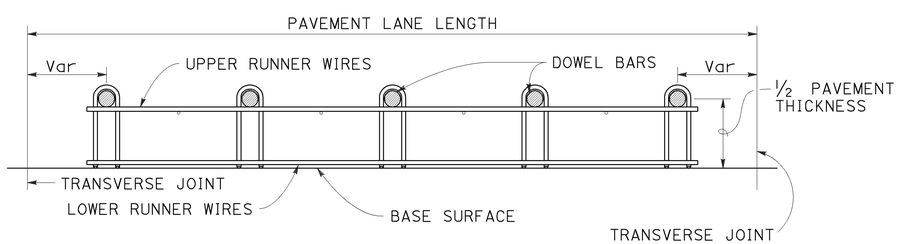

SECTION C-C

See Notes 1 and 4

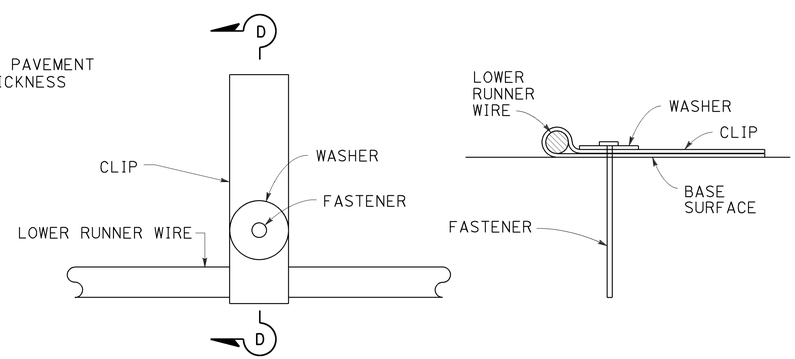

PLAN

SECTION D-D

FASTENER DETAIL

See Note 6

NOTES:

1. "U" frame shape assembly shown. Use either "U" frame shape or "A" frame shape.
2. Wire sizes shown are the minimum required.
3. All wire intersections must be resistance welded.
4. Use tie bar spacing for longitudinal dowel bar locations. See Revised Standard Plans RSP P1, RSP P2, RSP P3A, and RSP P3B for tie bar requirements.
5. Weld may be at the top or bottom of the dowel bar.
6. Use anchor pins where soil or granular base is used. See Revised Standard Plan RSP P17 for Anchor Pin Detail.

STATE OF CALIFORNIA
DEPARTMENT OF TRANSPORTATION

CONCRETE PAVEMENT DOWEL BAR BASKET DETAILS

NO SCALE

RSP P12 DATED JULY 19, 2013 SUPERSEDES STANDARD PLAN P12 DATED MAY 20, 2011 - PAGE 132 OF THE STANDARD PLANS BOOK DATED 2010.

REVISED STANDARD PLAN RSP P12

2010 REVISED STANDARD PLAN RSP P12

5-31-13