Dist	COUNTY	ROUTE	POST MILES TOTAL PROJECT	SHEET No.	TOTAL SHEETS
07	LA,Ora	5	0.0/1.5, 44.3/44.4	103	1622

H S Chen 4-2-14
REGISTERED CIVIL ENGINEER DATE

1-25-16
PLANS APPROVAL DATE

REGISTERED PROFESSIONAL ENGINEER H.S. CHEN No. C48908 Exp. 9-30-16 CIVIL STATE OF CALIFORNIA

THE STATE OF CALIFORNIA OR ITS OFFICERS OR AGENTS SHALL NOT BE RESPONSIBLE FOR THE ACCURACY OR COMPLETENESS OF SCANNED COPIES OF THIS PLAN SHEET.

LEGEND SHEETS C-50 TO C-59:

REMOVE CONCRETE PAVEMENT

OBLITERATE SURFACING

(X) REMOVE ITEM No.

No.	REMOVAL ITEMS	UNITS
1	REMOVE CONCRETE BARRIER	LF
2	REMOVE CONCRETE PAVEMENT	CY
3	REMOVE GUARD RAILING	LF
4	REMOVE CONCRETE (CURB AND GUTTER)	LF
5	REMOVE CONCRETE SIDEWALK	SQYD
6	REMOVE CONCRETE SIDEWALK AND DRIVEWAY	CY
7	REMOVE CONCRETE BARRIER (TYPE K)	LF
8	REMOVE DOUBLE METAL BEAM BARRIER	LF
9	REMOVE CHAIN LINK FENCE	LF
10	REMOVE METAL RAILING	LS
11	REMOVE GATE	EA
12	REMOVE Conc (Misc)	SQFT
13	OBLITERATE SURFACING	SQYD
14	REMOVE AC SURFACING	SQFT
15	REMOVE RETAINING WALL	~~SQFT~~ CY
16	REMOVE CONCRETE MASONRY BLOCK WALL	SQFT

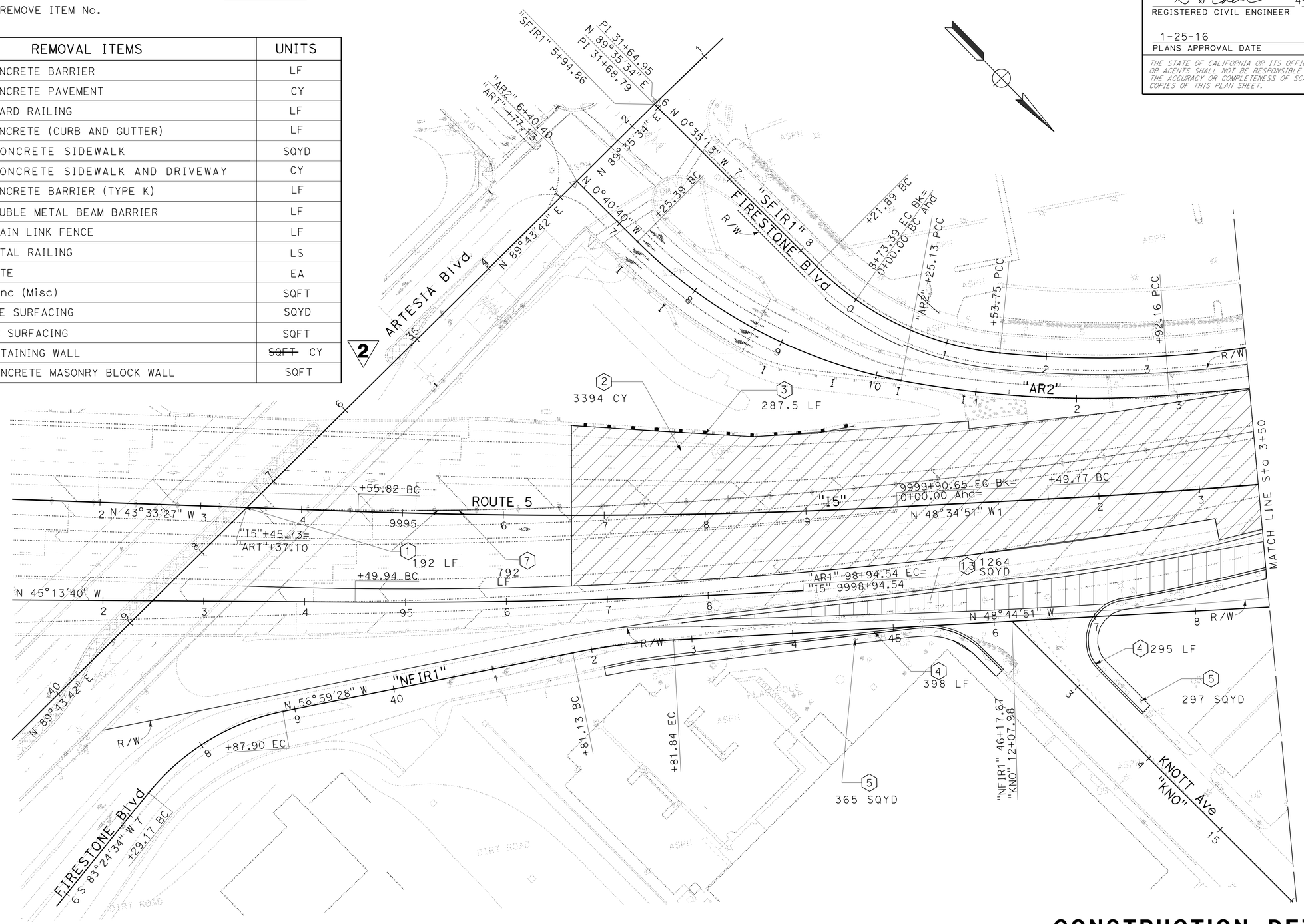

2 REPLACE PER ADDENDUM No. 2 DATED MARCH 30, 2016

CONSTRUCTION DETAILS

REMOVAL PLAN

SCALE: 1" = 50'

C-50

STATE OF CALIFORNIA - DEPARTMENT OF TRANSPORTATION

Caltrans® DESIGN

FUNCTIONAL SUPERVISOR: RICHARD CHIANG

CALCULATED-DESIGNED BY: J. CHUANG

CHECKED BY: H.S. CHEN

REVISED BY / DATE REVISED

LAST REVISION 00-00-00

DATE PLOTTED => 25-MAR-2016
TIME PLOTTED => 13:40

Dist	COUNTY	ROUTE	POST MILES TOTAL PROJECT	SHEET No.	TOTAL SHEETS
07	LA,Ora	5	0.0/1.5, 44.3/44.4	116	1622

H S Chen 4-2-14
REGISTERED CIVIL ENGINEER DATE

1-25-16
PLANS APPROVAL DATE

REGISTERED PROFESSIONAL ENGINEER H.S. CHEN No. C48908 Exp. 9-30-16 CIVIL STATE OF CALIFORNIA

THE STATE OF CALIFORNIA OR ITS OFFICERS OR AGENTS SHALL NOT BE RESPONSIBLE FOR THE ACCURACY OR COMPLETENESS OF SCANNED COPIES OF THIS PLAN SHEET.

NOTES FOR SHEETS C-63 TO C-88:

1. SEE STAGE CONSTRUCTION PLANS FOR STRIPING, THE LOCATION OF Temp RAILING (TYPE K), AND Temp CL FENCE
2. APPROVED COUNTOUR GRADING FOR SURCHARGE
3. SEE STRUCTURE PLANS FOR STRUCTURE ALIGNMENTS
4. SEE STANDARD SPECIFICATIONS: SECTION 5, 5-1.36A GENERAL

LEGEND FOR SHEETS C-63 TO C-88:

- SURCHARGE
- ROADWAY EMBANKMENT
- ROADWAY EXCAVATION
- DIRECTION OF TRAFFIC

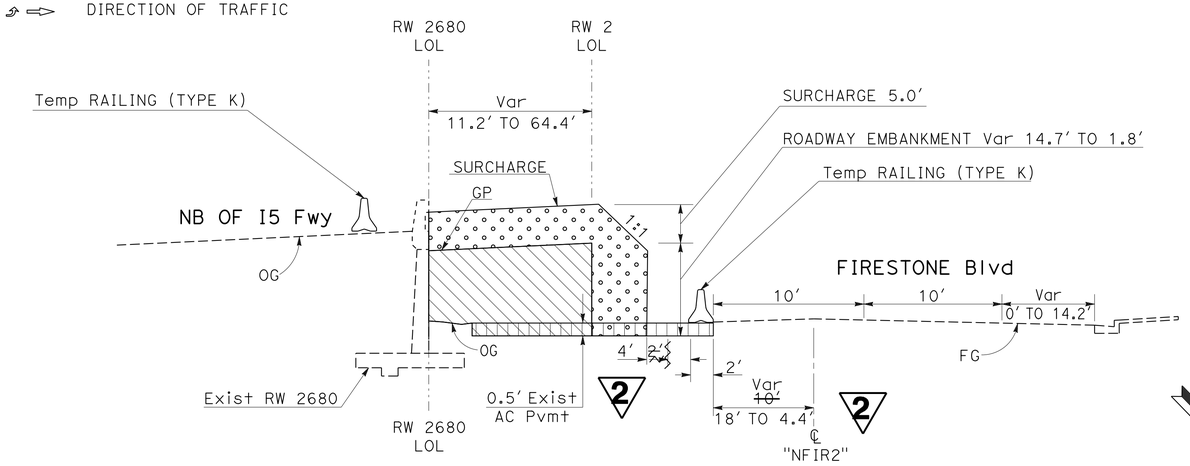

NB OF I5 Fwy, & RW 2 (TYPICAL SURCHARGE)
RW 2 LOL (Sta 12+47.00 TO 17+~~88.12~~ 46.03)
SECTION A-A
(STAGE 1 PHASE 3)
NO SCALE

END SURCHARGE "I5" Sta 3+95.91 =
RW 2 Sta 17+46.03

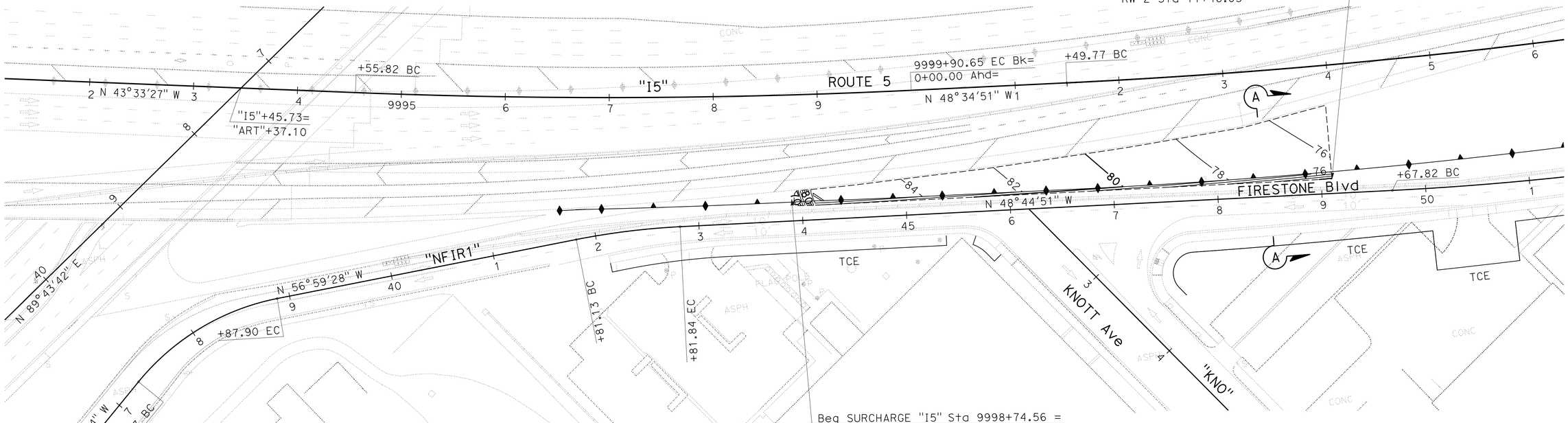

Beg SURCHARGE "I5" Sta 9998+74.56 =
RW 2 Sta 12+28.00

CONSTRUCTION DETAILS
SURCHARGE
SCALE: 1" = 50'

2 REPLACE PER ADDENDUM No. 2 DATED MARCH 30, 2016

C-63

STATE OF CALIFORNIA - DEPARTMENT OF TRANSPORTATION
Caltrans DESIGN
FUNCTIONAL SUPERVISOR RICHARD CHIANG
CALCULATED-DESIGNED BY EDUARDO M. DEL PILAR
CHECKED BY H.S. CHEN
REVISED BY
DATE REVISED

LAST REVISION 00-00-00
DATE PLOTTED => 25-MAR-2016
TIME PLOTTED => 13:40

Dist	COUNTY	ROUTE	POST MILES TOTAL PROJECT	SHEET No.	TOTAL SHEETS
07	LA,Ora	5	0.0/1.5, 44.3/44.4	527	1622

Zewdie Burka 4-2-14
REGISTERED CIVIL ENGINEER DATE

1-25-16
PLANS APPROVAL DATE

REGISTERED PROFESSIONAL ENGINEER ZEWDIE BURKA No. C63554 Exp. 9/30/16 CIVIL STATE OF CALIFORNIA

THE STATE OF CALIFORNIA OR ITS OFFICERS OR AGENTS SHALL NOT BE RESPONSIBLE FOR THE ACCURACY OR COMPLETENESS OF SCANNED COPIES OF THIS PLAN SHEET.

U-3 Continue

POTHOLE No.	NORTHING/EASTING	UTILITY COMPANY	SURFACE/GROUND ELEVATION (ft)	DEPTH (ft)
328	1777992.27 6556702.33	SCE ELECTRIC	66.61	2 4.00 ~~400~~
494	1777850.030 6556864.833	CHEVRON CIL Co #1-8" IN A 12" Csg	69.31	3.25
495	1778033.165 6556845.425	CHEVRON CIL Co #1-8" IN A 12" Csg	68.19	6.50
497	1777924.51 6556660.22	AT&T TELEPHONE FREEWAY CROSSOVER	66.86	3.17
498	1778210.71 6556845.19	CHEVRON CIL Co #1-8" IN A 12" Csg	65.11	4.00
499	1777926.04 6556657.83	TIME WARNER TV CABLE FREEWAY CROSSOVER	66.95	3.67

U-4

POTHOLE No.	NORTHING/EASTING	UTILITY COMPANY	SURFACE/GROUND ELEVATION (ft)	DEPTH (ft)
29	1778342.62 6555642.81	12" Ø Stl (WATER LINE)	59.14	5.00
30	1778478.27 6555730.13	12" Ø Stl (WATER LINE)	64.17	4.67

U-6

POTHOLE No.	NORTHING/EASTING	UTILITY COMPANY	SURFACE/GROUND ELEVATION (ft)	DEPTH (ft)
31	1779148.86 6554398.23	20" Ø Conc (SEWER LINE)	67.36	13.00
32	1779277.40 6554481.25	20" Ø Conc (SEWER LINE)	67.64	13.50
35	1779323.78 6554434.03	10" Ø Stl UNKNOWN LINE (LOOKING FOR GAS LINE)	61.50	6.00
37	1779506.93 6553837.53	6" Ø Stl (GAS LINE)	65.40	5.17
38	1779634.68 6553919.92	6" Ø Stl (GAS LINE)	64.98	2.00

U-7

POTHOLE No.	NORTHING/EASTING	UTILITY COMPANY	SURFACE/GROUND ELEVATION (ft)	DEPTH (ft)
50	1780185.22 6553070.10	4" Ø (ACD) CONCERTE CASING (Tel)	62.78	4.67
51	1780020.74 6552977.00	6" Ø PVC (GIP)	63.49	4.17
51A	1780033.92 6552961.01	12" Ø WIDE CONCRETE CASING (GIP)	63.31	2.00
300	1779707.422 6552686.873	KINDER MORGAN 10" OIL	61.20	5.17
301	1779712.894 6552691.485	SPRINT BURRIED TELEPHONE (B.T.)	61.25	3.25
302	1779715.570 6552693.085	LEVEL-3 BURRIED TELECOMM CABLE	61.41	4.25
303	1779719.685 6552694.931	KINDER MORGAN 16"OIL	61.80	3.75
304	1779724.522 6552698.318	LEVEL-3 TELECOMM CABLE	62.06	2.00
305	1779746.07 6552705.74	QWEST/GST/MFS BURRIED TELEPHONE (B.T.)	62.06	5.00
306	1779765.703 6552718.907	CITY OF CERRITOS WATER	62.35	7.08
308	1779666.943 6552750.305	KINDER MORGAN 10" OIL	60.62	5.42
309	1779670.661 6552751.840	SPRINT BURRIED TELEPHONE (B.T.)	60.94	3.17
310	1779674.860 6552753.481	LEVEL-3 BURRIED TELECOMM CABLE	60.98	4.33
311	1779680.150 6552755.767	KINDER MORGAN 16"OIL	61.26	4.58
312	1779685.695 6552758.878	LEVEL-3 TELECOMM CABLE	61.79	2.33
313	1779706.40 6552768.01	QWEST/GST/MFS BURRIED TELEPHONE (B.T.)	61.96	5.00
314	1779727.295 6552776.816	CITY OF CERRITOS WATER	61.93	7.00
483	1779654.291 6552741.942	UNITED PARADYNE 8" NAVY JET FUEL	60.46	3.67
484	1779693.736 6552681.509	UNITED PARADYNE 8" NAVY JET FUEL	60.62	5.17

2 **REPLACE PER ADDENDUM No. 2 DATED MARCH 30, 2016**

UTILITY PLAN
(EXISTING UTILITIES)
(POTHOLE TABLE)

U-12

REVISED BY | DATE REVISED
BIJAN PIRZADEH | ZEWDIE BURKA
CALCULATED-DESIGNED BY | CHECKED BY
FUNCTIONAL SUPERVISOR | CELINA AVILES

STATE OF CALIFORNIA - DEPARTMENT OF TRANSPORTATION
Caltrans® OFFICE OF DESIGN A

LAST REVISION 00-00-00 | DATE PLOTTED => 25-MAR-2016 | TIME PLOTTED => 13:40

Dist	COUNTY	ROUTE	POST MILES TOTAL PROJECT	SHEET No.	TOTAL SHEETS
07	LA,Ora	5	0.0/1.5, 44.3/44.4	656	1622

REGISTERED CIVIL ENGINEER 4-2-14 DATE

1-25-16
PLANS APPROVAL DATE

REGISTERED PROFESSIONAL ENGINEER H.S. CHEN No. C48908 Exp. 9-30-16 CIVIL STATE OF CALIFORNIA

THE STATE OF CALIFORNIA OR ITS OFFICERS OR AGENTS SHALL NOT BE RESPONSIBLE FOR THE ACCURACY OR COMPLETENESS OF SCANNED COPIES OF THIS PLAN SHEET.

2

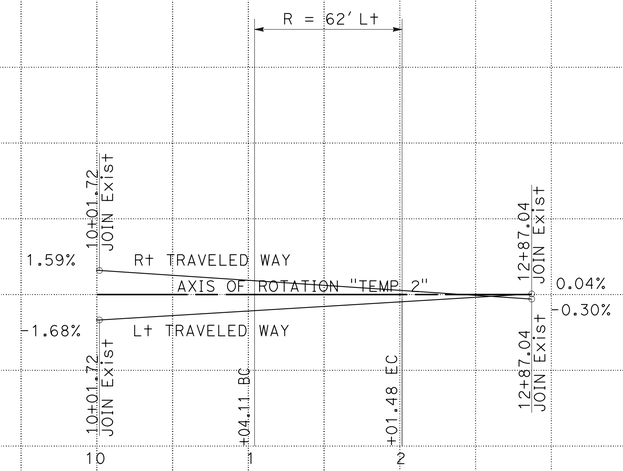

SUPERELEVATION DIAGRAM

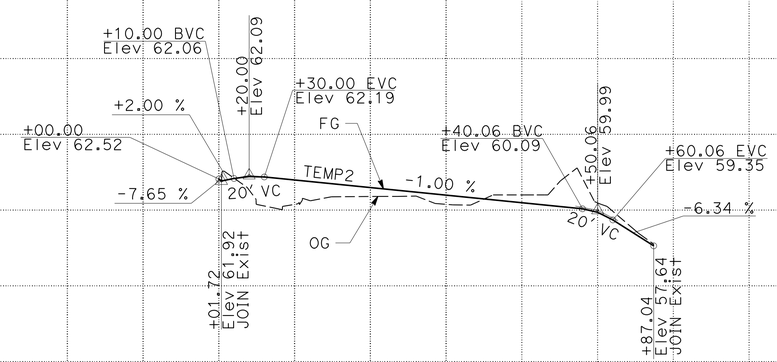

PROFILE
NB DETOUR
"TEMP 2"

2 **ADDED PER ADDENDUM No. 2 DATED MARCH 30, 2016**

STAGE CONSTRUCTION DETAILS PROFILE AND SUPERELEVATION DIAGRAM

SCALE: Horiz 1" = 50'
Vert 1" = 5'

SCD-3

STATION		10	1	2	3	TOTAL
CY	Exc	471				471
	Emb	0				0

REVISED BY | DATE REVISED
KHANH NGUYEN | KENNY HA
CALCULATED-DESIGNED BY | CHECKED BY
FUNCTIONAL SUPERVISOR: RICHARD CHIANG
STATE OF CALIFORNIA - DEPARTMENT OF TRANSPORTATION
Caltrans DESIGN

LAST REVISION 00-00-00 | DATE PLOTTED => 25-MAR-2016 | TIME PLOTTED => 11:14